NORTH AMERICA
Price List

Effective April 2025

All prices noted in this price list are in US Dollars.

GESSI THE PRIVATE WELLNESS COMPANY®

GESSI

THE GESSI OASIS.

A "GREEN" INDUSTRIAL PARK



Design today need not only be aesthetics, ergonomics, functionality and ability to industrialize the product; it should also take account of the values and concerns of society: **the environment, energy resources, new dwelling customs, new individual and collective needs**.

Gessi has long engaged in a very accurate study of innovative, timeless designs and new housing concepts for tomorrow's dwellings to be invariably proposed at every season - relying on the use of highest quality materials and the time-honoured tradition of meticulous Italian craftsmanship. The same level of accuracy is used in its search for technical and technological solutions so as to obtain safe and sustainable products and processes.

Gessi purports to be a '***special place***' where out-of-the-ordinary fantasies come true.
The new Gessi Park originates from this very idea. It was designed as a special, oasis-like production complex that combines functionality and efficiency with beauty, eco-friendliness and worker-friendliness. **The Park layout mixes industrial** and landscape eco-architecture, technology and design, all harmoniously integrated in the territory. This provides a perfect setting for seamless production processes where products meant for worldwide exportation are manufactured with the use of state-of-the art technologies and zero environmental impact.



The green design of the Park is just an aspect of the overall project whose ***environmental sustainability*** rests with technically advanced, ecologically responsible and industrially unparalleled if not unique system solutions.



These solutions span from natural lighting and ventilation apparatuses through indoor quality control to highly efficient conditioning and heating systems including, inter alia, systems recovering and reusing the heat produced; all devices are designed with the utmost attention to energy efficiency and abatement of polluting emissions into the atmosphere.
Gessi is the first company in Europe to have developed pilot **plants for recycling** almost all of the water employed in production processes, e.g. systems for the drainage of underground water and its reuse for irrigation, systems for process-water collection, purification and recycling, etc. The Company has also deployed on a 4 ha surface one of the most innovative and advanced rooftop **solar photovoltaic generation systems**, which came into operation at the end of 2010 and will produce clean energy while avoiding thousands of tons of CO2 to be released into the atmosphere.



The commitment to optimise processes and minimise wastes and inefficiencies involves each level of the Organization through an Integrated ***Quality and Environmental Management System.***
Environment protection is a concern since the very early stages of development of any product or process project; Gessi considers it a mission towards its clients and a commitment to create a mindset for everyone to embrace environment minded behaviours and choices.





After all, for Gessi Innovation means not only inventing new aesthetic solutions but also, and more importantly, meeting dreams and needs, including those of generations to come, with new technologies, new production processes and new materials. Along with **design uniqueness and technology**, the real added value of the Gessi brand is indeed its **content of poetry** and **respect for the world**.

PRODUCT CERTIFICATION STANDARDS

GESSI IN THE WORLD Gessi believes strongly in maintaining a compassionate responsibility to the environment and humane treatment of its employees. This vision has helped establish Gessi as a world leader in developing and encouraging new forms of humane capitalism.
Gessi also takes great pride in implementing sophisticated manufacturing techniques in its quest to preserve balance and focus in creating fashionable collections of luxury kitchen and bath faucets, matching accessories, decorative sinks and mirrors.
At its very core, Gessi sees itself as a socially and environmentally responsible company.

Gessi the ethical company, attentive to quality, employees and the environment.
Employing advanced technology, and sometimes inventing its own new processes, adhering to its own strict policies, often far beyond regulations, every day Gessi affirms its goal of preserving the environment, manufacturing creations of unparalleled quality and promoting a healthy workplace.
These is what Gessi strives for, in the belief these values should be shared by all those who want to foster a culture of the product that goes beyond simple appearances.

Certificate Management System: Environment



Gessi has been for years on the forefront of “green” production; in fact the Company has since long engaged in very serious R&D aimed at introducing technological or technical solutions in its products and processes, whose goal is the to minimize resources consumption and the overall impact on the environment, while still preserving outstanding aesthetics and proposing innovative designs at every new season.

Certificate Management System: Safety



ICIM

CERTIFICATO N. 0046L/4
CERTIFICATE No.

GESSI S.P.A.

Sede e Unità Operative
Parco Gessi - Fraz. Vintebbio - 13037 Serravalle Sesia (VC) – Italia
Progettazione, acquisti, produzione

Unità Operativa
Via Marconi, 27/A - Frazione Vintebbio - 13037 Serravalle Sesia (VC) - Italia
Direzione, commerciale, HR, produzione.

UNI ISO 45001:2018

EA: 19 - 14 - 17 - 35

Progettazione e produzione di rubinetteria sanitaria ed accessori da bagno, mediante processi di fusione metalli, lavorazioni meccaniche, saldatura, stampaggio plastica, trattamenti di finitura superficiale, assemblaggio e confezionamento; produzione di espositori ed allestimenti per stand; esposizione arredi da bagno e cucina.

Design and manufacturing of sanitary taps and bathroom accessories, using metal casting processes, mechanical processing, welding, injection moulding, surface finishing treatments, assembly and packaging; production of displays and set-up for stands, bathroom and kitchen furniture exhibition.

30/09/2009 | 23/09/2022 | 29/09/2024

ICIM S.p.A.

ACCREDIA

IQNET

Building trust together

Certificate

CISQ/ICIM S.P.A. has issued an IQNet recognized certificate that the organization:

GESSI S.P.A.
Head Office and Operative Unit
Parco Gessi - Fraz. Vintebbio – I-13037 Serravalle Sesia (VC)
Operative Unit
Via Marconi, 27/A - Frazione Vintebbio – I-13037 Serravalle Sesia (VC)

has implemented and maintains a

Occupational Health and Safety Management System

for the following scope:

Design and manufacturing of sanitary taps and bathroom accessories, using metal casting processes, mechanical processing, welding, injection moulding, surface finishing treatments, assembly and packaging; production of displays and set-up for stands, bathroom and kitchen furniture exhibition.

which fulfils the requirements of the following standard:

ISO 45001:2018

Issued on: 2022-08-23
First issued on: 2009-09-30
Expires on: 2024-09-29

This attestation is directly linked to the IQNet Partner's original certificate and shall not be used as a stand-alone document.

Registration Number: IT-53943

Alex Stoichitoiu
President of IQNET

Mario Romeroi
President of CISQ

CISQ

The production philosophy of Gessi sets people at the centre of its ideal system as it pursue a concept of "total overall quality" of its processes, products and working conditions. The Company is also extremely attentive to safety and comfort of the environment where it's people work.

Certificate Management System: Quality



ICIM

CERTIFICATO N. ICIM-9001-000669-09
CERTIFICATE No.

GESSI S.P.A.

Parco Gessi - Fraz. Vintebbio 13037 Serravalle Sesia VC IT - Italia

UNI EN ISO 9001:2015

EA: 18 - 14 - 35 - 17

Progettazione e produzione di rubinetteria sanitaria ed accessori da bagno mediante lavorazioni meccaniche, saldatura, stampaggio plastica, trattamenti galvanici e di verniciatura, assemblaggio e confezionamento. Produzione di espositori ed allestimenti per stand.

Design and production of sanitary fittings and bathroom accessories through machinings, welding, injection moulding, galvanic treatments and painting, assembling and packaging. Display and stand mounting production.

16/12/1996 | 11/12/2023 | 10/12/2026

ICIM S.p.A.

ACCREDIA

IQNET

Building trust together

Certificate

CISQ/ICIM S.P.A. has issued an IQNET recognized certificate that the organization:

GESSI S.P.A.
Parco Gessi - Fraz. Vintebbio 13037 Serravalle Sesia VC IT - Italia
For Operative Units see Annex / Annexes

has implemented and maintains a/an

Quality Management System

for the following scope:

Design and production of sanitary fittings and bathroom accessories through machinings, welding, injection moulding, galvanic treatments and painting, assembling and packaging. Display and stand mounting production.

which fulfils the requirements of the following standard:

ISO 9001:2015

Issued on: 2023-12-11
First issued on: 1996-12-16
Expires on: 2026-12-10

Registration Number:
IT-4204 ICIM-9001-000669-09

Alex Stoichitoiu
President of IQNET

Mario Romeroi
President of CISQ

CISQ

The added value of a genuine, integrally "Made in Italy – Made in Gessi" production, is apparent of Gessi's creations.

COLLECTION









GESSI®
EMPORIO





RETTANGOLO K



GESSI316
FLESSA



RETTANGOLO



INVERSO



HABITO
UNITO



ORIGINI







GESSI316
TRAME



GOCCIA





HABITO
INTRECCIO



	Chrome	Mirror Steel	Chrome Brushed	Nickel PVD	Finox Brushed Nickel	Steel Brushed	Black Metal PVD	Black Metal Brushed PVD	Copper PVD	Copper Brushed PVD	Gold CCP	Gold Brushed CCP	Gold PVD	Gold Brushed PVD	Brass PVD	Brass Brushed PVD	Warm Bronze PVD	Warm Bronze Brushed PVD	Dark Bronze	Antique Brass	Aged Bronze	Black Metal GHRC	Black Metal Brushed GHRC	Copper GHRC	Copper Brushed GHRC	Matte Black	Matte White	Matte Greige	Matte Cipria	Glossy Ocra	Glossy Coral	Matte Agave	Matte Ocra	Matte Coral	Corten
	#031	**#238**	**#147**	**#720**	**#149**	**#239**	**#706**	**#707**	**#030**	**#708**	**#080**	**#087**	**#246**	**#716**	**#710**	**#727**	**#735**	**#726**	**#845**	**#713**	**#187**	**#124**	**#126**	**#123**	**#125**	**#299**	**#279**	**#273**	**#275**	**#277**	**#278**	**#276**	**#280**	**#281**	**#856**
INVERSO	•			•	•		•	•	•	•					•	•	•	•	•							•									
VENTAGLIO	•			•	•		•	•	•	•					•	•	•	•	•							•									
ORIGINI	•			•	•		•	•		•						•		•	•							•		•	•	•	•	•	•	•	
HABITO	•				•		•	•		•					•	•	•	•	•							•									
VENTI20	•			•	•		•	•	•	•					•	•	•	•		•	•					•									
ANELLO	•			•	•		•	•	•	•					•	•	•	•		•	•					•									
INGRANAGGIO	•			•	•		•	•	•	•					•	•	•	•		•	•					•									
GESSI316						•		•		•						•		•								•									
INCISO	•			•	•		•	•	•	•			•		•	•	•	•	•	•	•					•									
RETTANGOLO K	•			•	•		•	•	•	•																•									
RETTANGOLO	•			•	•		•	•	•	•																•									
RILIEVO	•			•	•		•	•	•	•					•	•	•	•								•	•								
GOCCIA	•																					•	•	•	•	•	•								
HI-FI	•			•	•		•	•	•	•			•		•	•	•	•	•	•	•					•									
HI-FI ECLECTIC	•			•	•		•	•	•	•			•		•	•	•	•	•	•	•					•									
AFILO		•		•		•	•	•	•	•			•		•	•	•	•		•	•					•	•								
MINIMALI/COLOUR		•		•		•	•	•	•	•			•		•	•	•	•		•	•					•									
TREMILLIMETRI		•		•		•	•	•	•	•	•	•	•		•	•	•	•		•	•					•									
CASCATA	•			•	•		•	•	•	•	•		•		•	•	•	•		•	•					•	•								
OUTDOOR						•																				•									•
SPOTWATER	•			•	•		•	•	•	•	•		•		•	•	•	•		•	•					•	•								
SPOTWATER316						•		•		•						•		•								•									
SHOWER G	•		•	•	•		•	•	•	•	•	•	•	•	•	•	•	•	•	•	•					•									
VIA MANZONI	•				•																					•									
VIA TORTONA	•				•																					•									

Rough Valves in stock (except Private Wellness shower systems consider 6-8 weeks lead time)

Standard finishes (031, 149, 239, 238, 299 and 279) consider 6-8 weeks lead time

PVD, GHRC, 713, 187, 845, 273, 275, 276, 277, 280, 278, 281 and special order consider 10-12 weeks lead time



031 Chrome



147 Chrome Brushed



149 Finox Brushed Nickel



080 Gold CCP



087 Gold CCP Brushed



238 Mirror Steel



239 Steel Brushed



713 Antique Brass



187 Aged Bronze



845 Dark Bronze



856 Corten



299 Matte Black

279 Matte White



030 Copper PVD



706 Black Metal PVD



735 Warm Bronze PVD



246 Gold PVD



710 Brass PVD



720 Nickel PVD



708 Copper Brushed PVD



707 Black Metal brushed



726 Warm Bronze Brushed PVD



716 Gold Brushed



727 Brass Brushed PVD



123 Copper GHRC



125 Copper Brushed GHRC



124 Black Metal GHRC



126 Black Metal Brushed GHRC

273 Matte Greige



275 Matte Cipria



276 Matte Agave



277 Glossy Ocra
280 Matte Ocra



278 Glossy Coral
281 Matte Coral

FLEXIBLE FINISHES

01637

59” flex hose with conic 1/2" connections.

031 Chrome
Flex Color: Chrome



147 Chrome Brushed
Flex Color: Chrome



149 Finox
Flex Color: Nickel



720 Nickel PVD
Flex Color: Nickel



030 Copper PVD
Flex Color: Copper



708 Copper Brushed PVD
Flex Color: Copper



706 Black Metal PVD
Flex Color: Black



707 Black Metal Brushed PVD
Flex Color: Black



187 Aged Bronze
Flex Color: Black



713 Antique Brass
Flex Color: Black



845 Dark Bronze
Flex Color: Black



299 Matte Black
Flex Color: Black



080 Gold CCP
Flex Color: Gold



087 Gold Brushed CCP
Flex Color: Gold



710 Brass PVD
Flex Color: Gold



735 Warm Bronze PVD
Flex Color: Bronze



246 Gold PVD
Flex Color: Gold



727 Brass Brushed PVD
Flex Color: Gold



726 Warm Bronze Brushed PVD
Flex Color: Bronze



279 Matte White
Flex Color: White



BATHROOM

INVERSO RIGATO	pag.	51
INVERSO DIAMANTATO	pag.	63
INVERSO BATH&SHOWER	pag.	75
INVERSO ACCESSORIES	pag.	87
INVERSO TOTAL LOOK	pag.	99
VENTAGLIO	pag.	103
VENTAGLIO ACCESSORIES	pag.	125
VENTAGLIO TOTAL LOOK	pag.	135
ORIGINI	pag.	139
ORIGINI ACCESSORIES	pag.	177
ORIGINI TOTAL LOOK	pag.	187
GESSI316 FLESSA	pag.	189
GESSI316 TRAME	pag.	199
GESSI316 INTRECCIO	pag.	207
GESSI316 MECCANICA	pag.	215
GESSI316 CESELLO	pag.	223
GESSI316 BATH&SHOWER	pag.	231
GESSI316 ACCESSORIES	pag.	255
GESSI316 TOTAL LOOK	pag.	265
INCISO -	pag.	269
INCISO +	pag.	287
INCISO BATH&SHOWER	pag.	299
INCISO ACCESSORIES	pag.	309
INCISO TOTAL LOOK	pag.	319
VENTI20	pag.	323
VENTI20 ACCESSORIES	pag.	345
VENTI20 TOTAL LOOK	pag.	355
ANELLO	pag.	359
ANELLO ACCESSORIES	pag.	385
ANELLO TOTAL LOOK	pag.	395
INGRANAGGIO	pag.	399
INGRANAGGIO ACCESSORIES	pag.	425
INGRANAGGIO TOTAL LOOK	pag.	435
HABITO UNITO	pag.	439
HABITO TRAME	pag.	449
HABITO INTRECCIO	pag.	457
HABITO RIGATO	pag.	465
HABITO DIAMANTATO	pag.	473
HABITO CESELLO	pag.	481
HABITO BATH&SHOWER	pag.	489
HABITO ACCESSORIES	pag.	505
HABITO TOTAL LOOK	pag.	515
RETTANGOLO K	pag.	519
RETTANGOLO	pag.	527
RETTANGOLO BATH&SHOWER	pag.	535
RETTANGOLO ACCESSORIES	pag.	547
RETTANGOLO TOTAL LOOK	pag.	559

GOCCIA pag. 563
GOCCIA ACCESSORIES pag. 579
GOCCIA TOTAL LOOK pag. 589
RILIEVO pag. 593
RILIEVO ACCESSORIES pag. 609
RILIEVO TOTAL LOOK pag. 619

PRIVATE WELLNESS

HEADSHOWER SECTION pag. 621
HI-FI pag. 635
HI-FI ORIGINI pag. 651
HI-FI ECLECTIC pag. 655
AFILO pag. 665
MINIMALI pag. 683
COLOUR pag. 695
TREMILLIMETRI pag. 703
SPOTWATER316 pag. 707
SPOTWATER pag. 719
CASCATA pag. 723
BODY JETS pag. 725
HANDSHOWER SETS pag. 729
SHOWER G SWING SYSTEM RIGATO pag. 739
SHOWER G SWING SYSTEM DIAMANTATO pag. 745
SHOWER G ACCESSORIES pag. 749
SHOWER G DRAINS pag. 757
OUTDOOR pag. 761

TOTAL LOOK

FLUSH PLATES pag. 767
TOTAL LOOK pag. 771

SENSOR TAPS

SENSOR TAPS pag. 777

HOME DECOR

HOME VASES pag. 793

EMPORIO

VIA MANZONI pag. 807
VIA TORTONA pag. 813
EMPORIO SHOWER pag. 819
EMPORIO ACCESSORIES pag. 827

TECHNICAL ACCESSORIES

DRAINS pag. 833
TECHNICAL ACCESSORIES pag. 837

SERIES	DESCRIPTIONS	CODE	CSA	CEC	DOE	CALGREEN	EPA WATERSENSE	MASSA-CHUSSETS	PAGE
DRAINS	1 1/4" syphon	01005	-	-	-	-	-	-	836
VENTAGLIO ORIGINI TOTAL LOOK DRAINS	Grille free-flow waste	01314	-	-	-	-	-	-	137, 188, 775, 835
GOCCIA TOTAL LOOK	1 1/4" pish drain with or without overflow waste	01315	-	-	-	-	-	-	592, 775
INVERSO VENTAGLIO INCISO VENTI20 ANELLO INGRANAGGIO HABITO RETTANGOLO RILIEVO TOTAL LOOK DRAINS	1 1/4" push drain with or without overflow feature	01427	-	-	-	-	-	-	101, 137, 321, 357, 397, 437, 517, 561, 620, 775, 835
INVERSO VENTAGLIO GESSI316 INCISO VENTI20 ANELLO INGRANAGGIO HABITO RETTANGOLO TOTAL LOOK	Undermounted washbasin brackets for 54601, 54605, 54606.	01578	-	-	-	-	-	-	101, 136, 267, 320, 356, 396, 436, 517, 561, 772
INVERSO VENTAGLIO ORIGINI GESSI316 INCISO VENTI20 ANELLO INGRANAGGIO HABITO RETTANGOLO GOCCIA RILIEVO EMPORIO SHOWER	59" flex hose	01637	CSA	-	-	-	-	MASS	86, 124, 175, 253, 307, 344, 384, 423, 504, 545, 578, 608, 826
AFILO MINIMALI COLOUR TREMILLIMETRI	Roller + rod kit for shower head maintenance	01710	-	-	-	-	-	-	681, 694, 702, 705
AFILO COLOUR	Optional kit capacitive keyboard for chromotherapy control with IP connector.	01720	-	-	-	-	-	-	680, 701
AFILO COLOUR	Optional kit connectors for more control units for ceiling-mounted shower systems	01722	-	-	-	-	-	-	680, 701
AFILO COLOUR	Power supply CE 30 Watt DIN Rail. Input voltage 100-240VAC. Output voltage 12VDC.	01723	-	-	-	-	-	-	679, 700
INVERSO VENTAGLIO ORIGINI INCISO VENTI20 ANELLO INGRANAGGIO HABITO RETTANGOLO GOCCIA RILIEVO EMPORIO SHOWER	Metal flexible hose, 59" length, 1/2" connector.	01724	CSA	-	-	-	-	MASS	86, 124, 175, 307, 344, 384, 423, 504, 545, 578, 608, 826
OUTDOOR	Cover for Outdoor Column 63204	01725	-	-	-	-	-	-	766
DRAINS	Pop up drain assembly less pop up rod and knob	01781	CSA	CEC	DOE	-	-	MASS	836
TECHNICAL ACCESSORIES	0 - 1" height extension	09251	-	-	-	-	-	-	841
EMPORIO SHOWER	In-wall thermostatic rough valve for 1/2/3-way diverter function	09270	CSA	-	-	-	-	MASS	820, 821
INVERSO VENTAGLIO ORIGINI INCISO INCISO VENTI20 ANELLO INGRANAGGIO HABITO RILIEVO EMPORIO SHOWER	In-wall single exit pressure balance rough valve	09272	CSA	-	-	-	-	MASS	60, 72, 114, 164, 281, 293, 334, 372, 412, 493, 603, 821

GESSI

SERIES	DESCRIPTIONS	CODE	CSA	CEC	DOE	CALGREEN	EPA WATERSENSE	MASSA-CHUSSETS	PAGE
INVERSO VENTAGLIO ORIGINI INCISO INCISO VENTI20 ANELLO INGRANAGGIO HABITO RILIEVO EMPORIO SHOWER	In-wall pressure balance rough valve with 2-way diverter	09274	CSA	-	-	-	-	MASS	60, 72, 114, 164, 281, 293, 335, 373, 412, 494, 603, 822
INVERSO VENTAGLIO VENTAGLIO ORIGINI ORIGINI INCISO INCISO INCISO INCISO VENTI20 VENTI20 ANELLO ANELLO INGRANAGGIO INGRANAGGIO HABITO HABITO HABITO HABITO RETTANGOLO RETTANGOLO GOCCIA GOCCIA RILIEVO RILIEVO	In-wall thermostatic rough valve for 1/2/3-way diverter function	09279	CSA	-	-	-	-	MASS	58, 59, 70, 71, 109, 110, 162, 163, 279, 280, 291, 292, 333, 334, 368, 369, 407, 408, 490, 491, 492, 493, 536, 537, 570, 571, 601, 602
TECHNICAL ACCESSORIES	1" - 2" height extension	09281	-	-	-	-	-	-	841
RETTANGOLO	Tall single lever washbasin mixer with pop-up assembly	11955	CSA	CEC	DOE	CAL	EPA	MASS	528
RETTANGOLO	Tall single lever washbasin mixer with pop-up assembly	11971	CSA	CEC	DOE	CAL	EPA	MASS	528
VENTAGLIO GESSI316 INCISO VENTI20 ANELLO INGRANAGGIO HABITO BODY JETS	Pivotable body spray	13375	CSA	CEC	DOE	-	-	MASS	121, 250, 304, 342, 381, 420, 501, 728
INVERSO VENTAGLIO ORIGINI INCISO ANELLO INGRANAGGIO HABITO RETTANGOLO GOCCIA RILIEVO	Antilimestone handshower	14370	CSA	CEC	DOE	-	-	MASS	85, 123, 174, 306, 383, 422, 503, 544, 577, 607
INCISO ANELLO INGRANAGGIO HABITO	Handshower	14371	CSA	CEC	DOE	-	-	MASS	306, 383, 422, 503
INVERSO VENTAGLIO ORIGINI INCISO RILIEVO EMPORIO SHOWER	Handshower	14372	CSA	CEC	DOE	-	-	MASS	85, 123, 174, 306, 607, 825
INVERSO VENTAGLIO ORIGINI INCISO ANELLO INGRANAGGIO HABITO RETTANGOLO GOCCIA RILIEVO	Handshower with white insert	14376	CSA	CEC	DOE	-	-	MASS	85, 124, 175, 307, 383, 423, 503, 544, 577, 607
INVERSO RETTANGOLO	Wall-mounted adjustable and antilimestone showerhead 11-13/16" X 11-13/16"	15185	CSA	CEC	DOE	-	-	MASS	81, 541
INVERSO RETTANGOLO	Ceiling-mounted adjustable and antilimestone showerhead 11-13/16" X 11-13/16"	15186	CSA	CEC	DOE	-	-	MASS	82, 541
VIA TORTONA	Single lever washbasin mixer with pop-up assembly	18601	CSA	CEC	DOE	-	-	MASS	814
VIA TORTONA	Single lever washbasin mixer without pop-up assembly	18602	CSA	CEC	DOE	-	-	MASS	814

SERIES	DESCRIPTIONS	CODE	CSA	CEC	DOE	CALGREEN	EPA WATERSENSE	MASSA-CHUSSETS	PAGE
VIA TORTONA	Tall single lever washbasin mixer without pop-up assembly	18604	CSA	CEC	DOE	-	-	MASS	814
VIA TORTONA	Tall single lever washbasin mixer without pop-up assembly	18606	CSA	CEC	DOE	-	-	MASS	814
VIA TORTONA	Widespread washbasin mixer with pop-up assembly	18611	CSA	CEC	DOE	CAL	-	MASS	815
VIA TORTONA	Widespread washbasin mixer without pop-up assembly	18614	CSA	CEC	DOE	CAL	-	MASS	815
VIA TORTONA	Three-hole roman tub set	18637	CSA	CEC	DOE	-	-	MASS	816
VIA TORTONA	External parts mixer one-way diverter	19712	-	-	-	-	-	-	816
RETTANGOLO	External parts mixer one-way diverter	20119	-	-	-	-	-	-	530
SENSOR TAPS	TRIM PARTS ONLY Wall-mounted electronic mixer with spout	20130	CSA	CEC	DOE	-	-	MASS	789
RETTANGOLO	Handshower sliding rail only	20144	-	-	-	-	-	-	541
RETTANGOLO	Handshower	20154	CSA	CEC	DOE	-	-	MASS	544
RETTANGOLO	TRIM PARTS ONLY External parts for thermostatic with single volume control	20183	CSA	-	-	-	-	MASS	536
RETTANGOLO	TRIM PARTS ONLY External parts for 2-way diverter thermostatic and volume control	20204	CSA	-	-	-	-	MASS	536
RETTANGOLO	TRIM PARTS ONLY External parts for 3-way diverter thermostatic and volume control	20210	CSA	-	-	-	-	MASS	537
GESSI316 ANELLO INGRANAGGIO HABITO RETTANGOLO CASCATA	Wall-fixing cascade spout with separate control (not included)	20293	CSA	-	-	-	-	MASS	233, 382, 421, 502, 543, 724
INVERSO GESSI316 RETTANGOLO CASCATA	Wall-fixing cascade spout with separate control (not included).	20295	CSA	-	DOE	-	-	MASS	83, 251, 543, 724
INVERSO RETTANGOLO	Wall-mounted soap dish, white	20801	-	-	-	-	-	-	88, 548
INVERSO RETTANGOLO	Wall-mounted soap dish, black	20802	-	-	-	-	-	-	88, 548
INVERSO RETTANGOLO	Wall-mounted holder, white	20807	-	-	-	-	-	-	88, 548
INVERSO RETTANGOLO	Wall-mounted holder, black	20808	-	-	-	-	-	-	88, 548
INVERSO RETTANGOLO	Wall-mounted liquid soap dispenser , white	20813	-	-	-	-	-	-	89, 549
INVERSO RETTANGOLO	Wall-mounted liquid soap dispenser - black	20814	-	-	-	-	-	-	89, 549
INVERSO RETTANGOLO	White wall-mounted brush holder	20819	-	-	-	-	-	-	89, 549
INVERSO RETTANGOLO	Black wall-mounted brush holder	20820	-	-	-	-	-	-	89, 549
INVERSO RETTANGOLO	White standing soap holder	20825	-	-	-	-	-	-	90, 550
INVERSO RETTANGOLO	Black standing soap holder	20826	-	-	-	-	-	-	90, 550
INVERSO RETTANGOLO	Standing tumbler holder white	20831	-	-	-	-	-	-	90, 550
INVERSO RETTANGOLO	Standing tumbler holder black	20832	-	-	-	-	-	-	90, 550
INVERSO RETTANGOLO	Standing Soap dispenser white	20837	-	-	-	-	-	-	91, 551
INVERSO RETTANGOLO	Black standing Soap dispenser	20838	-	-	-	-	-	-	91, 551
INVERSO RETTANGOLO	White standing brush holder	20843	-	-	-	-	-	-	91, 551
INVERSO RETTANGOLO	Black standing brush holder	20844	-	-	-	-	-	-	91, 551
INVERSO RETTANGOLO	Wall-mounted tissue holder with cover	20849	-	-	-	-	-	-	92, 552
INVERSO RETTANGOLO	Wall-mounted tissue holder	20855	-	-	-	-	-	-	92, 552
INVERSO RETTANGOLO	Corner shelf	20861	-	-	-	-	-	-	96, 556
INVERSO RETTANGOLO	Wall-mounted column with paper roll holder and white brush holder	20867	-	-	-	-	-	-	92, 552
INVERSO RETTANGOLO	Wall-mounted column with paper roll holder and black brush holder	20868	-	-	-	-	-	-	92, 552
INVERSO RETTANGOLO	Safety grip-handle for bathtub and shower enclosure	20893	-	-	-	-	-	-	98, 560
INVERSO RETTANGOLO	12” towel bar	20897	-	-	-	-	-	-	94, 554
INVERSO RETTANGOLO	18” towel bar	20900	-	-	-	-	-	-	94, 554

GESSI

SERIES	DESCRIPTIONS	CODE	CSA	CEC	DOE	CALGREEN	EPA WATERSENSE	MASSA-CHUSSETS	PAGE
INVERSO RETTANGOLO	24” towel bar	20903	-	-	-	-	-	-	94, 554
INVERSO RETTANGOLO	Towel ring	20909	-	-	-	-	-	-	94, 554
INVERSO RETTANGOLO	Wall-mounted double towel rail	20915	-	-	-	-	-	-	93, 553
RETTANGOLO	Wall-mounted garment hook	20921	-	-	-	-	-	-	555
INVERSO RETTANGOLO	Standing set with paper roll holder and white brush holder	20933	-	-	-	-	-	-	93, 553
INVERSO RETTANGOLO	Standing set with paper roll holder and black brush holder	20934	-	-	-	-	-	-	93, 553
INVERSO RETTANGOLO	Freestanding towel rack	20939	-	-	-	-	-	-	93, 553
INVERSO RETTANGOLO	Shelf 60 cm	20945	-	-	-	-	-	-	97, 556
INVERSO RETTANGOLO	Shelf 30 cm	20947	-	-	-	-	-	-	96, 556
INVERSO RETTANGOLO	Shelf 60 cm	20950	-	-	-	-	-	-	96, 556
INVERSO RETTANGOLO	30 cm towel rail for glass fixing	20961	-	-	-	-	-	-	95, 555
INVERSO RETTANGOLO	45 cm towel rail for glass fixing	20963	-	-	-	-	-	-	95, 555
INVERSO RETTANGOLO	60 cm towel rail for glass fixing	20965	-	-	-	-	-	-	96, 555
INVERSO RETTANGOLO	adjustable magnifying (2x) mirror	20988	-	-	-	-	-	-	97, 557
INVERSO RETTANGOLO	White waste-paper basket	20990	-	-	-	-	-	-	97, 557
INVERSO RETTANGOLO	Black waste-paper basket	20991	-	-	-	-	-	-	97, 557
VIA TORTONA	TRIM PARTS ONLY Floor-mounted tub filler	24943	CSA	CEC	DOE	-	-	MASS	817
RETTANGOLO	TRIM PARTS ONLY Floor-mounted tub filler	24961	CSA	CEC	DOE	-	-	MASS	532
VIA MANZONI	TRIM PARTS ONLY Floor-mounted tub filler	24982	CSA	CEC	DOE	-	-	MASS	811
RETTANGOLO	Single lever washbasin mixer with pop-up assembly	26501	CSA	CEC	DOE	CAL	EPA	MASS	528
RETTANGOLO	Deck-mounted washbasin mixer control	26505	CSA	-	-	-	-	MASS	530
RETTANGOLO	Three-hole roman tub set	26537	CSA	CEC	DOE	-	-	MASS	532
INVERSO RETTANGOLO RETTANGOLO	Ceiling-mounted washbasin spout only	26599	CSA	CEC	DOE	CAL	-	MASS	55, 67, 521, 529
RETTANGOLO	Wall-mounted washbasin spout only	26600	CSA	CEC	DOE	CAL	-	MASS	522, 530
RETTANGOLO	Wall-mounted bath spout	26603	CSA	-	-	-	-	MASS	525, 533
RETTANGOLO HANDSHOWER SETS	Handshower set	26623	CSA	CEC	DOE	-	-	MASS	543, 731
RETTANGOLO HANDSHOWER SETS	Handshower and adjustable sliding rail set	26642	CSA	CEC	DOE	-	-	MASS	541, 736
RETTANGOLO HEADSHOWER SECTION	Wall-mounted adjustable shower head with arm	26648	CSA	CEC	DOE	-	-	MASS	540, 626
RETTANGOLO	Wall elbow with backplate	26669	CSA	-	-	-	-	MASS	544
INVERSO RETTANGOLO BODY JETS	Pivotable body spray	26672	CSA	CEC	DOE	-	-	MASS	83, 542, 727
CASCATA	Deck-mounted bath spout	26691	CSA	-	-	-	-	MASS	724
INVERSO RETTANGOLO RETTANGOLO	Ceiling-mounted washbasin spout only	26699	CSA	CEC	DOE	CAL	-	MASS	55, 67, 521, 529
DRAINS	1 1/4” push drain with or without overflow feature	29048	-	-	-	-	-	-	835
EMPORIO SHOWER	TRIM PARTS ONLY External parts for single exit pressure balance	29673	CSA	-	-	-	-	MASS	821
EMPORIO SHOWER	TRIM PARTS ONLY External parts for pressure balance with 2-way diverter	29674	CSA	-	-	-	-	MASS	822
SENSOR TAPS	TRIMSPARTS ONLY Wall-mounted electronic separate control with temperature and flow rate setting box.	30651	CSA	-	-	-	-	MASS	790
SENSOR TAPS	Electronic separate control with under-basin mixer to regulate flow rate and temperature.	30653	CSA	-	-	-	-	MASS	790
SENSOR TAPS	TRIM PARTS ONLY Ceiling-mounted electronic mixer.	30654	CSA	CEC	DOE	-	-	MASS	791

SERIES	DESCRIPTIONS	CODE	CSA	CEC	DOE	CALGREEN	EPA WATERSENSE	MASSA-CHUSSETS	PAGE
VENTAGLIO ORIGINI GESSI316 INCISO VENTI20 ANELLO INGRANAGGIO HABITO BODY JETS	Round body spray	32971	CSA	CEC	DOE	-	-	MASS	120, 171, 250, 303, 341, 380, 420, 500, 727
INVERSO RETTANGOLO BODY JETS	Square body spray	32973	CSA	CEC	DOE	-	-	MASS	82, 542, 726
INVERSO RETTANGOLO BODY JETS	Rectangular body spray	32975	CSA	CEC	DOE	-	-	MASS	82, 543, 726
VENTAGLIO ORIGINI GESSI316 INCISO VENTI20 ANELLO INGRANAGGIO HABITO BODY JETS	TRIM PARTS ONLY Round in-wall pivotable body spray	32982	CSA	CEC	DOE	-	-	MASS	121, 171, 250, 304, 342, 381, 420, 501, 727
INVERSO RETTANGOLO BODY JETS	TRIM PARTS ONLY Square in-wall pivotable body spray	32984	-	-	-	-	-	-	83, 542, 726
VENTAGLIO ORIGINI GESSI316 INCISO VENTI20 ANELLO INGRANAGGIO HABITO BODY JETS	In-wall rough valve for pivotable body spray 32982	32985	CSA	CEC	DOE	-	-	MASS	121, 171, 250, 304, 342, 381, 420, 501, 727
INVERSO RETTANGOLO BODY JETS	In-wall rough valve for pivotable body spray 32984	32987	-	-	-	-	-	-	83, 542, 726
GOCCIA	External parts for freestanding external bath mixer	33029	-	-	-	-	-	-	569
TREMILLIMETRI	TREMILLIMETRI wall-mounted shower head	33052	CSA	CEC	DOE	-	-	MASS	704
TREMILLIMETRI	TREMILLIMETRI wall-mounted multifunction shower head	33057	CSA	CEC	DOE	-	-	MASS	704
TREMILLIMETRI	TREMILLIMETRI wall-mounted shower head	33062	CSA	CEC	DOE	-	-	MASS	704
TREMILLIMETRI	TREMILLIMETRI wall-mounted multifunction shower head	33064	CSA	CEC	DOE	-	-	MASS	705
INVERSO VENTAGLIO RETTANGOLO RILIEVO HEADSHOWER SECTION	Wall-fixing headshower.	33095	CSA	CEC	DOE	-	-	MASS	79, 119, 540, 604, 622
GOCCIA	TRIM PARTS ONLY Wall-mounted washbasin mixer control	33744	CSA	-	-	-	-	MASS	567
GOCCIA HEADSHOWER SECTION	Wall-mounted shower head	33755	CSA	CEC	DOE	-	-	MASS	576, 625
GOCCIA	TRIM PARTS ONLY External parts for thermostatic with single volume control	33842	CSA	-	-	-	-	MASS	570
GOCCIA	TRIM PARTS ONLY External parts for 2-way diverter thermostatic and volume control	33844	CSA	-	-	-	-	MASS	570
GOCCIA	TRIM PARTS ONLY External parts for 3-way diverter thermostatic and volume control	33846	CSA	-	-	-	-	MASS	571
GOCCIA	Single lever washbasin mixer without pop-up assembly	35201	CSA	CEC	DOE	CAL	-	MASS	564
GOCCIA	Tall single lever washbasin mixer without pop-up assembly	35204	CSA	CEC	DOE	CAL	-	MASS	564
GOCCIA	Tall single lever washbasin mixer without pop-up assembly	35205	CSA	CEC	DOE	CAL	-	MASS	564
GOCCIA	Tall single lever washbasin mixer without pop-up assembly	35209	CSA	CEC	DOE	CAL	-	MASS	564
GOCCIA	Tall single lever washbasin mixer without pop-up assembly	35210	CSA	CEC	DOE	CAL	-	MASS	565
GOCCIA	TRIM PARTS ONLY .Wall mounted single lever washbasin mixer	35284	CSA	CEC	DOE	CAL	-	MASS	567
GOCCIA	TRIM PARTS ONLY .Wall mounted single lever washbasin mixer	35286	CSA	CEC	DOE	CAL	-	MASS	568
GOCCIA	In wall rough valve only for wall mounted washbasin mixer trim kit.	35287	CSA	CEC	DOE	CAL	-	MASS	567, 568
GOCCIA	Ceiling-mounted washbasin spout only	35299	CSA	CEC	DOE	CAL	-	MASS	565
GOCCIA	Deck-mounted washbasin mixer control	35300	CSA	-	-	-	-	MASS	566
GOCCIA HANDSHOWER SETS	Handshower sliding rail set	35342	CSA	CEC	DOE	CAL	-	MASS	576, 736
GOCCIA	Wall-mounted washbasin mixer control rough valve	35344	CSA	-	-	-	-	MASS	567
GOCCIA HEADSHOWER SECTION	Ceiling-mounted shower head	35351	CSA	CEC	DOE	CAL	-	MASS	576, 633

GESSI

SERIES	DESCRIPTIONS	CODE	CSA	CEC	DOE	CALGREEN	EPA WATERSENSE	MASSA-CHUSSETS	PAGE
GOCCIA HEADSHOWER SECTION	Ceiling-mounted shower head	35353	CSA	CEC	DOE	CAL	-	MASS	576, 633
GOCCIA HANDSHOWER SETS	Handshower set	35373	CSA	CEC	DOE	-	-	MASS	577, 731
GOCCIA	Ceiling-mounted washbasin spout only	35399	CSA	CEC	DOE	CAL	-	MASS	566
GOCCIA	Wall-mounted soap dish, white	38001	-	-	-	-	-	-	580
GOCCIA	Wall-mounted soap dish, black	38002	-	-	-	-	-	-	580
GOCCIA	Wall-mounted holder, white	38007	-	-	-	-	-	-	580
GOCCIA	Wall-mounted holder, black	38008	-	-	-	-	-	-	580
GOCCIA	Wall-mounted liquid soap dispenser , white	38013	-	-	-	-	-	-	581
GOCCIA	Wall-mounted liquid soap dispenser - black	38014	-	-	-	-	-	-	581
GOCCIA	Wall-mounted brush holder, white	38019	-	-	-	-	-	-	581
GOCCIA	Wall-mounted brush holder, black	38020	-	-	-	-	-	-	581
GOCCIA	Standing soap holder, white	38025	-	-	-	-	-	-	582
GOCCIA	Standing soap holder, black	38026	-	-	-	-	-	-	582
GOCCIA	Standing tumbler holder, white	38034	-	-	-	-	-	-	582
GOCCIA	Standing tumbler holder, black	38035	-	-	-	-	-	-	582
GOCCIA	Standing soap dispenser holder, white	38037	-	-	-	-	-	-	583
GOCCIA	Standing soap dispenser holder, black	38038	-	-	-	-	-	-	583
GOCCIA	White GRES standing brush holder	38043	-	-	-	-	-	-	583
GOCCIA	Black GRES standing brush holder	38044	-	-	-	-	-	-	583
GOCCIA	Wall-mounted tissue holder with cover	38049	-	-	-	-	-	-	584
GOCCIA	Wall-mounted tissue holder	38055	-	-	-	-	-	-	584
GOCCIA	White GRES Standing set with paper roll holder and brush holder	38067	-	-	-	-	-	-	584
GOCCIA	Black GRES Standing set with paper roll holder and brush holder	38068	-	-	-	-	-	-	584
GOCCIA	12” towel bar	38097	-	-	-	-	-	-	586
GOCCIA	18” towel bar	38100	-	-	-	-	-	-	586
GOCCIA	24” towel bar	38103	-	-	-	-	-	-	586
GOCCIA	Towel ring	38109	-	-	-	-	-	-	586
GOCCIA	Garment hook	38121	-	-	-	-	-	-	587
GOCCIA	Ceiling mounted towel bar, 24’ 3/16” wide X 63” long	38143	-	-	-	-	-	-	585
GOCCIA	Ceiling mounted towel bar, 18”-1/4” wide X 63” long	38144	-	-	-	-	-	-	585
GOCCIA	White GRES waste-paper basket	38177	-	-	-	-	-	-	587
GOCCIA	Black GRES waste-paper basket	38178	-	-	-	-	-	-	587
GOCCIA	Stool, white Gres	38181	-	-	-	-	-	-	587
GOCCIA	Stool, black Gres	38182	-	-	-	-	-	-	588
VIA MANZONI VIA TORTONA	Built-in part for mixer one-way diverter	38315	-	-	-	-	-	-	809, 816
VIA MANZONI VIA TORTONA	Floor-mounted tub filler in-floor rough valve	38379	CSA	CEC	DOE	-	-	MASS	811, 817
VIA MANZONI	Built-in part basin mixer with spout	38497	-	-	-	-	-	-	810
VIA MANZONI	External parts mixer one-way diverter	38722	-	-	-	-	-	-	809
VIA MANZONI	Wall-mounted bath spout	38725	CSA	-	-	-	-	MASS	810
HEADSHOWER SECTION EMPORIO SHOWER	Wall-mounted adjustable shower head with arm	38763	CSA	CEC	DOE	-	-	MASS	629, 823
HEADSHOWER SECTION EMPORIO SHOWER	Wall-mounted adjustable multi-function shower head with arm	38765	CSA	CEC	DOE	-	-	MASS	629, 824
VIA TORTONA	Wall-mounted spout only	38780	CSA	CEC	DOE	-	-	MASS	815
VIA TORTONA	Wall-mounted spout only	38783	CSA	-	-	-	-	MASS	815
VIA TORTONA	Wall mounted Bath spout only	38785	CSA	-	DOE	-	-	MASS	816
VIA TORTONA	Wall mounted Bath spout only	38787	CSA	-	DOE	-	-	MASS	817
EMPORIO SHOWER	TRIM PARTS ONLY External parts for thermostatic with single volume control	38793	CSA	-	-	-	-	MASS	820
EMPORIO SHOWER	TRIM PARTS ONLY External parts for 2-way thermostatic diverter and volume control	38798	CSA	-	-	-	-	MASS	820
EMPORIO SHOWER	TRIM PARTS ONLY External parts for 3-way thermostatic diverter and volume control	38799	CSA	-	-	-	-	MASS	821
EMPORIO ACCESSORIES	Wall-mounted tissue holder	38849	-	-	-	-	-	-	828

GESSI

SERIES	DESCRIPTIONS	CODE	CSA	CEC	DOE	CALGREEN	EPA WATERSENSE	MASSA-CHUSSETS	PAGE
EMPORIO ACCESSORIES	Wall mounted tissue holder with cover	38855	-	-	-	-	-	-	828
EMPORIO ACCESSORIES	Corner shelf	38861	-	-	-	-	-	-	830
EMPORIO ACCESSORIES	12” towel bar	38897	-	-	-	-	-	-	828
EMPORIO ACCESSORIES	18” towel bar	38900	-	-	-	-	-	-	828
EMPORIO ACCESSORIES	24” towel bar	38903	-	-	-	-	-	-	829
EMPORIO ACCESSORIES	Towel ring	38909	-	-	-	-	-	-	829
EMPORIO ACCESSORIES	18” towel rail for glass fixing	38918	-	-	-	-	-	-	831
EMPORIO ACCESSORIES	Wall mounted garment hook	38921	-	-	-	-	-	-	829
EMPORIO ACCESSORIES	Shelf 30 cm	38945	-	-	-	-	-	-	830
EMPORIO ACCESSORIES	18” shelf	38947	-	-	-	-	-	-	830
EMPORIO ACCESSORIES	24” shelf	38949	-	-	-	-	-	-	830
EMPORIO ACCESSORIES	24” shelf with extended width 10-7/16”	38950	-	-	-	-	-	-	829
GOCCIA TOTAL LOOK	Counter washbasin in White Gres without overflow waste	39123	CSA	-	-	-	-	MASS	590, 773
GOCCIA TOTAL LOOK	Counter washbasin in White Gres without overflow waste	39124	CSA	-	-	-	-	MASS	590, 773
GOCCIA TOTAL LOOK	Counter washbasin in White Gres without overflow waste	39125	CSA	-	-	-	-	MASS	590, 773
GOCCIA TOTAL LOOK	Counter washbasin in White Gres without overflow waste	39133	CSA	-	-	-	-	MASS	591, 774
GOCCIA TOTAL LOOK	Counter washbasin in White Gres without overflow waste	39134	CSA	-	-	-	-	MASS	591, 774
GOCCIA TOTAL LOOK	Counter washbasin in White Gres without overflow waste	39135	CSA	-	-	-	-	MASS	591, 774
VIA MANZONI	Single lever washbasin mixer with pop-up assembly	39201	CSA	CEC	DOE	CAL	EPA	MASS	808
VIA MANZONI	Tall single lever washbasin mixer without pop-up assembly	39209	CSA	CEC	DOE	-	-	MASS	808
VIA MANZONI	Widespread washbasin mixer with pop-up assembly	39212	CSA	CEC	DOE	CAL	EPA	MASS	809
VIA MANZONI	Widespread washbasin mixer with pop-up assembly	39213	CSA	CEC	DOE	-	-	MASS	808
VIA MANZONI	Widespread washbasin mixer without pop-up assembly	39215	CSA	CEC	DOE	-	-	MASS	808
VIA MANZONI	Three-hole roman tub set	39234	CSA	CEC	DOE	-	-	MASS	810
VIA MANZONI	Wall-mounted washbasin spout only	39302	CSA	CEC	DOE	CAL	-	MASS	809
HANDSHOWER SETS EMPORIO SHOWER	Handshower set	39323	CSA	CEC	DOE	-	-	MASS	732, 824
HANDSHOWER SETS EMPORIO SHOWER	Handshower and adjustable sliding rail set	39342	CSA	CEC	DOE	-	-	MASS	737, 824
HEADSHOWER SECTION EMPORIO SHOWER	Wall-mounted adjustable shower head with arm	39349	CSA	CEC	DOE	-	-	MASS	623, 822
EMPORIO SHOWER	Wall elbow with built in water intake and fixed hook	39361	CSA	-	-	-	-	MASS	825
EMPORIO SHOWER	Wall elbow	39369	CSA	-	-	-	-	MASS	825
INVERSO VENTAGLIO ANELLO INGRANAGGIO HABITO RETTANGOLO GOCCIA	In-wall thermostatic rough valve with 5-way diverter	39601	CSA	-	-	-	-	MASS	77, 118, 376, 416, 497, 539, 574
VENTAGLIO ANELLO INGRANAGGIO HABITO GOCCIA	TRIM PARTS ONLY External parts for thermostatic with 2 volume controls	39644	CSA	-	-	-	-	MASS	115, 374, 413, 495, 572
VENTAGLIO ANELLO INGRANAGGIO HABITO GOCCIA	TRIM PARTS ONLY External parts for thermostatic with 3 volume controls	39646	CSA	-	-	-	-	MASS	116, 375, 414, 496, 573

GESSI

SERIES	DESCRIPTIONS	CODE	CSA	CEC	DOE	CALGREEN	EPA WATERSENSE	MASSA-CHUSSETS	PAGE
VENTAGLIO ANELLO INGRANAGGIO HABITO GOCCIA	TRIM PARTS ONLY External parts for thermostatic with 4 volume controls	39650	CSA	-	-	-	-	MASS	117, 376, 415, 497, 574
INVERSO RETTANGOLO	TRIM PARTS ONLY External parts for individual thermostatic mixer	39654	CSA	-	-	-	-	MASS	78, 539
VENTAGLIO ANELLO INGRANAGGIO HABITO GOCCIA	TRIM PARTS ONLY External parts for individual thermostatic mixer	39666	CSA	-	-	-	-	MASS	118, 377, 416, 498, 575
INVERSO VENTAGLIO ORIGINI GESSI316 INCISO INCISO VENTI20 ANELLO INGRANAGGIO HABITO RETTANGOLO GOCCIA	In-wall thermostatic rough valve for individual mixer	39681	CSA	-	-	-	-	MASS	78, 118, 168, 241, 285, 297, 338, 377, 416, 498, 539, 575
INVERSO VENTAGLIO ORIGINI GESSI316 INCISO INCISO VENTI20 ANELLO INGRANAGGIO HABITO RETTANGOLO GOCCIA	In-wall thermostatic rough valve parts for volume control	39683	CSA	-	-	-	-	MASS	78, 119, 168, 241, 285, 297, 339, 377, 417, 498, 540, 575
INVERSO VENTAGLIO ORIGINI GESSI316 INCISO INCISO VENTI20 VENTI20 ANELLO ANELLO INGRANAGGIO HABITO HABITO RETTANGOLO GOCCIA GOCCIA	In-wall thermostatic rough valve with 2 volume controls	39693	CSA	-	-	-	-	MASS	76, 115, 165, 238, 282, 294, 335, 336, 373, 374, 413, 494, 495, 537, 571, 572
INVERSO VENTAGLIO ORIGINI GESSI316 INCISO INCISO VENTI20 VENTI20 ANELLO ANELLO INGRANAGGIO HABITO HABITO RETTANGOLO GOCCIA GOCCIA	In-wall thermostatic rough valve with 3 volume controls	39695	CSA	-	-	-	-	MASS	76, 116, 166, 239, 283, 295, 336, 337, 374, 375, 414, 495, 496, 538, 572, 573
INVERSO VENTAGLIO ORIGINI GESSI316 INCISO INCISO VENTI20 VENTI20 ANELLO ANELLO INGRANAGGIO HABITO HABITO RETTANGOLO GOCCIA GOCCIA	In-wall thermostatic rough valve with 4 volume controls	39699	CSA	-	-	-	-	MASS	77, 117, 167, 240, 284, 296, 337, 338, 375, 376, 415, 496, 497, 538, 573, 574
INVERSO RETTANGOLO	TRIM PARTS ONLY External parts for thermostatic with 2 volume controls	39712	CSA	-	-	-	-	MASS	76, 537

SERIES	DESCRIPTIONS	CODE	CSA	CEC	DOE	CALGREEN	EPA WATERSENSE	MASSA-CHUSSETS	PAGE
INVERSO RETTANGOLO	TRIM PARTS ONLY External parts for thermostatic with 3 volume controls	39714	CSA	-	-	-	-	MASS	76, 538
INVERSO RETTANGOLO	TRIM PARTS ONLY External parts for thermostatic with 4 volume controls	39716	CSA	-	-	-	-	MASS	77, 538
INVERSO RETTANGOLO	TRIM PARTS ONLY External parts for 5-way thermostatic diverter with volume control	39720	CSA	-	-	-	-	MASS	77, 539
VENTAGLIO ANELLO INGRANAGGIO HABITO GOCCIA	TRIM PARTS ONLY External parts for 5-way thermostatic diverter with volume control	39750	CSA	-	-	-	-	MASS	118, 376, 416, 497, 574
VENTAGLIO ANELLO INGRANAGGIO HABITO GOCCIA	TRIM PARTS ONLY External parts for thermostatic with 2 volume controls	39752	CSA	-	-	-	-	MASS	115, 373, 413, 494, 571
VENTAGLIO ANELLO INGRANAGGIO HABITO GOCCIA	TRIM PARTS ONLY External parts for thermostatic with 3 volume controls	39754	CSA	-	-	-	-	MASS	116, 374, 414, 495, 572
VENTAGLIO ANELLO INGRANAGGIO HABITO GOCCIA	TRIM PARTS ONLY External parts for thermostatic with 4 volume controls	39756	CSA	-	-	-	-	MASS	117, 375, 415, 496, 573
TECHNICAL ACCESSORIES	0 - 1" height extension	43130	-	-	-	-	-	-	843
INVERSO RETTANGOLO	TRIM PARTS ONLY External parts for individual thermostatic volume control	43264	CSA	-	-	-	-	MASS	78, 540
VENTAGLIO ANELLO INGRANAGGIO HABITO GOCCIA	TRIM PARTS ONLY External parts for individual thermostatic volume control	43268	CSA	-	-	-	-	MASS	119, 377, 417, 498, 575
SENSOR TAPS	In-wall rough valve for wall-mounted electronic mixer.	44665	CSA	CEC	DOE	-	-	MASS	778, 779, 782, 783, 784, 785, 786, 787
SENSOR TAPS	In-wall rough valve for wall-mounted electronic separate control.	44679	CSA	CEC	DOE	-	-	MASS	779, 787, 788, 789, 790, 791
SENSOR TAPS	Power supplier for separate control as an alternative to the battery supplied in the standard version	44680	-	-	-	-	-	-	791
SENSOR TAPS	Power supply unit for multiple installation, up to 5 devices	44681	-	-	-	-	-	-	792
SENSOR TAPS	26ft extension for power supplier	44682	-	-	-	-	-	-	792
RETTANGOLO RILIEVO	Wall-mounted washbasin mixer control rough valve	44697	-	-	-	-	-	-	523, 531, 596
RETTANGOLO	External parts wall-mounted mixer, medium spout, without waste	44836	-	-	-	-	-	-	531
VIA MANZONI	External parts for built-in mixer with long spout, without waste	44895	-	-	-	-	-	-	810
VENTAGLIO ORIGINI ANELLO INGRANAGGIO HABITO	White waste-paper basket	45590	-	-	-	-	-	-	132, 185, 393, 433, 514
EMPORIO SHOWER	Handshower	47254	CSA	CEC	DOE	-	-	MASS	825
HEADSHOWER SECTION EMPORIO SHOWER	Wall-mounted adjustable shower head with arm	47284	CSA	CEC	DOE	-	-	MASS	623, 822
HEADSHOWER SECTION EMPORIO SHOWER	Wall-mounted adjustable shower head with arm	47286	CSA	CEC	DOE	-	-	MASS	626, 823
HEADSHOWER SECTION EMPORIO SHOWER	Ceiling-mounted adjustable shower head with arm	47288	CSA	CEC	DOE	-	-	MASS	631, 823
HEADSHOWER SECTION EMPORIO SHOWER	Ceiling-mounted adjustable shower head with arm	47290	CSA	CEC	DOE	-	-	MASS	633, 823
GESSI316 INCISO INCISO VENTI20 RILIEVO	Wall-mounted washbasin mixer rough valve	48089	CSA	CEC	DOE	-	-	MASS	195, 203, 211, 219, 227, 271, 289, 327, 597
RETTANGOLO RILIEVO	Wall-mounted one-way mixer control rough valve for trim 48106	48112	-	-	-	-	-	-	522, 530, 599

GESSI

SERIES	DESCRIPTIONS	CODE	CSA	CEC	DOE	CALGREEN	EPA WATERSENSE	MASSA-CHUSSETS	PAGE
INVERSO VENTAGLIO ORIGINI GESSI316 ANELLO INGRANAGGIO HABITO HABITO HABITO HABITO HABITO HABITO RETTANGOLO RETTANGOLO GOCCIA RILIEVO	Floor-mounted tub filler in-floor rough valve	48189	-	-	-	-	-	-	57, 69, 108, 159, 233, 365, 405, 446, 454, 462, 470, 478, 486, 524, 532, 569, 600
RETTANGOLO	Single lever washbasin mixer with pop-up assembly	53001	CSA	CEC	DOE	-	-	MASS	520
RETTANGOLO	Single lever washbasin mixer without pop-up assembly	53002	CSA	CEC	DOE	-	-	MASS	520
RETTANGOLO	Tall single lever washbasin mixer without pop-up assembly	53004	CSA	CEC	DOE	-	-	MASS	520
RETTANGOLO	Tall single lever washbasin mixer without pop-up assembly	53006	CSA	CEC	DOE	-	-	MASS	520
RETTANGOLO	Bidet mixer with pop-up assembly	53007	CSA	-	-	-	-	MASS	524
RETTANGOLO	Three-hole roman tub set	53037	CSA	CEC	DOE	-	-	MASS	525
RETTANGOLO	Three-hole roman tub set to be used with overflow filler	53043	CSA	CEC	DOE	-	-	MASS	525
RETTANGOLO	TRIM PARTS ONLY Wall-mounted washbasin mixer trim	53084	CSA	CEC	DOE	-	-	MASS	523
RETTANGOLO	TRIM PARTS ONLY Wall-mounted washbasin mixer trim	53088	CSA	CEC	DOE	-	-	MASS	523
RETTANGOLO	TRIM PARTS ONLY Wall-mounted washbasin mixer control	53109	CSA	-	-	-	-	MASS	522
GESSI316 INCISO	Wall-mounted Basin/bath mixer rough valve. One exit	53112	-	-	-	-	-	-	198, 206, 214, 222, 230, 275
RETTANGOLO	TRIM PARTS ONLY Floor-mounted tub filler	53129	CSA	CEC	DOE	-	-	MASS	524
GESSI316	Single lever washbasin mixer without pop-up assembly	54002	CSA	CEC	DOE	-	-	MASS	192
GESSI316	Deck mounted washbasin mixer control (Flessa)	54005	CSA	-	-	-	-	MASS	197
GESSI316	Tall single lever washbasin mixer without pop-up assembly	54006	CSA	CEC	DOE	-	-	MASS	192
GESSI316	Wall-mounted bath spout	54008	CSA	-	-	-	-	MASS	234
GESSI316	Tall single lever washbasin mixer without pop-up assembly	54009	CSA	CEC	DOE	-	-	MASS	192
GESSI316	Medium wall-mounted spout basin	54010	CSA	CEC	DOE	CAL	-	MASS	196, 204, 212, 220, 228
GESSI316	Widespread washbasin mixer without pop-up assembly	54012	CSA	CEC	DOE	-	-	MASS	192
SENSOR TAPS	TRIM PARTS ONLY Wall-mounted electronic mixer. FLESSA.	54014	CSA	CEC	DOE	-	-	MASS	782
SENSOR TAPS	TRIM PARTS ONLY Wall-mounted electronic mixer. FLESSA.	54015	CSA	CEC	DOE	-	-	MASS	783
GESSI316	TRIM PARTS ONLY Wall-mounted washbasin mixer control	54019	-	-	-	-	-	-	198
SENSOR TAPS	TRIM PARTS ONLY Wall-mounted electronic separate control with temperature and flow rate setting box.	54020	CSA	-	-	-	-	MASS	787
GESSI316 HANDSHOWER SETS	Handshower set	54023	CSA	CEC	DOE	-	-	MASS	249, 731
GESSI316	TRIM PARTS ONLY Floor-mounted tub filler	54028	CSA	CEC	DOE	-	-	MASS	233
GESSI316	TRIM PARTS ONLY External parts for thermostatic with single volume control	54032	CSA	-	-	-	-	MASS	235
GESSI316	TRIM PARTS ONLY External parts for 2-way diverter thermostatic and volume control	54034	CSA	-	-	-	-	MASS	236
GESSI316	TRIM PARTS ONLY External parts for 3-way diverter thermostatic and volume control	54036	CSA	-	-	-	-	MASS	237
GESSI316	Four-hole roman tub set	54037	CSA	CEC	DOE	-	-	MASS	232
GESSI316	TRIM PARTS ONLY. Wall-mounted bath mixer control	54038	-	-	-	-	-	-	234
GESSI316	Handshower sliding rail only	54042	-	-	-	-	-	-	249
GESSI316	Three-hole roman tub set	54043	CSA	CEC	DOE	-	-	MASS	232
GESSI316 HANDSHOWER SETS	Handshower and adjustable sliding rail set	54045	CSA	CEC	DOE	-	-	MASS	248, 735
GESSI316	Handshower	54054	CSA	CEC	DOE	-	-	MASS	252

SERIES	DESCRIPTIONS	CODE	CSA	CEC	DOE	CALGREEN	EPA WATERSENSE	MASSA-CHUSSETS	PAGE
ORIGINI VENTI20 ANELLO INGRANAGGIO HABITO HABITO HABITO HABITO HABITO HABITO	Wall-mounted Basin/bath mixer rough valve. One exit	54055	-	-	-	-	-	-	158, 332, 366, 407, 445, 453, 461, 469, 477, 485
SENSOR TAPS	Electronic basin mixer with temperature and water flow rate adjustment through under-basin control. FLESSA	54080	CSA	CEC	DOE	-	-	MASS	780
SENSOR TAPS	Electronic basin mixer with temperature and water flow rate adjustment through under-basin control. FLESSA	54081	CSA	CEC	DOE	-	-	MASS	780
GESSI316	TRIM PARTS ONLY Wall-mounted washbasin mixer trim	54083	CSA	CEC	DOE	-	-	MASS	194
GESSI316	TRIM PARTS ONLY Wall-mounted washbasin mixer trim	54086	CSA	CEC	DOE	-	-	MASS	194
GESSI316	TRIM PARTS ONLY Wall-mounted washbasin mixer trim	54088	CSA	CEC	DOE	-	-	MASS	193
GESSI316	TRIM PARTS ONLY Wall-mounted washbasin mixer trim	54090	CSA	CEC	DOE	-	-	MASS	193
GESSI316	Medium basin spout	54091	CSA	CEC	DOE	CAL	-	MASS	195, 203, 211, 219, 227
GESSI316	High basin spout	54093	CSA	CEC	DOE	CAL	-	MASS	195, 203, 211, 219, 227
GESSI316	TRIM PARTS ONLY Wall-mounted washbasin mixer trim	54094	CSA	CEC	DOE	-	-	MASS	195
GESSI316	Ceiling-mounted washbasin spout only	54096	CSA	CEC	DOE	-	-	MASS	197
GESSI316	Ceiling-mounted washbasin spout only	54099	CSA	CEC	DOE	-	-	MASS	196
GESSI316	Single lever washbasin mixer without pop-up assembly	54102	CSA	CEC	DOE	-	-	MASS	208
GESSI316	Deck mounted washbasin mixer control	54105	CSA	-	-	-	-	MASS	213
GESSI316	Tall single lever washbasin mixer without pop-up assembly	54106	CSA	CEC	DOE	-	-	MASS	208
GESSI316	Tall single lever washbasin mixer without pop-up assembly	54109	CSA	CEC	DOE	-	-	MASS	208
GESSI316	Long wall-mounted spout basin	54110	CSA	CEC	DOE	CAL	-	MASS	196, 204, 212, 220, 228
GESSI316	Widespread washbasin mixer without pop-up assembly	54112	CSA	CEC	DOE	-	-	MASS	208
SENSOR TAPS	TRIM PARTS ONLY Wall-mounted electronic mixer. INTRECCIO.	54114	CSA	CEC	DOE	-	-	MASS	784
SENSOR TAPS	TRIM PARTS ONLY Wall-mounted electronic mixer. INTRECCIO.	54115	CSA	CEC	DOE	-	-	MASS	785
GESSI316	TRIM PARTS ONLY Wall-mounted washbasin mixer control	54119	-	-	-	-	-	-	214
INVERSO VENTAGLIO ORIGINI GESSI316 ANELLO INGRANAGGIO HABITO	59" black flex hose with options to change the metal ends with desired finish	54137	CSA	-	-	-	-	MASS	86, 124, 175, 252, 384, 423, 504
INVERSO VENTAGLIO ORIGINI GESSI316 ANELLO INGRANAGGIO HABITO HABITO HABITO HABITO HABITO HABITO	Wall-mounted bath mixer control rough valve	54139	-	-	-	-	-	-	58, 70, 109, 160, 234, 367, 406, 447, 455, 463, 471, 479, 487
GESSI316 HEADSHOWER SECTION	Wall-mounted adjustable shower head with arm	54148	CSA	CEC	DOE	-	-	MASS	242, 625
GESSI316 HEADSHOWER SECTION	Ceiling-mounted adjustable shower head with arm	54152	CSA	CEC	DOE	-	-	MASS	242, 630
GESSI316	Handshower fixed hook	54157	-	-	-	-	-	-	252
GESSI316	Handshower adjustable hook	54160	CSA	CEC	DOE	-	-	MASS	252
GESSI316	Wall elbow with backplate	54161	CSA	-	-	-	-	MASS	251

GESSI

SERIES	DESCRIPTIONS	CODE	CSA	CEC	DOE	CALGREEN	EPA WATERSENSE	MASSA-CHUSSETS	PAGE
VENTAGLIO GESSI316 GESSI316 GESSI316 ANELLO ANELLO ANELLO ANELLO INGRANAGGIO INGRANAGGIO INGRANAGGIO	In-wall thermostatic rough valve for 1/2/3-way diverter function	54169	CSA	-	-	-	-	MASS	111, 112, 113, 235, 236, 237, 369, 370, 371, 372, 409, 410, 411
SENSOR TAPS	Electronic basin mixer with temperature and water flow rate adjustment through under-basin control. INTRECCIO	54180	CSA	CEC	DOE	-	-	MASS	781
SENSOR TAPS	Electronic basin mixer with temperature and water flow rate adjustment through under-basin control. INTRECCIO	54181	CSA	CEC	DOE	-	-	MASS	781
GESSI316	TRIM PARTS ONLY Wall-mounted washbasin mixer trim	54183	CSA	CEC	DOE	-	-	MASS	210
GESSI316	TRIM PARTS ONLY Wall-mounted washbasin mixer trim	54186	CSA	CEC	DOE	-	-	MASS	210
GESSI316	TRIM PARTS ONLY Wall-mounted washbasin mixer trim	54188	CSA	CEC	DOE	-	-	MASS	209
GESSI316	TRIM PARTS ONLY Wall-mounted washbasin mixer trim	54190	CSA	CEC	DOE	-	-	MASS	209
GESSI316	TRIM PARTS ONLY Wall-mounted washbasin mixer trim	54194	CSA	CEC	DOE	-	-	MASS	211
GESSI316	Ceiling-mounted washbasin spout only	54196	CSA	CEC	DOE	-	-	MASS	213
ORIGINI GESSI316 GESSI316 GESSI316 GESSI316 GESSI316 GESSI316 GESSI316 GESSI316 GESSI316 GESSI316 INCISO INCISO HABITO HABITO HABITO HABITO HABITO HABITO	Wall-mounted washbasin mixer rough valve	54197	-	-	-	-	-	-	155, 193, 194, 201, 202, 209, 210, 217, 218, 225, 226, 273, 274, 443, 451, 459, 467, 475, 483
GESSI316	Ceiling-mounted washbasin spout only	54199	CSA	CEC	DOE	-	-	MASS	212
GESSI316	Single lever washbasin mixer without pop-up assembly	54202	CSA	CEC	DOE	-	-	MASS	216
GESSI316	Deck mounted washbasin mixer control	54205	CSA	-	-	-	-	MASS	221
GESSI316	Tall single lever washbasin mixer without pop-up assembly	54206	CSA	CEC	DOE	-	-	MASS	216
GESSI316	Tall single lever washbasin mixer without pop-up assembly	54209	CSA	CEC	DOE	-	-	MASS	216
GESSI316	Widespread washbasin mixer without pop-up assembly	54212	CSA	CEC	DOE	-	-	MASS	216
SENSOR TAPS	TRIM PARTS ONLY Wall-mounted electronic mixer. MECCANICA.	54214	CSA	CEC	DOE	-	-	MASS	785
SENSOR TAPS	TRIM PARTS ONLY Wall-mounted electronic mixer. MECCANICA.	54215	CSA	-	-	-	-	MASS	786
GESSI316	TRIM PARTS ONLY Wall-mounted washbasin mixer control	54219	-	-	-	-	-	-	222
GESSI316	TRIM PARTS ONLY External parts for thermostatic with single volume control	54232	CSA	-	-	-	-	MASS	235
GESSI316	TRIM PARTS ONLY External parts for 2-way diverter thermostatic and volume control	54234	CSA	-	-	-	-	MASS	236
GESSI316	TRIM PARTS ONLY External parts for 3-way diverter thermostatic and volume control	54236	CSA	-	-	-	-	MASS	237
GESSI316	Wall elbow with backplate	54269	CSA	-	-	-	-	MASS	251
SENSOR TAPS	Electronic basin mixer with temperature and water flow rate adjustment through under-basin control. MECCANICA	54280	CSA	CEC	DOE	-	-	MASS	781
SENSOR TAPS	Electronic basin mixer with temperature and water flow rate adjustment through under-basin control. MECCANICA	54281	CSA	CEC	DOE	-	-	MASS	781
GESSI316	TRIM PARTS ONLY Wall-mounted washbasin mixer trim	54283	CSA	CEC	DOE	-	-	MASS	218
GESSI316	TRIM PARTS ONLY Wall-mounted washbasin mixer trim	54286	CSA	CEC	DOE	-	-	MASS	218
GESSI316	TRIM PARTS ONLY Wall-mounted washbasin mixer trim	54288	CSA	CEC	DOE	-	-	MASS	217
GESSI316	TRIM PARTS ONLY Wall-mounted washbasin mixer trim	54290	CSA	CEC	DOE	-	-	MASS	217
GESSI316	TRIM PARTS ONLY Wall-mounted washbasin mixer trim	54294	CSA	CEC	DOE	-	-	MASS	219
GESSI316	Ceiling-mounted washbasin spout only	54296	CSA	CEC	DOE	-	-	MASS	221
GESSI316	Ceiling-mounted washbasin spout only	54299	CSA	CEC	DOE	-	-	MASS	220
GESSI316	Single lever washbasin mixer without pop-up assembly	54302	CSA	CEC	DOE	-	-	MASS	200
GESSI316	Deck mounted washbasin mixer control	54305	CSA	-	-	-	-	MASS	205
GESSI316	Tall single lever washbasin mixer without pop-up assembly	54306	CSA	CEC	DOE	-	-	MASS	200
GESSI316	Tall single lever washbasin mixer without pop-up assembly	54309	CSA	CEC	DOE	-	-	MASS	200

SERIES	DESCRIPTIONS	CODE	CSA	CEC	DOE	CALGREEN	EPA WATERSENSE	MASSA-CHUSSETS	PAGE
GESSI316	Widespread washbasin mixer without pop-up assembly	54312	CSA	CEC	DOE	-	-	MASS	200
SENSOR TAPS	TRIM PARTS ONLY Wall-mounted electronic mixer. TRAME.	54314	CSA	CEC	DOE	-	-	MASS	783
SENSOR TAPS	TRIM PARTS ONLY Wall-mounted electronic mixer. TRAME.	54315	CSA	CEC	DOE	-	-	MASS	784
GESSI316	TRIM PARTS ONLY Wall-mounted washbasin mixer control	54319	-	-	-	-	-	-	206
SENSOR TAPS	Electronic basin mixer with temperature and water flow rate adjustment through under-basin control. TRAME	54380	CSA	CEC	DOE	-	-	MASS	780
SENSOR TAPS	Electronic basin mixer with temperature and water flow rate adjustment through under-basin control. TRAME	54381	CSA	CEC	DOE	-	-	MASS	780
GESSI316	TRIM PARTS ONLY Wall-mounted washbasin mixer trim	54383	CSA	CEC	DOE	-	-	MASS	202
GESSI316	TRIM PARTS ONLY Wall-mounted washbasin mixer trim	54386	CSA	CEC	DOE	-	-	MASS	202
GESSI316	TRIM PARTS ONLY Wall-mounted washbasin mixer trim	54388	CSA	CEC	DOE	-	-	MASS	201
GESSI316	TRIM PARTS ONLY Wall-mounted washbasin mixer trim	54390	CSA	CEC	DOE	-	-	MASS	201
GESSI316	TRIM PARTS ONLY Wall-mounted washbasin mixer trim	54394	CSA	CEC	DOE	-	-	MASS	203
GESSI316	Ceiling-mounted washbasin spout only	54396	CSA	CEC	DOE	-	-	MASS	205
GESSI316	Ceiling-mounted washbasin spout only	54399	CSA	CEC	DOE	-	-	MASS	204
GESSI316	Single lever washbasin mixer without pop-up assembly	54402	CSA	CEC	DOE	-	-	MASS	224
GESSI316	Deck mounted washbasin mixer control	54405	CSA	-	-	-	-	MASS	229
GESSI316	Tall single lever washbasin mixer without pop-up assembly	54406	CSA	CEC	DOE	-	-	MASS	224
GESSI316	Tall single lever washbasin mixer without pop-up assembly	54409	CSA	CEC	DOE	-	-	MASS	224
GESSI316	Widespread washbasin mixer without pop-up assembly	54412	CSA	CEC	DOE	-	-	MASS	224
SENSOR TAPS	TRIM PARTS ONLY Wall-mounted electronic mixer. CESELLO.	54414	CSA	CEC	DOE	-	-	MASS	786
SENSOR TAPS	TRIM PARTS ONLY Wall-mounted electronic mixer. CESELLO.	54415	CSA	CEC	DOE	-	-	MASS	787
GESSI316	TRIM PARTS ONLY Wall-mounted washbasin mixer control	54419	-	-	-	-	-	-	230
SENSOR TAPS	Electronic basin mixer with temperature and water flow rate adjustment through under-basin control. CESELLO	54480	CSA	CEC	DOE	-	-	MASS	782
SENSOR TAPS	Electronic basin mixer with temperature and water flow rate adjustment through under-basin control. CESELLO	54481	CSA	CEC	DOE	-	-	MASS	782
GESSI316	TRIM PARTS ONLY Wall-mounted washbasin mixer trim	54483	CSA	CEC	DOE	-	-	MASS	226
GESSI316	TRIM PARTS ONLY Wall-mounted washbasin mixer trim	54486	CSA	CEC	DOE	-	-	MASS	226
GESSI316	TRIM PARTS ONLY Wall-mounted washbasin mixer trim	54488	CSA	CEC	DOE	-	-	MASS	225
GESSI316	TRIM PARTS ONLY Wall-mounted washbasin mixer trim	54490	CSA	CEC	DOE	-	-	MASS	225
GESSI316	TRIM PARTS ONLY Wall-mounted washbasin mixer trim	54494	CSA	CEC	DOE	-	-	MASS	227
GESSI316	Ceiling-mounted washbasin spout only	54496	CSA	CEC	DOE	-	-	MASS	229
GESSI316	Ceiling-mounted washbasin spout only	54499	CSA	CEC	DOE	-	-	MASS	228
GESSI316	TRIM PARTS ONLY External parts for thermostatic with 2volume controls	54504	CSA	-	-	-	-	MASS	238
GESSI316	TRIM PARTS ONLY External parts for thermostatic with 3volume controls	54506	CSA	-	-	-	-	MASS	239
GESSI316	TRIM PARTS ONLY External parts for thermostatic with 4volume controls	54508	CSA	-	-	-	-	MASS	240
GESSI316	TRIM PARTS ONLY External parts for thermostatic with 2volume controls	54514	CSA	-	-	-	-	MASS	238
GESSI316	TRIM PARTS ONLY External parts for thermostatic with 3volume controls	54516	CSA	-	-	-	-	MASS	239
GESSI316	TRIM PARTS ONLY External parts for thermostatic with 4volume controls	54518	CSA	-	-	-	-	MASS	240
GESSI316	TRIM PARTS ONLY External parts for individual thermostaticmixer	54554	CSA	-	-	-	-	MASS	241
GESSI316	TRIM PARTS ONLY External parts for individual thermostaticvolume control	54564	CSA	-	-	-	-	MASS	241
INVERSO VENTAGLIO GESSI316 INCISO VENTI20 ANELLO INGRANAGGIO HABITO RETTANGOLO RILIEVO TOTAL LOOK DRAINS	1 1/4" push drain with or without overflow feature - Recommended for Gessi 316 Collection	54597	-	-	-	-	-	-	101, 136, 267, 320, 357, 396, 436, 517, 561, 620, 775, 835
INVERSO VENTAGLIO GESSI316 INCISO VENTI20 ANELLO INGRANAGGIO HABITO RETTANGOLO RILIEVO TOTAL LOOK	Counter washbasin In stainless steel, without overflow waste. Without basin waste. It can be combined with waste 54597.	54601	CSA	-	-	-	-	MASS	100, 136, 266, 320, 356, 396, 436, 516, 561, 620, 772

GESSI

SERIES	DESCRIPTIONS	CODE	CSA	CEC	DOE	CALGREEN	EPA WATERSENSE	MASSA-CHUSSETS	PAGE
INVERSO VENTAGLIO ORIGINI GESSI316 INCISO HABITO RETTANGOLO GOCCIA RILIEVO FLUSH PLATES	Flush Actuator Plate	54611	-	-	-	-	-	-	100, 136, 188, 266, 320, 516, 560, 590, 620, 768
ANELLO FLUSH PLATES	Flush Actuator Plate ANELLO	54623	-	-	-	-	-	-	396, 768
INGRANAGGIO FLUSH PLATES	Flush Actuator Plate INGRANAGGIO	54635	-	-	-	-	-	-	436, 768
VENTI20 FLUSH PLATES	Flush Actuator Plate VENTI20	54651	-	-	-	-	-	-	356, 768
INVERSO GESSI316 HABITO FLUSH PLATES	Flush Actuator Plate RIGATO	54671	-	-	-	-	-	-	100, 266, 516, 769
INVERSO GESSI316 HABITO FLUSH PLATES	Flush Actuator Plate DIAMANTATO	54681	-	-	-	-	-	-	100, 266, 516, 769
GESSI316	Wall-mounted soap dish, white	54701	-	-	-	-	-	-	256
GESSI316	Wall-mounted soap dish, black	54702	-	-	-	-	-	-	256
GESSI316	Wall-mounted holder, white	54707	-	-	-	-	-	-	256
GESSI316	Wall-mounted holder, black	54708	-	-	-	-	-	-	256
GESSI316	Wall-mounted liquid soap dispenser , white	54713	-	-	-	-	-	-	257
GESSI316	Wall-mounted liquid soap dispenser - black	54714	-	-	-	-	-	-	257
GESSI316	Wall-mounted brush holder, white	54719	-	-	-	-	-	-	257
GESSI316	Wall-mounted brush holder, black	54720	-	-	-	-	-	-	257
GESSI316	Wall-mounted brush holder	54721	-	-	-	-	-	-	258
GESSI316	Standing soap holder, white	54725	-	-	-	-	-	-	258
GESSI316	Standing soap holder, black	54726	-	-	-	-	-	-	258
GESSI316	Standing tumbler holder, white	54731	-	-	-	-	-	-	258
GESSI316	Standing tumbler holder, black	54732	-	-	-	-	-	-	259
GESSI316	Standing soap dispenser holder, white	54737	-	-	-	-	-	-	259
GESSI316	Standing soap dispenser holder, black	54738	-	-	-	-	-	-	259
GESSI316	Standing brush holder, white	54743	-	-	-	-	-	-	259
GESSI316	Standing brush holder, black	54744	-	-	-	-	-	-	260
GESSI316	Standing brush holder	54745	-	-	-	-	-	-	260
GESSI316	Wall-mounted tissue holder	54749	-	-	-	-	-	-	260
GESSI316	12” towel bar	54797	-	-	-	-	-	-	260
GESSI316	18” towel bar	54800	-	-	-	-	-	-	261
GESSI316	24” towel bar	54803	-	-	-	-	-	-	261
GESSI316	Wall-mounted garment hook	54821	-	-	-	-	-	-	261
GESSI316	Towel rail for glass fixing - 12” length	54921	-	-	-	-	-	-	261
GESSI316	Towel rail for glass fixing - 18” length	54923	-	-	-	-	-	-	262
GESSI316	Towel rail for glass fixing - 24” length	54925	-	-	-	-	-	-	262
AFILO	Cover for 12” shower system	57002	CSA	CEC	DOE	-	-	MASS	666, 667
AFILO	Cover for 12” multifunction system	57004	CSA	CEC	DOE	-	-	MASS	668, 669
AFILO MINIMALI	Cover for 12” x 19-7/8” shower system	57006	CSA	CEC	DOE	-	-	MASS	670, 671, 686
AFILO MINIMALI	Cover for 12” x 19-7/8” multifunction system	57010	CSA	CEC	DOE	-	-	MASS	672, 673, 687
AFILO MINIMALI	Cover for 19-7/8” shower system	57012	CSA	CEC	DOE	-	-	MASS	674, 675, 688
AFILO MINIMALI	Cover for 19-7/8” multifunction system	57016	CSA	CEC	DOE	-	-	MASS	676, 677, 689
AFILO MINIMALI	Cover for Ø14” shower system	57018	CSA	CEC	DOE	-	-	MASS	678, 679, 690
GESSI316 SPOTWATER	Wall-mounted adjustable showerhead FLESSA.	57201	CSA	CEC	DOE	-	-	MASS	242, 709
GESSI316 SPOTWATER	Wall-mounted adjustable showerhead FLESSA.	57203	CSA	CEC	DOE	-	-	MASS	242, 709
GESSI316 SPOTWATER	Wall-mounted adjustable showerhead FLESSA.	57205	CSA	CEC	DOE	-	-	MASS	243, 709

GESSI

SERIES	DESCRIPTIONS	CODE	CSA	CEC	DOE	CALGREEN	EPA WATERSENSE	MASSA-CHUSSETS	PAGE
GESSI316 SPOTWATER	Wall-mounted adjustable showerhead FLESSA.	57207	CSA	CEC	DOE	-	-	MASS	243, 709
GESSI316 SPOTWATER	Wall-mounted adjustable showerhead INTRECCIO.	57211	CSA	CEC	DOE	-	-	MASS	245, 711
GESSI316 SPOTWATER	Wall-mounted adjustable showerhead INTRECCIO.	57213	CSA	CEC	DOE	-	-	MASS	245, 711
GESSI316 SPOTWATER	Wall-mounted adjustable showerhead INTRECCIO.	57215	CSA	CEC	DOE	-	-	MASS	245, 712
GESSI316 SPOTWATER	Wall-mounted adjustable showerhead INTRECCIO.	57217	CSA	CEC	DOE	-	-	MASS	245, 712
GESSI316 SPOTWATER	Wall-mounted adjustable showerhead MECCANICA.	57221	CSA	CEC	DOE	-	-	MASS	246, 715
GESSI316 SPOTWATER	Wall-mounted adjustable showerhead MECCANICA.	57223	CSA	CEC	DOE	-	-	MASS	246, 715
GESSI316 SPOTWATER	Wall-mounted adjustable showerhead MECCANICA.	57225	CSA	CEC	DOE	-	-	MASS	246, 715
GESSI316 SPOTWATER	Wall-mounted adjustable showerhead MECCANICA.	57227	CSA	CEC	DOE	-	-	MASS	247, 716
GESSI316 SPOTWATER	Wall-mounted adjustable showerhead CESELLO.	57231	CSA	CEC	DOE	-	-	MASS	247, 716
GESSI316 SPOTWATER	Wall-mounted adjustable showerhead CESELLO.	57233	CSA	CEC	DOE	-	-	MASS	247, 716
GESSI316 SPOTWATER	Wall-mounted adjustable showerhead CESELLO.	57235	CSA	CEC	DOE	-	-	MASS	248, 717
GESSI316 SPOTWATER	Wall-mounted adjustable showerhead CESELLO.	57237	CSA	CEC	DOE	-	-	MASS	248, 717
GESSI316 SPOTWATER	Wall-mounted adjustable showerhead TRAME.	57241	CSA	CEC	DOE	-	-	MASS	243, 710
GESSI316 SPOTWATER	Wall-mounted adjustable showerhead TRAME	57243	CSA	CEC	DOE	-	-	MASS	244, 710
GESSI316 SPOTWATER	Wall-mounted adjustable showerhead TRAME.	57245	CSA	CEC	DOE	-	-	MASS	244, 710
GESSI316 SPOTWATER	Wall-mounted adjustable showerhead TRAME.	57247	CSA	CEC	DOE	-	-	MASS	244, 711
GESSI316 SPOTWATER	Wall-mounted adjustable shower head FLESSA. RAINFALL/SPRAY/ MASSAGE function.	57249	CSA	CEC	DOE	-	-	MASS	243, 710
GESSI316 SPOTWATER	Wall-mounted adjustable showerhead INTRECCIO.	57251	CSA	CEC	DOE	-	-	MASS	246, 712
GESSI316 SPOTWATER	Wall-mounted adjustable showerhead MECCANICA.	57253	CSA	CEC	DOE	-	-	MASS	247, 716
GESSI316 SPOTWATER	Wall-mounted adjustable showerhead CESELLO.	57255	CSA	CEC	DOE	-	-	MASS	248, 717
GESSI316 SPOTWATER	Wall-mounted adjustable showerhead TRAME.	57257	CSA	CEC	DOE	-	-	MASS	244, 711
SPOTWATER	Wall-mounted adjustable showerhead .	57261	CSA	CEC	DOE	-	-	MASS	720
SPOTWATER	Wall-mounted adjustable showerhead.	57263	CSA	CEC	DOE	-	-	MASS	720
SPOTWATER	Wall-mounted adjustable showerhead.	57265	CSA	CEC	DOE	-	-	MASS	720
SPOTWATER	Wall-mounted adjustable showerhead.	57267	CSA	CEC	DOE	-	-	MASS	720
SPOTWATER	Wall-mounted adjustable shower head.	57269	CSA	CEC	DOE	-	-	MASS	721
SPOTWATER	Wall-mounted adjustable shower head RIGATO.	57271	CSA	CEC	DOE	-	-	MASS	713
SPOTWATER	Wall-mounted adjustable shower head DIAMANTATO.	57273	CSA	CEC	DOE	-	-	MASS	715
SPOTWATER	Wall-mounted adjustable showerhead DIAMANTATO.	57275	CSA	CEC	DOE	-	-	MASS	714
SPOTWATER	Wall-mounted adjustable showerhead RIGATO.	57277	CSA	CEC	DOE	-	-	MASS	713
SPOTWATER	Wall-mounted adjustable showerhead DIAMANTATO.	57279	CSA	CEC	DOE	-	-	MASS	714
SPOTWATER	Wall-mounted adjustable showerhead RIGATO.	57281	CSA	CEC	DOE	-	-	MASS	713
SPOTWATER	Wall-mounted adjustable showerhead DIAMANTATO.	57283	CSA	CEC	DOE	-	-	MASS	714
SPOTWATER	Wall-mounted adjustable showerhead RIGATO.	57285	CSA	CEC	DOE	-	-	MASS	713
SPOTWATER	Wall-mounted adjustable showerhead DIAMANTATO.	57287	CSA	CEC	DOE	-	-	MASS	714
SPOTWATER	Wall-mounted adjustable showerhead RIGATO.	57289	CSA	CEC	DOE	-	-	MASS	712
AFILO	Built-in shower system	57301	CSA	CEC	DOE	-	-	MASS	666
AFILO	Surface mounted shower system	57303	CSA	CEC	DOE	-	-	MASS	667
AFILO	Built-in shower multifunction system	57305	CSA	CEC	DOE	-	-	MASS	668
AFILO	Surface mounted multifunction shower system	57307	CSA	CEC	DOE	-	-	MASS	669
AFILO	Built-in shower system	57401	CSA	CEC	DOE	-	-	MASS	670
AFILO	Surface mounted shower system	57403	CSA	CEC	DOE	-	-	MASS	671
AFILO	Built-in multifunction shower system	57409	CSA	CEC	DOE	-	-	MASS	672
AFILO	Surface mounted multifunction shower system	57411	CSA	CEC	DOE	-	-	MASS	673

GESSI

SERIES	DESCRIPTIONS	CODE	CSA	CEC	DOE	CALGREEN	EPA WATERSENSE	MASSA-CHUSSETS	PAGE
AFILO	Built-in shower system	57501	CSA	CEC	DOE	-	-	MASS	674
AFILO	Surface mounted shower system	57503	CSA	CEC	DOE	-	-	MASS	675
AFILO	Built-in multifunction shower system	57509	CSA	CEC	DOE	-	-	MASS	676
AFILO	Surface mounted multifunction shower system	57511	CSA	CEC	DOE	-	-	MASS	677
AFILO	Built-in shower system	57601	CSA	CEC	DOE	-	-	MASS	678
AFILO	Surface mounted shower system	57603	CSA	CEC	DOE	-	-	MASS	679
MINIMALI	Shower system for ceiling installation	57801	CSA	CEC	DOE	-	-	MASS	684
MINIMALI	Shower system for ceiling installation	57803	CSA	CEC	DOE	-	-	MASS	690
MINIMALI	Shower system for ceiling installation	57805	CSA	CEC	DOE	-	-	MASS	686
MINIMALI	Multifunction system for ceiling installation	57807	CSA	CEC	DOE	-	-	MASS	685
MINIMALI	Multifunction system for ceiling installation	57809	CSA	CEC	DOE	-	-	MASS	691
MINIMALI	Multifunction system for ceiling installation	57811	CSA	CEC	DOE	-	-	MASS	687
COLOUR	Multifunction system for ceiling installation	57827	CSA	CEC	DOE	-	-	MASS	696
COLOUR	Multifunction system for ceiling installation	57829	CSA	CEC	DOE	-	-	MASS	699
COLOUR	Multifunction system for ceiling installation	57831	CSA	CEC	DOE	-	-	MASS	697
MINIMALI	Cover for 13-3/4” shower system.	57871	CSA	CEC	DOE	-	-	MASS	684
MINIMALI	Cover for Ø14” multifunction system.	57873	CSA	CEC	DOE	-	-	MASS	691
MINIMALI	Cover for 13-3/4” multifunction system.	57875	CSA	CEC	DOE	-	-	MASS	685
COLOUR	Cover with lighting system for 13-3/4” multifunction system.	57876	CSA	CEC	DOE	-	-	MASS	696
COLOUR	Cover with lighting system for Ø14” multifunction system.	57878	CSA	CEC	DOE	-	-	MASS	699
COLOUR	Cover with lighting system for 12” x 19-7/8” multifunction system.	57882	CSA	CEC	DOE	-	-	MASS	697
MINIMALI	Shower system for ceiling installation	57901	CSA	CEC	DOE	-	-	MASS	688
MINIMALI	Shower system for ceiling installation	57903	CSA	CEC	DOE	-	-	MASS	692
MINIMALI	Multifunction system for ceiling installation	57907	CSA	CEC	DOE	-	-	MASS	689
MINIMALI	Multifunction system for ceiling installation	57909	CSA	CEC	DOE	-	-	MASS	693
COLOUR	Multifunction system for ceiling installation	57927	CSA	CEC	DOE	-	-	MASS	698
COLOUR	Multifunction system for ceiling installation	57929	CSA	CEC	DOE	-	-	MASS	700
MINIMALI	Cover for Ø19-3/4” shower system.	57973	CSA	CEC	DOE	-	-	MASS	692
MINIMALI	Cover for Ø19-3/4” multifunction system.	57975	CSA	CEC	DOE	-	-	MASS	693
COLOUR	Cover with lighting system for 19-7/8” multifunction system.	57977	CSA	CEC	DOE	-	-	MASS	698
COLOUR	Cover with lighting system for Ø19-3/4” multifunction system.	57980	CSA	CEC	DOE	-	-	MASS	700
INCISO	Single lever washbasin mixer with pop-up assembly	58001	CSA	CEC	DOE	CAL	EPA	MASS	272
INCISO	Single lever washbasin mixer without pop-up assembly	58002	CSA	CEC	DOE	CAL	EPA	MASS	272
INCISO	Tall single lever washbasin mixer with pop-up assembly	58003	CSA	CEC	DOE	CAL	EPA	MASS	272
INCISO	Tall single lever washbasin mixer without pop-up assembly	58004	CSA	CEC	DOE	CAL	EPA	MASS	272
INCISO	High basin mixer, flexible connections, without waste	58006	-	-	-	-	-	-	273
INCISO	Single lever bidet mixer with pop-up assembly	58007	CSA	-	-	-	-	MASS	277
INCISO	Basin mixer, flexible connections, without waste	58009	-	-	-	-	-	-	273
INCISO	Widespread washbasin mixer with pop-up assembly	58011	CSA	CEC	DOE	CAL	EPA	MASS	270
INCISO	Widespread washbasin mixer without pop-up assembly	58012	CSA	CEC	DOE	CAL	EPA	MASS	270
INCISO	Widespread washbasin mixer with pop-up assembly	58013	CSA	CEC	DOE	CAL	EPA	MASS	270
INCISO	Widespread washbasin mixer without pop-up assembly	58014	CSA	CEC	DOE	CAL	EPA	MASS	270
SENSOR TAPS	TRIM PARTS ONLY Wall-mounted electronic separate control with temperature and flow rate setting box	58019	CSA	-	-	-	-	MASS	779
SENSOR TAPS	Electronic basin mixer with temperature and water flow rate adjustment through under-basin control	58023	CSA	CEC	DOE	-	-	MASS	778
INCISO	TRIM PARTS ONLY Floor-mounted tub filler	58029	CSA	CEC	DOE	-	-	MASS	278
INCISO	Five-hole roman tub set	58040	CSA	CEC	DOE	-	-	MASS	278
INCISO	Four-hole roman tub set to be used with overflow filler	58043	CSA	CEC	DOE	-	-	MASS	279
INCISO	TRIM PARTS ONLY Wall-mounted wahbasin mixer trim, without waste	58088	CSA	CEC	DOE	-	-	MASS	273
INCISO	TRIM PARTS ONLY Wall-mounted wahbasin mixer trim, without waste	58089	CSA	CEC	DOE	-	-	MASS	274
INCISO	TRIM PARTS ONLY Wall-mounted wahbasin mixer trim, without waste	58090	CSA	CEC	DOE	-	-	MASS	271
INCISO	TRIM PARTS ONLY Wall-mounted wahbasin mixer trim, without waste	58092	CSA	CEC	DOE	-	-	MASS	271
INCISO	Medium basin spout	58093	CSA	CEC	DOE	CAL	-	MASS	276
INCISO	Wall-mounted spout only	58100	CSA	CEC	DOE	-	-	MASS	274
INCISO	Wall-mounted spout only	58101	CSA	CEC	DOE	-	-	MASS	274
INCISO	Wall mounted Bath spout only	58103	CSA	-	-	-	-	MASS	277

GESSI

SERIES	DESCRIPTIONS	CODE	CSA	CEC	DOE	CALGREEN	EPA WATERSENSE	MASSA-CHUSSETS	PAGE
SENSOR TAPS	TRIM PARTS ONLY Wall-mounted electronic mixer.	58105	CSA	CEC	DOE	-	-	MASS	778
SENSOR TAPS	TRIM PARTS ONLY Wall-mounted electronic mixer.	58107	CSA	CEC	DOE	-	-	MASS	779
INCISO	TTRIM PARTS ONLY Wall mounted mixer control with Ø35 cartridge	58109	-	-	-	-	-	-	275
INCISO	Widespread washbasin mixer with pop-up assembly	58111	CSA	CEC	DOE	-	-	MASS	288
INCISO	Widespread washbasin mixer without pop-up assembly	58112	CSA	CEC	DOE	-	-	MASS	288
INCISO	Widespread washbasin mixer with pop-up assembly	58113	CSA	CEC	DOE	-	-	MASS	288
INCISO	Widespread washbasin mixer without pop-up assembly	58114	CSA	CEC	DOE	-	-	MASS	288
INCISO HANDSHOWER SETS	Handshower set	58123	CSA	CEC	DOE	-	-	MASS	304, 730
INCISO	TRIM PARTS ONLY Floor-mounted tub filler	58129	CSA	CEC	DOE	-	-	MASS	290
INCISO	TRIM PARTS ONLY External parts for thermostatic with single volume control	58132	CSA	-	-	-	-	MASS	279
INCISO	TRIM PARTS ONLY External parts for 2-way thermostatic diverter and volume control	58134	CSA	-	-	-	-	MASS	280
INCISO	TRIM PARTS ONLY External parts for 3-way thermostatic diverter and volume control	58136	CSA	-	-	-	-	MASS	280
INCISO	Five-hole roman tub set	58140	CSA	CEC	DOE	-	-	MASS	290
INCISO HANDSHOWER SETS	Handshower and adjustable sliding rail set	58142	CSA	CEC	DOE	-	-	MASS	302, 735
INCISO	Four-hole roman tub set	58143	CSA	CEC	DOE	-	-	MASS	291
INCISO	Handshower sliding rail only	58144	-	-	-	-	-	-	303
INCISO HEADSHOWER SECTION	Wall-mounted adjustable shower head with arm.	58148	CSA	CEC	DOE	-	-	MASS	301, 622
INCISO HEADSHOWER SECTION	Ceiling-mounted adjustable shower head with arm.	58152	CSA	CEC	DOE	-	-	MASS	301, 630
VENTAGLIO ORIGINI INCISO ANELLO INGRANAGGIO HABITO	Fixed handshower hook.	58157	-	-	-	-	-	-	123, 174, 305, 382, 422, 502
VENTAGLIO ORIGINI INCISO ANELLO INGRANAGGIO HABITO	Adjustable handshower hook.	58160	-	-	-	-	-	-	123, 174, 306, 383, 422, 503
INCISO	Wall elbow with built in water intake and fixed hook	58161	CSA	-	-	-	-	MASS	305
INCISO	Wall elbow with backplate	58169	CSA	-	-	-	-	MASS	305
INCISO	TRIM PARTS ONLY External parts for single exit pressure balance	58173	CSA	-	-	-	-	MASS	281, 293
INCISO	TRIM PARTS ONLY External parts for pressure balance with 2-way diverter	58174	CSA	-	-	-	-	MASS	281, 293
INCISO HEADSHOWER SECTION	Wall-mounted adjustable shower head with arm	58180	CSA	CEC	DOE	-	-	MASS	302, 629
INCISO HEADSHOWER SECTION	Wall-mounted adjustable multi-function shower head with arm	58181	CSA	CEC	DOE	-	-	MASS	302, 629
INCISO HEADSHOWER SECTION	Wall-mounted adjustable shower head with arm.	58185	CSA	CEC	DOE	-	-	MASS	300, 624
INCISO HEADSHOWER SECTION	Ceiling-mounted shower head	58186	CSA	CEC	DOE	-	-	MASS	300, 631
INCISO HEADSHOWER SECTION	Wall-mounted adjustable shower head with arm.	58189	CSA	CEC	DOE	-	-	MASS	301, 627
INCISO	TRIM PARTS ONLY Wall-mounted wahbasin mixer trim, without waste	58190	CSA	CEC	DOE	-	-	MASS	289
INCISO	TRIM PARTS ONLY Wall-mounted wahbasin mixer trim, without waste	58192	CSA	CEC	DOE	-	-	MASS	289
INCISO	Ceiling-mounted washbasin spout only	58199	CSA	CEC	DOE	-	-	MASS	275
INCISO	Deck-mounted washbasin mixer control	58200	CSA	-	-	-	-	MASS	276
INCISO	TRIM PARTS ONLY External parts for thermostatic with 2 volume controls	58204	CSA	-	-	-	-	MASS	282
INCISO	TRIM PARTS ONLY External parts for thermostatic with 3 volume controls	58206	CSA	-	-	-	-	MASS	283
INCISO	TRIM PARTS ONLY External parts for thermostatic with 4 volume controls	58208	CSA	-	-	-	-	MASS	284
INCISO	TRIM PARTS ONLY External parts for thermostatic with 2 volume controls	58214	CSA	-	-	-	-	MASS	282
INCISO	TRIM PARTS ONLY External parts for thermostatic with 3 volume controls	58216	CSA	-	-	-	-	MASS	283
INCISO	TRIM PARTS ONLY External parts for thermostatic with 4 volume controls	58218	CSA	-	-	-	-	MASS	284
INCISO	TRIM PARTS ONLY External parts for thermostatic with 2 volume controls	58224	CSA	-	-	-	-	MASS	294
INCISO	TRIM PARTS ONLY External parts for thermostatic with 3 volume controls	58226	CSA	-	-	-	-	MASS	295

GESSI

SERIES	DESCRIPTIONS	CODE	CSA	CEC	DOE	CALGREEN	EPA WATERSENSE	MASSA-CHUSSETS	PAGE
INCISO	TRIM PARTS ONLY External parts for thermostatic with 4 volume controls	58228	CSA	-	-	-	-	MASS	296
INCISO	TRIM PARTS ONLY External parts for thermostatic with single volume control	58232	CSA	-	-	-	-	MASS	291
INCISO	TRIM PARTS ONLY External parts for 2-way thermostatic diverter and volume control	58234	CSA	-	-	-	-	MASS	292
INCISO	TRIM PARTS ONLY External parts for 3-way thermostatic diverter and volume control	58236	CSA	-	-	-	-	MASS	292
INCISO HEADSHOWER SECTION	Wall-mounted adjustable shower head with arm.	58248	CSA	CEC	DOE	-	-	MASS	300, 623
INCISO HEADSHOWER SECTION	Ceiling-mounted adjustable shower head with arm.	58252	CSA	CEC	DOE	-	-	MASS	300, 630
INCISO	TRIM PARTS ONLY External parts for individual thermostatic mixer	58254	CSA	-	-	-	-	MASS	285, 297
INCISO	TRIM PARTS ONLY External parts for individual thermostatic volume control	58263	CSA	-	-	-	-	MASS	285
INCISO	Ceiling-mounted washbasin spout only	58299	CSA	CEC	DOE	-	-	MASS	276
INCISO	TRIM PARTS ONLY External parts for thermostatic with 2 volume controls	58344	CSA	-	-	-	-	MASS	294
INCISO	TRIM PARTS ONLY External parts for thermostatic with 3 volume controls	58346	CSA	-	-	-	-	MASS	295
INCISO	TRIM PARTS ONLY External parts for thermostatic with 4 volume controls	58348	CSA	-	-	-	-	MASS	296
INCISO	TRIM PARTS ONLY External parts for individual thermostatic volume control	58363	CSA	-	-	-	-	MASS	297
INCISO	Safety grip-handle for bathtub and shower enclosure, 45 cm length	58423	-	-	-	-	-	-	316
INVERSO VENTAGLIO ORIGINI GESSI316 INCISO ANELLO INGRANAGGIO HABITO RETTANGOLO GOCCIA RILIEVO	Safety grip-handle for bathtub and shower enclosure	58424	-	-	-	-	-	-	98, 132, 184, 262, 316, 392, 432, 513, 557, 588, 617
INVERSO VENTAGLIO ORIGINI GESSI316 INCISO ANELLO INGRANAGGIO HABITO RETTANGOLO RILIEVO	Safety grip-handle for bathtub and shower enclosure	58430	-	-	-	-	-	-	98, 132, 184, 262, 317, 392, 432, 513, 560, 618
INVERSO VENTAGLIO ORIGINI GESSI316 INCISO ANELLO INGRANAGGIO HABITO RETTANGOLO RILIEVO	Safety grip-handle for bathtub and shower enclosure	58432	-	-	-	-	-	-	98, 133, 184, 263, 317, 392, 432, 513, 560, 618
INCISO	Paper-roll holder for horizontal/vertical installation.	58455	-	-	-	-	-	-	314
INCISO	12” towel rail.	58497	-	-	-	-	-	-	314
INCISO	18” towel rail.	58500	-	-	-	-	-	-	314
INCISO	Wall-mounted soap dish, white	58501	-	-	-	-	-	-	310
INCISO	Wall-mounted soap dish, black	58502	-	-	-	-	-	-	310
INCISO	24” towel rail.	58503	-	-	-	-	-	-	314
INCISO	31-1/2” towel rail.	58505	-	-	-	-	-	-	315
INCISO	Wall-mounted holder, white	58507	-	-	-	-	-	-	310
INCISO	Wall-mounted holder, black	58508	-	-	-	-	-	-	310
INCISO	Towel ring.	58509	-	-	-	-	-	-	315
INCISO	Wall-mounted liquid soap dispenser , white	58513	-	-	-	-	-	-	311
INCISO	Wall-mounted liquid soap dispenser - black	58514	-	-	-	-	-	-	311
INCISO	Wall-mounted brush holder, white	58519	-	-	-	-	-	-	311
INCISO	Wall-mounted brush holder, black	58520	-	-	-	-	-	-	311
INCISO	Wall-mounted robe hook.	58521	-	-	-	-	-	-	315

GESSI

SERIES	DESCRIPTIONS	CODE	CSA	CEC	DOE	CALGREEN	EPA WATERSENSE	MASSA-CHUSSETS	PAGE
VENTAGLIO ORIGINI INCISO VENTI20 ANELLO INGRANAGGIO HABITO	Standing soap holder, white	58525	-	-	-	-	-	-	128, 180, 312, 348, 388, 428, 508
VENTAGLIO ORIGINI INCISO VENTI20 ANELLO INGRANAGGIO HABITO	Standing soap holder, black	58526	-	-	-	-	-	-	128, 180, 312, 348, 388, 428, 508
VENTAGLIO ORIGINI INCISO VENTI20 ANELLO INGRANAGGIO HABITO	Standing tumbler holder, white	58531	-	-	-	-	-	-	128, 180, 312, 348, 388, 428, 508
VENTAGLIO ORIGINI INCISO VENTI20 ANELLO INGRANAGGIO HABITO	Standing tumbler holder, black	58532	-	-	-	-	-	-	128, 180, 312, 348, 388, 428, 508
INCISO	Standing soap dispenser holder, white	58537	-	-	-	-	-	-	313
INCISO	Standing soap dispenser holder, black	58538	-	-	-	-	-	-	313
ORIGINI INCISO VENTI20 HABITO	Standing brush holder, white	58543	-	-	-	-	-	-	181, 313, 349, 509
ORIGINI INCISO VENTI20 HABITO	Standing brush holder, black	58544	-	-	-	-	-	-	181, 313, 350, 509
INCISO	Towel rail for glass fixing - 12” length	58613	-	-	-	-	-	-	315
INCISO	Towel rail for glass fixing - 18” length	58615	-	-	-	-	-	-	316
INCISO	Towel rail for glass fixing - 24” length	58617	-	-	-	-	-	-	316
RILIEVO	Single lever washbasin mixer with pop-up assembly	59001	CSA	CEC	DOE	-	-	MASS	594
RILIEVO	Single lever washbasin mixer without pop-up assembly	59002	CSA	CEC	DOE	-	-	MASS	594
RILIEVO	Tall single lever washbasin mixer with pop-up assembly	59003	CSA	CEC	DOE	-	-	MASS	595
RILIEVO	Tall single lever washbasin mixer without pop-up assembly	59004	CSA	CEC	DOE	-	-	MASS	595
RILIEVO	Single lever washbasin mixer with pop-up assembly	59005	CSA	CEC	DOE	-	-	MASS	594
RILIEVO	Single lever washbasin mixer without pop-up assembly	59006	CSA	CEC	DOE	-	-	MASS	594
RILIEVO	Single lever bidet mixer with pop-up assembly	59007	CSA	-	-	-	-	MASS	599
RILIEVO	Tall single lever washbasin mixer with pop-up assembly	59009	CSA	CEC	DOE	-	-	MASS	595
RILIEVO	Tall single lever washbasin mixer without pop-up assembly	59010	CSA	CEC	DOE	-	-	MASS	595
RILIEVO	Widespread washbasin mixer with pop-up assembly	59011	CSA	CEC	DOE	-	-	MASS	596
RILIEVO	Widespread washbasin mixer without pop-up assembly	59012	CSA	CEC	DOE	-	-	MASS	596
SENSOR TAPS	Electronic basin mixer with temperature and water flow rate adjustment through under-basin control	59023	CSA	CEC	DOE	-	-	MASS	788
SENSOR TAPS	TRIM PARTS ONLY Wall mounted electronic separate control with temperature and flow rate setting box.	59029	CSA	CEC	DOE	-	-	MASS	789
RILIEVO	Three-hole roman tub set	59037	CSA	CEC	DOE	-	-	MASS	600
RILIEVO	Three-hole roman tub set	59043	CSA	CEC	DOE	-	-	MASS	601
RILIEVO	External parts wall-mounted mixer, medium spout, without waste	59089	-	-	-	-	-	-	596
RILIEVO	TRIM PARTS ONLY Wall mounted washbasin mixer trim, without waste.	59090	CSA	CEC	DOE	-	-	MASS	597
RILIEVO	Wall-mounted spout only	59100	CSA	CEC	DOE	-	-	MASS	597
RILIEVO	Wall mounted Bath spout only	59103	CSA	CEC	DOE	-	-	MASS	601
SENSOR TAPS	TRIM PARTS ONLY Wall-mounted electronic mixer.	59107	CSA	CEC	DOE	-	-	MASS	788
RILIEVO	TRIM PARTS ONLY Wall-mounted washbasin mixer control	59109	-	-	-	-	-	-	599
RILIEVO HANDSHOWER SETS	Handshower set	59123	CSA	CEC	DOE	-	-	MASS	605, 731
RILIEVO	TRIM PARTS ONLY Floor-mounted tub filler	59131	CSA	CEC	DOE	-	-	MASS	600
RILIEVO	TRIM PARTS ONLY External parts for thermostatic with single volume control	59132	CSA	-	-	-	-	MASS	601
RILIEVO	TRIM PARTS ONLY External parts for 2-way thermostatic diverter and volumne control	59134	CSA	-	-	-	-	MASS	602

GESSI

SERIES	DESCRIPTIONS	CODE	CSA	CEC	DOE	CALGREEN	EPA WATERSENSE	MASSA-CHUSSETS	PAGE
RILIEVO	TRIM PARTS ONLY External parts for 3-way thermostatic diverter and volume control	59136	CSA	-	-	-	-	MASS	602
RILIEVO HEADSHOWER SECTION	Wall-mounted adjustable shower head with arm.	59148	CSA	CEC	DOE	-	-	MASS	604, 623
RILIEVO HEADSHOWER SECTION	Ceiling-mounted adjustable shower head with arm.	59152	CSA	CEC	DOE	-	-	MASS	605, 630
INVERSO RILIEVO HEADSHOWER SECTION	Ceiling-mounted adjustable shower head with arm.	59155	CSA	CEC	DOE	-	-	MASS	81, 604, 633
RILIEVO	Fixed handshower hook.	59157	-	-	-	-	-	-	606
INVERSO RILIEVO HEADSHOWER SECTION	Wall-mounted adjustable shower head with arm.	59158	CSA	CEC	DOE	-	-	MASS	81, 604, 626
RILIEVO	Adjustable handshower hook	59160	-	-	-	-	-	-	607
RILIEVO	Wall elbow with built in water intake and fixed hook	59161	CSA	-	-	-	-	MASS	606
RILIEVO	Wall elbow with backplate	59169	CSA	-	-	-	-	MASS	606
HABITO RILIEVO	TRIM PARTS ONLY External parts for single exit pressure balance	59173	CSA	-	-	-	-	MASS	493, 603
HABITO RILIEVO	TRIM PARTS ONLY External parts for Pressure balance with 2-way diverter	59174	CSA	-	-	-	-	MASS	494, 603
RILIEVO HANDSHOWER SETS	Handshower and adjustable sliding rail set	59242	CSA	CEC	DOE	-	-	MASS	605, 736
RILIEVO	Handshower and adjustable sliding rail set	59245	CSA	CEC	DOE	-	-	MASS	605
RILIEVO	12” towel rail.	59397	-	-	-	-	-	-	614
RILIEVO	18” towel rail.	59400	-	-	-	-	-	-	614
RILIEVO	24” towel rail.	59403	-	-	-	-	-	-	615
RILIEVO	24” double wall mounted towel rail.	59405	-	-	-	-	-	-	615
RILIEVO	24” shelf with towel holder	59407	-	-	-	-	-	-	615
RILIEVO	Wall-mounted double tissue holder	59415	-	-	-	-	-	-	613
RILIEVO	Wall-mounted tissue holder with cover	59449	-	-	-	-	-	-	614
RILIEVO	Wall-mounted double tissue holder with cover	59450	-	-	-	-	-	-	614
RILIEVO	Wall-mounted tissue holder either vertical or horizontal	59455	-	-	-	-	-	-	613
RILIEVO	Wall-mounted soap dish, white	59501	-	-	-	-	-	-	610
RILIEVO	Wall-mounted soap dish, black	59502	-	-	-	-	-	-	610
RILIEVO	Wall-mounted holder, white	59507	-	-	-	-	-	-	610
RILIEVO	Wall-mounted holder, black	59508	-	-	-	-	-	-	610
RILIEVO	Towel ring.	59509	-	-	-	-	-	-	615
RILIEVO	Wall-mounted liquid soap dispenser , white	59513	-	-	-	-	-	-	611
RILIEVO	Wall-mounted liquid soap dispenser - black	59514	-	-	-	-	-	-	611
RILIEVO	Wall-mounted toilet brush holder	59519	-	-	-	-	-	-	611
RILIEVO	Wall-mounted garment hook	59521	-	-	-	-	-	-	616
RILIEVO	Wall-mounted double garment hook	59522	-	-	-	-	-	-	616
RILIEVO	Standing soap holder, white	59525	-	-	-	-	-	-	611
RILIEVO	Standing soap holder, black	59526	-	-	-	-	-	-	612
RILIEVO	Standing tumbler holder, white	59531	-	-	-	-	-	-	612
RILIEVO	Standing tumbler holder, black	59532	-	-	-	-	-	-	612
RILIEVO	Standing soap dispenser holder, white	59537	-	-	-	-	-	-	612
RILIEVO	Standing soap dispenser holder, black	59538	-	-	-	-	-	-	613
RILIEVO	Standing toilet brush holder	59543	-	-	-	-	-	-	613
VENTI20 RILIEVO	12” Shelf	59549	-	-	-	-	-	-	351, 616
VENTI20 RILIEVO	Corner shelf	59561	-	-	-	-	-	-	352, 616
RILIEVO	12” towel rail for glass fixing	59562	-	-	-	-	-	-	617
RILIEVO	18” towel rail for glass fixing	59564	-	-	-	-	-	-	617
RILIEVO	24” towel rail for glass fixing	59566	-	-	-	-	-	-	617
HI-FI	In-wall thermostatic rough valve for 1/2/3- way diverter function .	63001	CSA	-	-	-	-	MASS	640, 658
HI-FI	TRIM PARTS ONLY External parts for thermostatic mixer for two functions, with push-button on/off control	63004	CSA	-	-	-	-	MASS	640
HI-FI	TRIM PARTS ONLY External parts for thermostatic mixer for three functions, with push-button on/off control	63006	CSA	-	-	-	-	MASS	640

SERIES	DESCRIPTIONS	CODE	CSA	CEC	DOE	CALGREEN	EPA WATERSENSE	MASSA-CHUSSETS	PAGE
ORIGINI HI-FI HI-FI HI-FI	In-wall thermostatic rough valve for two separate functions.	63011	-	-	-	-	-	-	161, 641, 652, 659
HI-FI	TRIM PARTS ONLY External parts for thermostatic mixer for two separate functions, with push-button on/off controls.	63012	CSA	-	-	-	-	MASS	641
ORIGINI HI-FI HI-FI HI-FI	In-wall thermostatic rough valve for three simultaneous functions.	63013	-	-	-	-	-	-	161, 641, 652, 659
HI-FI	TRIM PARTS ONLY External parts for thermostatic mixer for three simultaneous functions, with push-button on/off controls.	63014	CSA	-	-	-	-	MASS	641
ORIGINI HI-FI HI-FI HI-FI	In-wall thermostatic rough valve for four simultaneous functions.	63015	-	-	-	-	-	-	162, 642, 653, 660
HI-FI	TRIM PARTS ONLY External parts for thermostatic mixer for four simultaneous functions, with push-button on/off controls.	63016	CSA	-	-	-	-	MASS	642
HI-FI	In-wall thermostatic rough valve for shelf mixer for two simultaneous functions.	63021	CSA	-	-	-	-	MASS	642
HI-FI	TRIM PARTS ONLY External parts for thermostatic shelf mixer for two simultaneous functions, with push-button on/off controls. Shelf made of black frosted safety glass.	63022	CSA	-	-	-	-	MASS	642
HI-FI	In-wall thermostatic rough valve for shelf mixer for three simultaneous functions.	63023	CSA	-	-	-	-	MASS	643
HI-FI	TRIM PARTS ONLY External parts for thermostatic shelf mixer for three simultaneous functions, with push-button on/off controls.Shelf made of black frosted safety glass.	63024	CSA	-	-	-	-	MASS	643
HI-FI	In-wall thermostatic rough valve for shelf mixer for four simultaneous functions.	63025	CSA	-	-	-	-	MASS	643
HI-FI	TRIM PARTS ONLY External parts for thermostatic shelf mixer for four simultaneous functions, with push-button on/off controls. Shelf made of black frosted safety glass.	63026	CSA	-	-	-	-	MASS	643
HI-FI HANDSHOWER SETS	Adjustable handshower hook	63057	-	-	-	-	-	-	644, 661, 732
INVERSO VENTAGLIO ORIGINI GESSI316 INCISO VENTI20 ANELLO INGRANAGGIO HABITO GOCCIA RILIEVO HI-FI HI-FI HANDSHOWER SETS	Magnetic anti-limestone handshower set	63099	CSA	CEC	DOE	-	-	MASS	84, 122, 172, 249, 305, 341, 380, 419, 500, 577, 606, 644, 660, 732
ANELLO	TRIM PARTS ONLY External parts for thermostatic with single volume control DIAMANTATO.	63133	-	-	-	-	-	-	368
ANELLO	TRIM PARTS ONLY External parts for 2-way diverterthermostatic and volume control DIAMANTATO.	63135	-	-	-	-	-	-	368
ANELLO	TRIM PARTS ONLY External parts for 3-way diverterthermostatic and volume control DIAMANTATO.	63137	-	-	-	-	-	-	369
VENTAGLIO INGRANAGGIO	TRIM PARTS ONLY External parts for thermostatic with single volume control RIGATO.	63139	-	-	-	-	-	-	109, 407
VENTAGLIO INGRANAGGIO	TRIM PARTS ONLY External parts for 2-way diverter thermostatic and volume control RIGATO.	63141	-	-	-	-	-	-	110, 408
VENTAGLIO INGRANAGGIO	TRIM PARTS ONLY External parts for 3-way diverterthermostatic and volume control RIGATO.	63143	-	-	-	-	-	-	110, 408
GESSI316 HI-FI HI-FI HANDSHOWER SETS	Magnetic anti-limestone handshower set	63199	CSA	CEC	DOE	-	-	MASS	249, 644, 660, 732
OUTDOOR	TRIM PARTS ONLY Two functions thermostatic OUTDOOR shower column	63204	CSA	-	-	-	-	MASS	765
OUTDOOR	In-floor rough valve for thermosatic shower column	63215	CSA	-	-	-	-	MASS	765
OUTDOOR	Lever/handshower kit for 63204	63216	CSA	CEC	-	-	-	MASS	765
ANELLO	Single lever washbasin mixer with pop-up assembly	63301	CSA	CEC	DOE	-	EPA	MASS	360
ANELLO	Single lever washbasin mixer without pop-up assembly	63302	CSA	CEC	DOE	-	EPA	MASS	360
ANELLO	Tall single lever washbasin mixer without pop-up assembly	63304	CSA	CEC	DOE	-	EPA	MASS	360
ANELLO	Tall single lever washbasin mixer without pop-up assembly	63306	CSA	CEC	DOE	-	EPA	MASS	360
ANELLO	Deck-mounted washbasin mixer with separate control without pop-up assembly	63315	CSA	CEC	DOE	-	EPA	MASS	361
ANELLO INGRANAGGIO	Deck-mounted washbasin spout only without pop-up assembly	63321	CSA	CEC	DOE	-	-	MASS	361, 401

GESSI

SERIES	DESCRIPTIONS	CODE	CSA	CEC	DOE	CALGREEN	EPA WATERSENSE	MASSA-CHUSSETS	PAGE
ANELLO INGRANAGGIO	Deck-mounted washbasin spout only without pop-up assembly	63323	CSA	CEC	DOE	-	-	MASS	362, 402
ANELLO	TRIM PARTS ONLY floor-mounted tub filler	63328	CSA	CEC	DOE	-	-	MASS	365
VENTAGLIO ORIGINI ANELLO INGRANAGGIO HABITO HANDSHOWER SETS	Handshower set	63329	CSA	CEC	DOE	-	-	MASS	122, 172, 380, 419, 500, 730
VENTAGLIO ANELLO INGRANAGGIO	TRIM PARTS ONLY External parts for thermostatic with singlevolume control	63331	CSA	-	-	-	-	MASS	111, 369, 409
VENTAGLIO ANELLO INGRANAGGIO	TRIMS PARTS ONLY External parts for thermostatic with single volume control	63332	CSA	-	-	-	-	MASS	111, 370, 409
VENTAGLIO ANELLO INGRANAGGIO	TRIM PARTS ONLY External parts for 2-way diverterthermostatic and volume control	63333	CSA	-	-	-	-	MASS	112, 370, 410
VENTAGLIO ANELLO INGRANAGGIO	TRIMS PARTS ONLY External parts for 2 -way diverter thermostatic and volume control	63334	CSA	-	-	-	-	MASS	112, 371, 410
VENTAGLIO ANELLO INGRANAGGIO	TRIM PARTS ONLY External parts for 3-way diverter thermostatic and volume control	63335	CSA	-	-	-	-	MASS	113, 371, 411
VENTAGLIO ANELLO INGRANAGGIO	TRIMS PARTS ONLY External parts for 3 -way diverter thermostatic and volume control	63336	CSA	-	-	-	-	MASS	113, 372, 411
ANELLO	TRIM PARTS ONLY. Wall-mounted bath mixer control	63343	-	-	-	-	-	-	367
ANELLO	TRIM PARTS ONLY. Wall-mounted bath mixer control	63345	-	-	-	-	-	-	367
ORIGINI ANELLO INGRANAGGIO HEADSHOWER SECTION	Wall-mounted adjustable shower head with arm.	63348	CSA	CEC	DOE	-	-	MASS	170, 379, 418, 624
VENTAGLIO ORIGINI ANELLO INGRANAGGIO HABITO HEADSHOWER SECTION	Ceiling-mounted, shower head with arm, custom length	63350	CSA	CEC	DOE	-	-	MASS	120, 170, 379, 419, 500, 631
ANELLO	Widespread washbasin mixer without pop-up assembly	63351	CSA	CEC	DOE	-	EPA	MASS	361
VENTAGLIO ORIGINI ANELLO INGRANAGGIO HABITO HEADSHOWER SECTION	Ceiling-mounted adjustable shower head with arm.	63352	CSA	CEC	DOE	-	-	MASS	120, 170, 379, 418, 499, 631
ANELLO	Widespread washbasin mixer without pop-up assembly	63353	CSA	CEC	DOE	-	EPA	MASS	361
INVERSO ANELLO HEADSHOWER SECTION	Wall-mounted adjustable shower head with arm DIAMANTATO.	63354	CSA	CEC	DOE	-	-	MASS	80, 378, 628
INVERSO ANELLO HEADSHOWER SECTION	Wall-mounted adjustable multi-function shower head with arm DIAMANTATO.	63356	CSA	CEC	DOE	-	-	MASS	80, 378, 628
ANELLO	TRIM PARTS ONLY Wall mounted mixer control with Ø35 cartridge	63361	CSA	-	-	-	-	MASS	366
ANELLO	TRIM PARTS ONLY External parts for single exit pressure balance	63373	CSA	-	-	-	-	MASS	372
ANELLO	TRIM PARTS ONLY External parts for pressure balance with 2-way diverter	63374	CSA	-	-	-	-	MASS	373
ANELLO	TRIMS PARTS ONLY wall-mounted washbasin mixer trim, without waste	63381	CSA	CEC	DOE	-	-	MASS	363
ANELLO	TRIMS PARTS ONLY wall-mounted washbasin mixer trim, without waste	63388	CSA	CEC	DOE	-	-	MASS	362
INVERSO VENTAGLIO VENTI20 ANELLO ANELLO INGRANAGGIO INGRANAGGIO	Wall-mounted washbasin mixer rough valve	63397	-	-	-	-	-	-	54, 66, 105, 326, 362, 363, 402, 403

GESSI

SERIES	DESCRIPTIONS	CODE	CSA	CEC	DOE	CALGREEN	EPA WATERSENSE	MASSA-CHUSSETS	PAGE
VENTAGLIO ORIGINI VENTI20 ANELLO INGRANAGGIO HABITO HABITO HABITO HABITO HABITO HABITO RILIEVO	Ceiling-mounted washbasin spout only	63399	CSA	CEC	DOE	-	-	MASS	106, 157, 328, 364, 404, 444, 452, 460, 468, 476, 484, 598
ANELLO	Deck-mounted washbasin mixer control	63400	CSA	-	-	-	-	MASS	362
ANELLO INGRANAGGIO	Wall-mounted washbasin spout only	63403	CSA	CEC	DOE	-	-	MASS	363, 403
ANELLO INGRANAGGIO	Long wall-mounted spout basin	63404	CSA	CEC	DOE	CAL	-	MASS	363, 403
INVERSO VENTAGLIO VENTI20	In-wall for wall-mounted washbasin remote control. One-way	63412	-	-	-	-	-	-	56, 68, 107, 330
INVERSO ANELLO HEADSHOWER SECTION	Wall-mounted adjustable shower head with arm DIAMANTATO.	63448	CSA	CEC	DOE	-	-	MASS	79, 378, 625
INVERSO ANELLO HEADSHOWER SECTION	Ceiling -mounted shower head with arm DIAMANTATO.	63452	CSA	CEC	DOE	-	-	MASS	79, 378, 632
VENTAGLIO ORIGINI ANELLO INGRANAGGIO HABITO	Wall elbow with built in water intake and fixed hook	63461	CSA	-	-	-	-	MASS	122, 173, 382, 421, 502
VENTAGLIO ORIGINI ANELLO INGRANAGGIO HABITO	Wall-elbow with backplate	63469	CSA	-	-	-	-	MASS	122, 173, 382, 421, 502
ANELLO HABITO HANDSHOWER SETS	Handshower and adjustable sliding rail set. DIAMANTATO	63482	CSA	CEC	DOE	-	-	MASS	379, 479, 734
VENTAGLIO ORIGINI VENTI20 ANELLO INGRANAGGIO HABITO HABITO HABITO HABITO HABITO HABITO RILIEVO	Ceiling-mounted washbasin spout only	63499	CSA	CEC	DOE	CAL	-	MASS	107, 157, 329, 364, 404, 445, 453, 461, 469, 477, 485, 598
INGRANAGGIO	Single lever washbasin mixer with pop-up assembly	63501	CSA	CEC	DOE	-	EPA	MASS	400
INGRANAGGIO	Single lever washbasin mixer without pop-up assembly	63502	CSA	CEC	DOE	-	EPA	MASS	400
INGRANAGGIO	Tall single lever washbasin mixer without pop-up assembly	63504	CSA	CEC	DOE	-	EPA	MASS	400
INGRANAGGIO	Tall single lever washbasin mixer without pop-up assembly	63506	CSA	CEC	DOE	-	EPA	MASS	400
INGRANAGGIO	Deck-mounted washbasin mixer with separate control without pop-up assembly	63515	CSA	CEC	DOE	-	EPA	MASS	401
INGRANAGGIO	TRIM PARTS ONLY floor-mounted tub filler	63528	CSA	CEC	DOE	-	-	MASS	405
INGRANAGGIO	TRIM PARTS ONLY. Wall-mounted bath mixer control	63543	-	-	-	-	-	-	406
INGRANAGGIO	TRIM PARTS ONLY. Wall-mounted bath mixer control	63545	-	-	-	-	-	-	406
INVERSO INGRANAGGIO HEADSHOWER SECTION	Wall-mounted adjustable shower head with arm RIGATO.	63548	CSA	CEC	DOE	-	-	MASS	79, 418, 625
INGRANAGGIO	Widespread washbasin mixer without pop-up assembly	63551	CSA	CEC	DOE	-	EPA	MASS	401
INVERSO INGRANAGGIO HEADSHOWER SECTION	Ceiling -mounted shower head with arm RIGATO.	63552	CSA	CEC	DOE	-	-	MASS	80, 418, 632
INGRANAGGIO	Widespread washbasin mixer without pop-up assembly	63553	CSA	CEC	DOE	-	EPA	MASS	401
INVERSO INGRANAGGIO HEADSHOWER SECTION	Wall-mounted anti-limescale showerhead. RIGATO	63554	CSA	CEC	DOE	-	-	MASS	80, 417, 628

GESSI

SERIES	DESCRIPTIONS	CODE	CSA	CEC	DOE	CALGREEN	EPA WATERSENSE	MASSA-CHUSSETS	PAGE
INVERSO INGRANAGGIO HEADSHOWER SECTION	Multifunctional adjustable wall-mounted anti-limescale showerhead. RIGATO	63556	CSA	CEC	DOE	-	-	MASS	81, 417, 628
INGRANAGGIO	TRIM PARTS ONLY Wall mounted mixer control with Ø35 cartridge	63561	CSA	-	-	-	-	MASS	407
INGRANAGGIO	TRIM PARTS ONLY External parts for single exit pressure balance	63573	CSA	-	-	-	-	MASS	412
INGRANAGGIO	TRIM PARTS ONLY External parts for pressure balance with 2-way diverter	63574	CSA	-	-	-	-	MASS	412
INGRANAGGIO	TRIMS PARTS ONLY wall-mounted washbasin mixer trim, without waste	63581	CSA	CEC	DOE	-	-	MASS	403
INGRANAGGIO HABITO HANDSHOWER SETS	Handshower and adjustable sliding rail set. RIGATO	63582	CSA	CEC	DOE	-	-	MASS	419, 471, 735
INGRANAGGIO	TRIMS PARTS ONLY wall-mounted washbasin mixer trim, without waste	63588	CSA	CEC	DOE	-	-	MASS	402
INGRANAGGIO	Deck-mounted washbasin mixer control	63600	CSA	-	-	-	-	MASS	402
VENTAGLIO	Wall-mounted white soap holder	63601	-	-	-	-	-	-	126
VENTAGLIO	Wall-mounted black soap holder	63602	-	-	-	-	-	-	126
ANELLO INGRANAGGIO	Wall-mounted Bath spout only	63603	CSA	-	-	-	-	MASS	366, 405
VENTAGLIO	Wall-mounted white tumbler holder	63607	-	-	-	-	-	-	126
VENTAGLIO	Wall-mounted black tumbler holder	63608	-	-	-	-	-	-	126
VENTAGLIO	Wall-mounted white dispenser	63613	-	-	-	-	-	-	127
VENTAGLIO	Wall-mounted black dispenser	63614	-	-	-	-	-	-	127
VENTAGLIO	Wall-mounted white toilet brush holder	63619	-	-	-	-	-	-	127
VENTAGLIO	Wall-mounted black toilet brush holder	63620	-	-	-	-	-	-	127
VENTAGLIO	Wall-mounted paper roll holder	63655	-	-	-	-	-	-	130
VENTAGLIO	12” Towel rail	63697	-	-	-	-	-	-	130
VENTAGLIO	18” Towel rail	63700	-	-	-	-	-	-	130
ANELLO	Wall-mounted soap dish, white	63701	-	-	-	-	-	-	386
ANELLO	Wall-mounted soap dish, black	63702	-	-	-	-	-	-	386
VENTAGLIO	24” Towel rail	63703	-	-	-	-	-	-	130
ANELLO	Wall-mounted holder, white	63707	-	-	-	-	-	-	386
ANELLO	Wall-mounted holder, black	63708	-	-	-	-	-	-	386
VENTAGLIO	Towel ring	63709	-	-	-	-	-	-	131
ANELLO	Wall-mounted liquid soap dispenser , white	63713	-	-	-	-	-	-	387
ANELLO	Wall-mounted liquid soap dispenser - black	63714	-	-	-	-	-	-	387
ANELLO	Wall-mounted brush holder, white	63719	-	-	-	-	-	-	387
ANELLO	Wall-mounted brush holder, black	63720	-	-	-	-	-	-	387
ANELLO	Wall-mounted garment hook	63721	-	-	-	-	-	-	391
VENTAGLIO	Towel rail for glass fixing - 12” Length	63724	-	-	-	-	-	-	131
VENTAGLIO	Towel rail for glass fixing - 18” Length	63726	-	-	-	-	-	-	131
VENTAGLIO	Towel rail for glass fixing - 24” Length	63728	-	-	-	-	-	-	132
VENTAGLIO ANELLO INGRANAGGIO	Standing brush holder, white	63743	-	-	-	-	-	-	129, 389, 429
VENTAGLIO ANELLO INGRANAGGIO	Standing brush holder, black	63744	-	-	-	-	-	-	129, 389, 429
ANELLO	Wall-mounted tissue holder. Vertical or horizontal application	63755	-	-	-	-	-	-	390
ANELLO	Wall-mounted 12” towel bar	63797	-	-	-	-	-	-	390
ANELLO	Wall-mounted 18” towel bar	63800	-	-	-	-	-	-	390
INGRANAGGIO	Wall-mounted soap dish, white	63801	-	-	-	-	-	-	426
INGRANAGGIO	Wall-mounted soap dish, black	63802	-	-	-	-	-	-	426
ANELLO	Wall-mounted 24” towel bar	63803	-	-	-	-	-	-	390
INGRANAGGIO	Wall-mounted holder, white	63807	-	-	-	-	-	-	426
INGRANAGGIO	Wall-mounted holder, black	63808	-	-	-	-	-	-	426
ANELLO	Towel ring	63809	-	-	-	-	-	-	391
INGRANAGGIO	Wall-mounted liquid soap dispenser , white	63813	-	-	-	-	-	-	427
INGRANAGGIO	Wall-mounted liquid soap dispenser - black	63814	-	-	-	-	-	-	427
INGRANAGGIO	Wall-mounted brush holder, white	63819	-	-	-	-	-	-	427
INGRANAGGIO	Wall-mounted brush holder, black	63820	-	-	-	-	-	-	427
INGRANAGGIO	Wall-mounted garment hook	63821	-	-	-	-	-	-	431
ANELLO	Towel rail for glass fixing - 12” length	63824	-	-	-	-	-	-	391

GESSI

SERIES	DESCRIPTIONS	CODE	CSA	CEC	DOE	CALGREEN	EPA WATERSENSE	MASSA-CHUSSETS	PAGE
ANELLO	Towel rail for glass fixing - 18” length	63826	-	-	-	-	-	-	391
ANELLO	Towel rail for glass fixing - 24” length	63828	-	-	-	-	-	-	392
INGRANAGGIO	Wall-mounted tissue holder. Vertical or horizontal application	63855	-	-	-	-	-	-	430
INGRANAGGIO	Wall-mounted 12” towel bar	63897	-	-	-	-	-	-	430
INGRANAGGIO	Wall-mounted 18” towel bar	63900	-	-	-	-	-	-	430
INGRANAGGIO	Wall-mounted 24” towel bar	63903	-	-	-	-	-	-	430
INGRANAGGIO	Towel ring	63909	-	-	-	-	-	-	431
INGRANAGGIO	Towel rail for glass fixing - 12” length	63924	-	-	-	-	-	-	431
INGRANAGGIO	Towel rail for glass fixing - 18” length	63926	-	-	-	-	-	-	431
INGRANAGGIO	Towel rail for glass fixing - 24” length	63928	-	-	-	-	-	-	432
VENTI20	Single lever washbasin mixer with pop-up assembly	65001	CSA	CEC	DOE	-	EPA	MASS	324
VENTI20	Single lever washbasin mixer without pop-up assembly	65002	CSA	CEC	DOE	-	EPA	MASS	324
VENTI20	Tall single lever washbasin mixer with pop-up assembly	65003	CSA	CEC	DOE	-	EPA	MASS	324
VENTI20	Tall single lever washbasin mixer without pop-up assembly	65004	CSA	CEC	DOE	-	EPA	MASS	324
VENTI20	Widespread washbasin mixer with pop-up assembly	65011	CSA	CEC	DOE	-	EPA	MASS	325
VENTI20	Widespread washbasin mixer with pop-up assembly	65012	CSA	CEC	DOE	-	EPA	MASS	325
VENTI20	Widespread washbasin mixer without pop-up assembly	65013	CSA	CEC	DOE	-	EPA	MASS	325
VENTI20	Widespread washbasin mixer without pop-up assembly	65014	CSA	CEC	DOE	-	EPA	MASS	325
VENTI20	Widespread washbasin mixer with pop-up assembly	65015	CSA	CEC	DOE	-	EPA	MASS	326
VENTI20	Widespread washbasin mixer without pop-up assembly	65016	CSA	CEC	DOE	-	EPA	MASS	326
VENTI20	Deck-mounted washbasin spout only without pop-up assembly	65023	CSA	CEC	DOE	-	-	MASS	327
VENTI20	Deck-mounted washbasin spout only without pop-up assembly	65025	CSA	CEC	DOE	-	-	MASS	327
VENTI20	Four-hole roman tub set	65045	CSA	CEC	DOE	-	-	MASS	331
VENTI20	TRIM PARTS ONLY Wall-mounted washbasin mixer trim	65088	CSA	CEC	DOE	-	-	MASS	326
VENTI20	TRIM PARTS ONLY Wall-mounted washbasin mixer trim	65090	CSA	CEC	DOE	-	-	MASS	327
INCISO VENTI20	Floor-mounted tub filler in-floor rough valve	65099	CSA	CEC	DOE	-	-	MASS	278, 290, 331
VENTI20	Deck mounted washbasin mixer control	65100	CSA	-	-	-	-	MASS	329
VENTI20	Wall-mounted washbasin spout only	65101	CSA	CEC	DOE	-	-	MASS	328
VENTI20	Wall-mounted bath spout only 1/2’ connections	65103	CSA	-	-	-	-	MASS	332
VENTI20	TRIM PARTS ONLY Wall-mounted washbasin mixer control	65109	CSA	-	-	-	-	MASS	330
VENTI20	Wall-mounted widespread bath group	65113	CSA	CEC	DOE	-	-	MASS	330
VENTI20	Deck-mounted widespread bath group	65115	CSA	CEC	DOE	-	-	MASS	330
VENTI20 HANDSHOWER SETS	Handshower set	65123	CSA	CEC	DOE	-	-	MASS	341, 730
VENTI20	TRIM PARTS ONLY Floor-mounted tub filler	65128	CSA	CEC	DOE	-	-	MASS	331
VENTI20	TRIM PARTS ONLY Wall mounted mixer control	65131	-	-	-	-	-	-	332
VENTI20	TRIM PARTS ONLY External parts for thermostatic with single volume control	65133	CSA	-	-	-	-	MASS	333
VENTI20	TRIM PARTS ONLY External parts for 2-way thermostatic diverter and volume control	65135	CSA	-	-	-	-	MASS	333
VENTI20	TRIM PARTS ONLY External parts for 3-way thermostatic diverter and volume control	65137	CSA	-	-	-	-	MASS	334
VENTI20 HANDSHOWER SETS	Handshower and adjustable sliding rail set	65142	CSA	CEC	DOE	-	-	MASS	341, 736
VENTI20 HEADSHOWER SECTION	Wall-mounted adjustable shower head with arm.	65148	CSA	CEC	DOE	-	-	MASS	340, 624
VENTI20 HEADSHOWER SECTION	Wall-mounted adjustable shower head with arm.	65149	CSA	CEC	DOE	-	-	MASS	340, 624
VENTI20 HEADSHOWER SECTION	Ceiling-mounted adjustable shower head with arm.	65152	CSA	CEC	DOE	-	-	MASS	340, 632
VENTI20 HEADSHOWER SECTION	Ceiling-mounted adjustable shower head with arm.	65153	CSA	CEC	DOE	-	-	MASS	340, 632
VENTI20	Handshower	65154	CSA	CEC	DOE	-	-	MASS	344
VENTI20 HEADSHOWER SECTION	Wall-mounted adjustable shower head with arm:	65156	CSA	CEC	DOE	-	-	MASS	339, 627
VENTI20	Fixed handshower hook.	65157	-	-	-	-	-	-	343
VENTI20 HEADSHOWER SECTION	Wall-mounted adjustable multi-function shower head with arm:	65158	CSA	CEC	DOE	-	-	MASS	339, 627

GESSI

SERIES	DESCRIPTIONS	CODE	CSA	CEC	DOE	CALGREEN	EPA WATERSENSE	MASSA-CHUSSETS	PAGE
VENTI20	Adjustable handshower hook.	65160	-	-	-	-	-	-	343
VENTI20	Wall elbow with built in water intake and fixed hook	65161	CSA	-	-	-	-	MASS	343
VENTI20	Wall elbow with backplate	65169	CSA	-	-	-	-	MASS	343
VENTI20	TRIM PARTS ONLY External parts for single exit pressure	65172	CSA	-	-	-	-	MASS	334
VENTI20	TRIM PARTS ONLY External parts for pressure balance with2-way diverter	65174	CSA	-	-	-	-	MASS	335
VENTI20	TRIM PARTS ONLY External parts for thermostatic with 2 volume controls	65200	-	-	-	-	-	-	335
VENTI20	TRIM PARTS ONLY External parts for thermostatic with 2 volume controls	65202	-	-	-	-	-	-	336
VENTI20	TRIM PARTS ONLY External parts for thermostatic with 3 volume controls	65204	-	-	-	-	-	-	336
VENTI20	TRIM PARTS ONLY External parts for thermostatic with 3 volume controls	65206	-	-	-	-	-	-	337
VENTI20	TRIM PARTS ONLY External parts for thermostatic with 4 volume controls	65208	-	-	-	-	-	-	337
VENTI20	TRIM PARTS ONLY External parts for thermostatic with 4 volume controls	65210	-	-	-	-	-	-	338
HI-FI	TRIM PARTS ONLY External parts for thermostatic mixer for two simultaneous functions, with push-button on/off controls.	65222	CSA	-	-	-	-	MASS	659
HI-FI	TRIM PARTS ONLY External parts for thermostatic mixer for three simultaneous functions, with push-button on/off controls.	65224	CSA	-	-	-	-	MASS	659
HI-FI	TRIM PARTS ONLY External parts for thermostatic mixer for four simultaneous functions, with push-button on/off controls.	65226	CSA	-	-	-	-	MASS	660
HI-FI	TRIM PARTS ONLY External parts for thermostatic mixer for two functions, with push-button on/off control	65232	CSA	-	-	-	-	MASS	658
HI-FI	TRIM PARTS ONLY External parts for thermostatic mixer for three functions, with push-button on/off control	65234	CSA	-	-	-	-	MASS	658
VENTI20	TRIM PARTS ONLY External parts for individual thermostatic volume control	65247	-	-	-	-	-	-	339
VENTAGLIO ORIGINI GESSI316 INCISO VENTI20 ANELLO INGRANAGGIO HABITO CASCATA	Wall-fixing cascade spout	65295	CSA	-	DOE	-	-	MASS	121, 171, 251, 303, 342, 381, 421, 501, 724
VENTI20	TRIM PARTS ONLY External parts for individual thermostatic mixer	65316	-	-	-	-	-	-	338
VENTI20	Wall-mounted soap dish, white	65401	-	-	-	-	-	-	346
VENTI20	Wall-mounted soap dish, black	65402	-	-	-	-	-	-	346
VENTI20	Wall-mounted holder, white	65407	-	-	-	-	-	-	346
VENTI20	Wall-mounted holder, black	65408	-	-	-	-	-	-	346
VENTI20	Wall-mounted liquid soap dispenser , white	65413	-	-	-	-	-	-	347
VENTI20	Wall-mounted liquid soap dispenser - black	65414	-	-	-	-	-	-	347
VENTI20	Wall-mounted brush holder, white	65419	-	-	-	-	-	-	347
VENTI20	Wall-mounted brush holder, black	65420	-	-	-	-	-	-	347
VENTI20	Standing soap dispenser holder, white	65437	-	-	-	-	-	-	349
VENTI20	Standing soap dispenser holder, black	65438	-	-	-	-	-	-	349
VENTI20	Wall-mounted paper roll holder with cover	65449	-	-	-	-	-	-	350
VENTI20	Wall-mounted tissue holder. Vertical or horizontal application	65455	-	-	-	-	-	-	350
VENTI20	Wall-mounted 12” towel bar	65497	-	-	-	-	-	-	350
VENTI20	Wall-mounted 18” towel bar	65500	-	-	-	-	-	-	351
VENTI20	Wall-mounted 24” towel bar	65503	-	-	-	-	-	-	351
VENTI20	Towel ring	65509	-	-	-	-	-	-	351
VENTI20	Towel rail for glass fixing - 12” length	65511	-	-	-	-	-	-	352
VENTI20	Towel rail for glass fixing - 18” length	65513	-	-	-	-	-	-	352
VENTI20	Towel rail for glass fixing - 24” length	65515	-	-	-	-	-	-	353
VENTI20	Safety grip-handle for bathtub and shower enclosure	65517	-	-	-	-	-	-	353
VENTI20	Safety grip-handle for bathtub and shower enclosure	65519	-	-	-	-	-	-	353
VENTI20	Wall-mounted robe hook.	65521	-	-	-	-	-	-	352
VENTI20	Safety grip-handle for bathtub and shower enclosure	65522	-	-	-	-	-	-	353
VENTI20	Razor holder	65523	-	-	-	-	-	-	349
VENTI20 TOTAL LOOK	Counter washbasin in stailess steel RIGATO, without overflow waste. It can be combined with waste 54597.	65601	CSA	-	-	-	-	MASS	356, 772
ORIGINI	Single lever washbasin mixer with pop-up assembly.	66001	CSA	CEC	DOE	CAL	-	MASS	153
ORIGINI	Single lever washbasin mixer without pop-up assembly.	66002	CSA	CEC	DOE	CAL	-	MASS	153
ORIGINI	Tall single lever washbasin mixer with pop-up assembly.	66003	CSA	CEC	DOE	CAL	-	MASS	154
ORIGINI	Tall single lever washbasin mixer without pop-up assembly.	66004	CSA	CEC	DOE	CAL	-	MASS	154

GESSI

SERIES	DESCRIPTIONS	CODE	CSA	CEC	DOE	CALGREEN	EPA WATERSENSE	MASSA-CHUSSETS	PAGE
ORIGINI	Medium single lever washbasin mixer with pop-up assembly.	66005	CSA	CEC	DOE	CAL	-	MASS	153
ORIGINI	Medium single lever washbasin mixer without pop-up assembly.	66006	CSA	CEC	DOE	CAL	-	MASS	153
ORIGINI	Widespread washbasin mixer with pop-up assembly	66013	CSA	CEC	DOE	CAL	-	MASS	154
ORIGINI	Widespread washbasin mixer without pop-up assembly	66014	CSA	CEC	DOE	CAL	-	MASS	154
ORIGINI	Deck-mounted medium washbasin spout only without pop-up assembly	66021	CSA	CEC	DOE	CAL	-	MASS	156
ORIGINI	Deck-mounted tall washbasin spout only without pop-up assembly	66025	CSA	CEC	DOE	CAL	-	MASS	156
ORIGINI	TRIM PARTS ONLY Floor-mounted tub filler	66028	-	-	-	-	-	-	159
ORIGINI	TRIM PARTS ONLY. Wall-mounted bath mixer control	66036	-	-	-	-	-	-	160
ORIGINI	Four-hole roman tub set.	66037	CSA	CEC	DOE	-	-	MASS	158
ORIGINI	Three-hole roman tub set	66043	CSA	CEC	DOE	-	-	MASS	159
ORIGINI	TRIM PARTS ONLY Wall-mounted washbasin mixer trim	66088	-	-	-	-	-	-	155
ORIGINI	TRIM PARTS ONLY Wall-mounted wahbasin mixer trim, without waste	66090	-	-	-	-	-	-	155
ORIGINI	Deck mounted washbasin mixer control	66100	CSA	-	DOE	CAL	-	MASS	158
ORIGINI HABITO HABITO HABITO HABITO HABITO HABITO HABITO	Wall-mounted washbasin spout only	66102	CSA	CEC	DOE	CAL	-	MASS	156, 444, 452, 460, 468, 476, 484
ORIGINI HABITO	Wall mounted Bath spout only	66103	CSA	CEC	-	-	-	MASS	160, 490
ORIGINI HABITO HABITO HABITO HABITO HABITO HABITO HABITO	Wall-mounted washbasin spout only	66104	CSA	CEC	DOE	CAL	-	MASS	156, 444, 452, 460, 468, 476, 484
ORIGINI	TRIM PARTS ONLY Wall-mounted washbasin mixer control	66109	-	-	-	-	-	-	158
ORIGINI HANDSHOWER SETS	Handshower set	66123	CSA	CEC	DOE	-	-	MASS	172, 730
ORIGINI	TRIM PARTS ONLY External parts for thermostatic with single volume control	66133	-	-	-	-	-	-	162
ORIGINI	TRIM PARTS ONLY External parts for 2-way diverter thermostatic and volume control	66135	-	-	-	-	-	-	163
ORIGINI	TRIM PARTS ONLY External parts for 3-way diverter thermostatic and volume control	66137	-	-	-	-	-	-	163
ORIGINI HANDSHOWER SETS	Handshower and adjustable sliding rail set	66142	CSA	CEC	DOE	-	-	MASS	170, 735
VENTAGLIO ORIGINI HABITO HEADSHOWER SECTION	Wall-mounted adjustable shower head with arm.	66148	CSA	CEC	DOE	-	-	MASS	119, 169, 499, 622
ORIGINI HEADSHOWER SECTION	Wall-mounted anti limestone and adjustable head shower	66150	-	-	-	-	-	-	169, 622
ORIGINI INCISO HABITO HEADSHOWER SECTION	Wall-mounted adjustable shower head with arm.	66156	CSA	CEC	DOE	-	-	MASS	169, 301, 499, 626
ORIGINI	Fixed handshower hook. Can be combined with the insert 66600 and 66602 of the desired finish.	66157	-	-	-	-	-	-	173
ORIGINI INCISO HABITO HEADSHOWER SECTION	Wall-mounted adjustable multi-function shower head with arm:	66158	CSA	CEC	DOE	-	-	MASS	169, 302, 499, 627
ORIGINI	Wall elbow with built in water intake and fixed hook	66161	CSA	-	-	-	-	MASS	172
ORIGINI	Wall elbow with backplate	66169	CSA	-	-	-	-	MASS	173
ORIGINI	TRIM PARTS ONLY External parts for single exit pressure	66172	-	-	-	-	-	-	164
ORIGINI	TRIM PARTS ONLY External parts for pressure balance with2-way diverter	66174	-	-	-	-	-	-	164
ORIGINI	TRIM PARTS ONLY External parts for thermostatic with 2 volume controls	66200	-	-	-	-	-	-	165
ORIGINI	TRIM PARTS ONLY External parts for thermostatic with 2 volume controls	66202	-	-	-	-	-	-	165
ORIGINI	TRIM PARTS ONLY External parts for thermostatic with 3 volume controls	66204	-	-	-	-	-	-	166
ORIGINI	TRIM PARTS ONLY External parts for thermostatic with 3 volume controls	66206	-	-	-	-	-	-	166
ORIGINI	TRIM PARTS ONLY External parts for thermostatic with 4 volume controls	66208	-	-	-	-	-	-	167
ORIGINI	TRIM PARTS ONLY External parts for thermostatic with 4 volume controls	66214	-	-	-	-	-	-	167
OUTDOOR	ORIGINI Lever/Handshower kit for 63204	66216	CSA	CEC	DOE	-	-	MASS	766

GESSI

SERIES	DESCRIPTIONS	CODE	CSA	CEC	DOE	CALGREEN	EPA WATERSENSE	MASSA-CHUSSETS	PAGE
ORIGINI	TRIM PARTS ONLY External parts for individual thermostatic volume control	66218	-	-	-	-	-	-	168
ORIGINI HI-FI	TRIM PARTS ONLY External parts for thermostatic mixer for two functions, with push-button on/off control	66222	-	-	-	-	-	-	161, 652
ORIGINI HI-FI	TRIM PARTS ONLY External parts for thermostatic mixer for three functions, with push-button on/off control	66224	-	-	-	-	-	-	161, 652
ORIGINI HI-FI	TRIM PARTS ONLY External parts for thermostatic mixer for four functions, with push-button on/off control	66226	-	-	-	-	-	-	162, 653
ORIGINI	Wall-mounted washbasin mixer rough valve	66236	-	-	-	-	-	-	155
ORIGINI	TRIM PARTS ONLY External parts for individual thermostatic mixer	66316	-	-	-	-	-	-	168
ORIGINI HABITO	Wall-mounted soap dish, white	66401	-	-	-	-	-	-	178, 506
ORIGINI HABITO	Wall-mounted soap dish, black	66402	-	-	-	-	-	-	178, 506
ORIGINI HABITO	Wall-mounted holder, white	66407	-	-	-	-	-	-	178, 506
ORIGINI HABITO	Wall-mounted holder, black	66408	-	-	-	-	-	-	178, 506
ORIGINI HABITO	Wall-mounted liquid soap dispenser , white	66413	-	-	-	-	-	-	179, 507
ORIGINI HABITO	Wall-mounted liquid soap dispenser - black	66414	-	-	-	-	-	-	179, 507
ORIGINI HABITO	Wall-mounted brush holder, white	66419	-	-	-	-	-	-	179, 507
ORIGINI HABITO	Wall-mounted brush holder, black	66420	-	-	-	-	-	-	179, 507
VENTAGLIO ORIGINI ANELLO INGRANAGGIO HABITO	Standing soap dispenser holder, white	66437	-	-	-	-	-	-	129, 181, 389, 429, 509
VENTAGLIO ORIGINI ANELLO INGRANAGGIO HABITO	Standing soap dispenser holder, black	66438	-	-	-	-	-	-	129, 181, 389, 429, 509
ORIGINI HABITO	Horizontal/Vertical paper-roll holder	66455	-	-	-	-	-	-	182, 510
ORIGINI HABITO	12” Towel rail	66500	-	-	-	-	-	-	182, 510
ORIGINI HABITO	18” Towel rail	66502	-	-	-	-	-	-	182, 510
ORIGINI HABITO	24” Towel rail	66504	-	-	-	-	-	-	182, 510
ORIGINI HABITO	12” Towel rail for glass fixing	66511	-	-	-	-	-	-	183, 512
ORIGINI HABITO	18” Towel rail for glass fixing	66513	-	-	-	-	-	-	183, 512
ORIGINI HABITO	24” Towel rail for glass fixing	66515	-	-	-	-	-	-	184, 513
ORIGINI	Wall-mounted hanger. Finishing insert included. Can be combined with different finishes with insert 66600 or insert ART 66602	66521	-	-	-	-	-	-	183
ORIGINI HABITO	Wall mounted garment hook, UNITO	66523	-	-	-	-	-	-	183, 511
ORIGINI HI-FI	Insert	66600	-	-	-	-	-	-	152, 185, 653
ORIGINI TOTAL LOOK	Countertop washbasin in Cristalplant®, without overflow drain. Basin waste 01313 not included	66601	CSA	-	-	-	-	MASS	188, 772
ORIGINI HI-FI	Insert ART	66602	-	-	-	-	-	-	152, 185, 653
ORIGINI HI-FI	Kit 5 Insert	66604	-	-	-	-	-	-	152, 654
ORIGINI HI-FI	Kit 5 Insert ART	66605	-	-	-	-	-	-	152, 654
SHOWER G	TRIM PARTS ONLY 24” linear drain insert to be combined with cover art. 67066, 67566, or 67666 purchased separately	67054	-	-	-	-	-	-	758
SHOWER G	TRIM PARTS ONLY 32” linear drain insert to be combined with cover art. 67066, 67566, or 67666 purchased separately	67056	-	-	-	-	-	-	758
SHOWER G	TRIM PARTS ONLY 36” linear drain insert to be combined with cover art. 67066, 67566, or 67666 purchased separately	67058	-	-	-	-	-	-	758
SHOWER G	TRIM PARTS ONLY 42” linear drain insert to be combined with cover art. 67066, 67566, or 67666 purchased separately	67060	-	-	-	-	-	-	758
SHOWER G	TRIM PARTS ONLY 48” linear drain insert to be combined with cover art. 67066, 67566, or 67666 purchased separately	67062	-	-	-	-	-	-	759
SHOWER G	TRIM PARTS ONLY 60” linear drain insert to be combined with cover art. 67066, 67566, or 67666 purchased separately	67064	-	-	-	-	-	-	759

SERIES	DESCRIPTIONS	CODE	CSA	CEC	DOE	CALGREEN	EPA WATERSENSE	MASSA-CHUSSETS	PAGE
SHOWER G	Cover for INFINITY DRAIN UNITO L 6-5/16”	67066	-	-	-	-	-	-	760
SHOWER G	Wall-Glass self-centering hinge. RIGATO. If the door exceeds 110 lbs or 39-3/8” width, the use of 3 hinges is recommended.	67501	-	-	-	-	-	-	743
SHOWER G	Glass-Glass self-centering hinge. RIGATO. If the door exceeds 110 lbs or 39-3/8” width, the use of 3 hinges is recommended.	67503	-	-	-	-	-	-	743
SHOWER G	Wall-Glass clamp. RIGATO	67505	-	-	-	-	-	-	743
SHOWER G	Wall-Glass clamp. RIGATO	67506	-	-	-	-	-	-	744
SHOWER G	Angular Glass-Glass clamp. RIGATO	67507	-	-	-	-	-	-	743
SHOWER G	8” Handle. Vertical/horizontal installation. RIGATO	67521	-	-	-	-	-	-	750
SHOWER G	12” Handle. Vertical/horizontal installation. RIGATO	67523	-	-	-	-	-	-	750
SHOWER G	18” Handle. Vertical/horizontal installation. RIGATO	67525	-	-	-	-	-	-	750
SHOWER G	24” Handle. Vertical/horizontal installation. RIGATO	67527	-	-	-	-	-	-	750
SHOWER G	8” Double handle. Vertical/horizontal installation. RIGATO	67531	-	-	-	-	-	-	751
SHOWER G	12” Double handle. Vertical/horizontal installation. RIGATO	67533	-	-	-	-	-	-	751
SHOWER G	18” Double handle. Vertical/horizontal installation. RIGATO	67535	-	-	-	-	-	-	751
SHOWER G	24” Double handle. Vertical/horizontal installation. RIGATO	67537	-	-	-	-	-	-	751
SHOWER G	12” towel rail. RIGATO	67541	-	-	-	-	-	-	752
SHOWER G	12” Handle and towel rail RIGATO	67542	-	-	-	-	-	-	752
SHOWER G	18” towel rail. RIGATO	67543	-	-	-	-	-	-	752
SHOWER G	18” Handle and towel rail RIGATO	67544	-	-	-	-	-	-	753
SHOWER G	24” towel rail. RIGATO	67545	-	-	-	-	-	-	752
SHOWER G	24” Handle and towel rail RIGATO	67546	-	-	-	-	-	-	753
SHOWER G	Cover for INFINITY DRAIN RIGATO L 6-5/16”	67566	-	-	-	-	-	-	759
SHOWER G	Stabilization arm for frameless shower enclosure. RIGATO	67571	-	-	-	-	-	-	744
SHOWER G	Stabilization arm for frameless shower enclosure. Customizable length. RIGATO	67573	-	-	-	-	-	-	744
SHOWER G	T-shaped stabilization arm for frameless shower enclosure. Customizable length. RIGATO	67575	-	-	-	-	-	-	744
SHOWER G	Wall-Glass self-centering hinge. DIAMANTATO. If the door exceeds 110 lbs or 39-3/8” width, the use of 3 hinges is recommended.	67601	-	-	-	-	-	-	746
SHOWER G	Glass-Glass self-centering hinge. DIAMANTATO.If the door exceeds 110 lbs or 39-3/8” width, the use of 3 hinges is recommended.	67603	-	-	-	-	-	-	746
SHOWER G	Wall-Glass clamp. DIAMANTATO	67605	-	-	-	-	-	-	746
SHOWER G	Wall-Glass clamp. DIAMANTATO	67606	-	-	-	-	-	-	747
SHOWER G	Angular Glass-Glass clamp. DIAMANTATO	67607	-	-	-	-	-	-	746
SHOWER G	8” Handle. Vertical/horizontal installation. DIAMANTATO	67621	-	-	-	-	-	-	753
SHOWER G	12” Handle. Vertical/horizontal installation. DIAMANTATO	67623	-	-	-	-	-	-	753
SHOWER G	18” Handle. Vertical/horizontal installation. DIAMANTATO	67625	-	-	-	-	-	-	754
SHOWER G	24” Handle. Vertical/horizontal installation. DIAMANTATO	67627	-	-	-	-	-	-	754
SHOWER G	8” Double handle. Vertical/horizontal installation. DIAMANTATO	67631	-	-	-	-	-	-	754
SHOWER G	12” Double handle. Vertical/horizontal installation. DIAMANTATO	67633	-	-	-	-	-	-	754
SHOWER G	18” Double handle. Vertical/horizontal installation. DIAMANTATO	67635	-	-	-	-	-	-	755
SHOWER G	24” Double handle. Vertical/horizontal installation. DIAMANTATO	67637	-	-	-	-	-	-	755
SHOWER G	12” towel rail. DIAMANTATO	67641	-	-	-	-	-	-	755
SHOWER G	12” Handle and towel rail DIAMANTATO	67642	-	-	-	-	-	-	756
SHOWER G	18” towel rail. DIAMANTATO	67643	-	-	-	-	-	-	755
SHOWER G	18” Handle and towel rail DIAMANTATO	67644	-	-	-	-	-	-	756
SHOWER G	24” towel rail. DIAMANTATO	67645	-	-	-	-	-	-	756
SHOWER G	24” Handle and towel rail DIAMANTATO	67646	-	-	-	-	-	-	756
SHOWER G	Cover for INFINITY DRAIN DIAMANTATO L 6-5/16”	67666	-	-	-	-	-	-	759
SHOWER G	Stabilization arm for frameless shower enclosure. DIAMANTATO	67671	-	-	-	-	-	-	747
SHOWER G	Stabilization arm for frameless shower enclosure. Customizable length. DIAMANTATO.	67673	-	-	-	-	-	-	747
SHOWER G	T-shaped stabilization arm for frameless shower enclosure. Customizable length. DIAMANTATO	67675	-	-	-	-	-	-	747
HOME VASES	Vase INTRECCIO 4” diameter, 11-15/16”H	68115	-	-	-	-	-	-	798, 800
HOME VASES	Vase INTRECCIO 4” diameter, 14-3/4”H	68117	-	-	-	-	-	-	798, 800
HOME VASES	Vase INTRECCIO 4” diameter, 17-1/2”H	68119	-	-	-	-	-	-	799, 800
HOME VASES	Vase INTRECCIO 6-5/8” diameter, 11-15/16”H	68121	-	-	-	-	-	-	799, 800
HOME VASES	Vase INTRECCIO 6-5/8” diameter, 15-7/8” H	68123	-	-	-	-	-	-	799, 801

GESSI

SERIES	DESCRIPTIONS	CODE	CSA	CEC	DOE	CALGREEN	EPA WATERSENSE	MASSA-CHUSSETS	PAGE
HOME VASES	Vase INTRECCIO 6-5/8” diameter, 19-13/16”H	68125	-	-	-	-	-	-	799, 801
HOME VASES	Vase MECCANICA 4” diameter, 11-15/16”H	68215	-	-	-	-	-	-	801
HOME VASES	Vase MECCANICA 4” diameter, 14-3/4”H	68217	-	-	-	-	-	-	801
HOME VASES	Vase MECCANICA 4” diameter, 17-1/2”H	68219	-	-	-	-	-	-	802
HOME VASES	Vase MECCANICA 6-5/8” diameter, 11-15/16”H	68221	-	-	-	-	-	-	802
HOME VASES	Vase MECCANICA 6-5/8” diameter, 15-7/8”H	68223	-	-	-	-	-	-	802
HOME VASES	Vase MECCANICA 6-5/8” diameter, 19-13/16”H	68225	-	-	-	-	-	-	802
HOME VASES	Vase TRAME 4” diameter, 11-15/16”H	68315	-	-	-	-	-	-	797
HOME VASES	Vase TRAME 4” diameter, 14-3/4”H	68317	-	-	-	-	-	-	797
HOME VASES	Vase TRAME 4” diameter, 17-1/2”H	68319	-	-	-	-	-	-	797
HOME VASES	Vase TRAME 6-5/8” diameter, 11-15/16”H	68321	-	-	-	-	-	-	797
HOME VASES	Vase TRAME 6-5/8” diameter, 15-7/8” H	68323	-	-	-	-	-	-	798
HOME VASES	Vase TRAME 6-5/8” diameter, 19-13/16”H	68325	-	-	-	-	-	-	798
HOME VASES	Vase CESELLO 4” diameter, 11-15/16”H	68415	-	-	-	-	-	-	803
HOME VASES	Vase CESELLO 4” diameter, 14-3/4”H	68417	-	-	-	-	-	-	803
HOME VASES	Vase CESELLO 4” diameter, 17-1/2”H	68419	-	-	-	-	-	-	803
HOME VASES	Vase CESELLO 6-5/8” diameter, 11-15/16”H	68421	-	-	-	-	-	-	803
HOME VASES	Vase CESELLO 6-5/8” diameter, 15-7/8”H	68423	-	-	-	-	-	-	804
HOME VASES	Vase CESELLO 6-5/8” diameter, 19-13/16”H	68425	-	-	-	-	-	-	804
HOME VASES	Vase RIGATO 4” diameter, 11-15/16”H	68515	-	-	-	-	-	-	794
HOME VASES	Vase RIGATO 4” diameter, 14-3/4”H	68517	-	-	-	-	-	-	794
HOME VASES	Vase RIGATO 4” diameter, 17-1/2”H	68519	-	-	-	-	-	-	794
HOME VASES	Vase RIGATO 6-5/8” diameter, 11-15/16”H	68521	-	-	-	-	-	-	794
HOME VASES	Vase RIGATO 6-5/8” diameter, 15-7/8” H	68523	-	-	-	-	-	-	795
HOME VASES	Vase RIGATO 6-5/8” diameter, 19-13/16”H	68525	-	-	-	-	-	-	795
HOME VASES	Vase DIAMANTATO 4” diameter, 11-13/16”H	68615	-	-	-	-	-	-	795
HOME VASES	Vase DIAMANTATO 4” diameter, 14-3/4”H	68617	-	-	-	-	-	-	795
HOME VASES	Vase DIAMANTATO 4” diameter, 17-1/2”H	68619	-	-	-	-	-	-	796
HOME VASES	Vase DIAMANTATO 6-5/8” diameter, 11-15/16”H	68621	-	-	-	-	-	-	796
HOME VASES	Vase DIAMANTATO 6-5/8” diameter, 15-7/8” H	68623	-	-	-	-	-	-	796
HOME VASES	Vase DIAMANTATO 6-5/8” diameter, 19-13/16”H	68625	-	-	-	-	-	-	796
HOME VASES	Decorative Vase Presentation Case. INTRECCIO	68730	-	-	-	-	-	-	804
HOME VASES	Decorative Vase Presentation Case. MECCANICA	68732	-	-	-	-	-	-	804
HOME VASES	Decorative Vase Presentation Case. TRAME	68734	-	-	-	-	-	-	805
HOME VASES	Decorative Vase Presentation Case. CESELLO	68736	-	-	-	-	-	-	805
HOME VASES	Decorative Vase Presentation Case. RIGATO	68738	-	-	-	-	-	-	805
HOME VASES	Decorative Vase Presentation Case. DIAMANTATO	68740	-	-	-	-	-	-	805
HABITO	Single lever washbasin mixer with pop-up assembly. UNITO	70001	CSA	CEC	DOE	CAL	-	MASS	442
HABITO	Single lever washbasin mixer without pop-up assembly. UNITO	70002	CSA	CEC	DOE	CAL	-	MASS	442
HABITO	Tall single lever washbasin mixer with pop-up assembly. UNITO	70003	CSA	CEC	DOE	CAL	-	MASS	443
HABITO	Tall single lever washbasin mixer without pop-up assembly. UNITO	70004	CSA	CEC	DOE	CAL	-	MASS	443
HABITO	Medium single lever washbasin mixer with pop-up assembly. UNITO	70005	CSA	CEC	DOE	CAL	-	MASS	442
HABITO	Medium single lever washbasin mixer without pop-up assembly. UNITO	70006	CSA	CEC	DOE	CAL	-	MASS	442
HABITO	TRIM PARTS ONLY Floor-mounted tub filler UNITO	70028	-	-	-	-	-	-	446
HABITO	TRIM PARTS ONLY. Wall-mounted bath mixer control. UNITO	70038	-	-	-	-	-	-	447
VENTAGLIO HABITO HANDSHOWER SETS HANDSHOWER SETS	Handshower and adjustable sliding rail set. UNITO	70042	CSA	CEC	DOE	-	-	MASS	120, 447, 733, 734
HABITO	TRIM PARTS ONLY Wall-mounted washbasin mixer trim. UNITO	70088	-	-	-	-	-	-	443
HABITO	TRIM PARTS ONLY Wall-mounted washbasin mixer control UNITO	70099	-	-	-	-	-	-	445
HABITO	Single lever washbasin mixer with pop-up assembly. INTRECCIO	70101	CSA	CEC	DOE	CAL	-	MASS	458
HABITO	Single lever washbasin mixer without pop-up assembly. INTRECCIO	70102	CSA	CEC	DOE	CAL	-	MASS	458
HABITO	Tall single lever washbasin mixer with pop-up assembly. INTRECCIO	70103	CSA	CEC	DOE	CAL	-	MASS	459
HABITO	Tall single lever washbasin mixer without pop-up assembly. INTRECCIO	70104	CSA	CEC	DOE	CAL	-	MASS	459
HABITO	Medium single lever washbasin mixer with pop-up assembly. INTRECCIO	70105	CSA	CEC	DOE	CAL	-	MASS	458
HABITO	Medium single lever washbasin mixer without pop-up assembly. INTRECCIO	70106	CSA	CEC	DOE	CAL	-	MASS	458

GESSI

SERIES	DESCRIPTIONS	CODE	CSA	CEC	DOE	CALGREEN	EPA WATERSENSE	MASSA-CHUSSETS	PAGE
HABITO	Wall mounted garment hook, INTRECCIO	70123	-	-	-	-	-	-	511
HABITO	TRIM PARTS ONLY Floor-mounted tub filler INTRECCIO	70128	-	-	-	-	-	-	462
HABITO	TRIM PARTS ONLY. Wall-mounted bath mixer control. INTRECCIO	70138	-	-	-	-	-	-	463
HABITO HANDSHOWER SETS	Handshower and adjustable sliding rail set. INTRECCIO	70142	CSA	CEC	DOE	-	-	MASS	463, 734
HABITO	TRIM PARTS ONLY Wall-mounted washbasin mixer trim. INTRECCIO	70188	-	-	-	-	-	-	459
HABITO	TRIM PARTS ONLY Wall-mounted washbasin mixer control INTRECCIO	70199	-	-	-	-	-	-	461
OUTDOOR	HABITO Lever/handshower kit for 63204	70216	CSA	CEC	DOE	-	-	MASS	766
HABITO	Single lever washbasin mixer with pop-up assembly. TRAME	70301	CSA	CEC	DOE	CAL	-	MASS	450
HABITO	Single lever washbasin mixer without pop-up assembly. TRAME	70302	CSA	CEC	DOE	CAL	-	MASS	450
HABITO	Tall single lever washbasin mixer with pop-up assembly. TRAME	70303	CSA	CEC	DOE	CAL	-	MASS	451
HABITO	Tall single lever washbasin mixer without pop-up assembly. TRAME	70304	CSA	CEC	DOE	CAL	-	MASS	451
HABITO	Medium single lever washbasin mixer with pop-up assembly. TRAME	70305	CSA	CEC	DOE	CAL	-	MASS	450
HABITO	Medium single lever washbasin mixer without pop-up assembly. TRAME	70306	CSA	CEC	DOE	CAL	-	MASS	450
HABITO	Wall mounted garment hook, TRAME	70323	-	-	-	-	-	-	511
HABITO	TRIM PARTS ONLY Floor-mounted tub filler TRAME	70328	-	-	-	-	-	-	454
HABITO	TRIM PARTS ONLY. Wall-mounted bath mixer control. TRAME	70338	-	-	-	-	-	-	455
HABITO HANDSHOWER SETS	Handshower and adjustable sliding rail set. TRAME	70342	CSA	CEC	DOE	-	-	MASS	455, 733
HABITO	TRIM PARTS ONLY Wall-mounted washbasin mixer trim. TRAME	70388	-	-	-	-	-	-	451
HABITO	TRIM PARTS ONLY Wall-mounted washbasin mixer control TRAME	70399	-	-	-	-	-	-	453
HABITO	Single lever washbasin mixer with pop-up assembly. CESELLO	70401	CSA	CEC	DOE	CAL	-	MASS	482
HABITO	Single lever washbasin mixer without pop-up assembly. CESELLO	70402	CSA	CEC	DOE	CAL	-	MASS	482
HABITO	Tall single lever washbasin mixer with pop-up assembly. CESELLO	70403	CSA	CEC	DOE	CAL	-	MASS	483
HABITO	Tall single lever washbasin mixer without pop-up assembly. CESELLO	70404	CSA	CEC	DOE	CAL	-	MASS	483
HABITO	Medium single lever washbasin mixer with pop-up assembly. CESELLO	70405	CSA	CEC	DOE	CAL	-	MASS	482
HABITO	Medium single lever washbasin mixer without pop-up assembly. CESELLO	70406	CSA	CEC	DOE	CAL	-	MASS	482
HABITO	Wall mounted garment hook, CESELLO	70423	-	-	-	-	-	-	512
HABITO	TRIM PARTS ONLY Floor-mounted tub filler CESELLO	70428	-	-	-	-	-	-	486
HABITO	TRIM PARTS ONLY. Wall-mounted bath mixer control. CESELLO	70438	-	-	-	-	-	-	487
HABITO HANDSHOWER SETS	Handshower and adjustable sliding rail set. CESELLO	70442	CSA	CEC	DOE	-	-	MASS	487, 734
HABITO	TRIM PARTS ONLY Wall-mounted washbasin mixer trim. CESELLO	70488	-	-	-	-	-	-	483
HABITO	TRIM PARTS ONLY Wall-mounted washbasin mixer control CESELLO	70499	-	-	-	-	-	-	485
HABITO	Single lever washbasin mixer with pop-up assembly. RIGATO	70501	CSA	CEC	DOE	CAL	-	MASS	466
HABITO	Single lever washbasin mixer without pop-up assembly. RIGATO	70502	CSA	CEC	DOE	CAL	-	MASS	466
HABITO	Tall single lever washbasin mixer with pop-up assembly. RIGATO	70503	CSA	CEC	DOE	CAL	-	MASS	467
HABITO	Tall single lever washbasin mixer without pop-up assembly. RIGATO	70504	CSA	CEC	DOE	CAL	-	MASS	467
HABITO	Medium single lever washbasin mixer with pop-up assembly. RIGATO	70505	CSA	CEC	DOE	CAL	-	MASS	466
HABITO	Medium single lever washbasin mixer without pop-up assembly. RIGATO	70506	CSA	CEC	DOE	CAL	-	MASS	466
HABITO	Wall mounted garment hook, RIGATO	70523	-	-	-	-	-	-	511
HABITO	TRIM PARTS ONLY Floor-mounted tub filler RIGATO	70528	-	-	-	-	-	-	470
HABITO	TRIM PARTS ONLY. Wall-mounted bath mixer control. RIGATO	70538	-	-	-	-	-	-	471
HABITO	TRIM PARTS ONLY Wall-mounted washbasin mixer trim. RIGATO	70588	-	-	-	-	-	-	467
HABITO	TRIM PARTS ONLY Wall-mounted washbasin mixer control RIGATO	70599	-	-	-	-	-	-	469
HABITO	Single lever washbasin mixer with pop-up assembly. DIAMANTATO	70601	CSA	CEC	DOE	CAL	-	MASS	474
HABITO	Single lever washbasin mixer without pop-up assembly. DIAMANTATO	70602	CSA	CEC	DOE	CAL	-	MASS	474
HABITO	Tall single lever washbasin mixer with pop-up assembly. DIAMANTATO	70603	CSA	CEC	DOE	CAL	-	MASS	475
HABITO	Tall single lever washbasin mixer without pop-up assembly. DIAMANTATO	70604	CSA	CEC	DOE	CAL	-	MASS	475
HABITO	Medium single lever washbasin mixer with pop-up assembly. DIAMANTATO	70605	CSA	CEC	DOE	CAL	-	MASS	474
HABITO	Medium single lever washbasin mixer without pop-up assembly. DIAMANTATO	70606	CSA	CEC	DOE	CAL	-	MASS	474
HABITO	Wall mounted garment hook, DIAMANTATO	70623	-	-	-	-	-	-	512
HABITO	TRIM PARTS ONLY Floor-mounted tub filler DIAMANTATO	70628	-	-	-	-	-	-	478
HABITO	TRIM PARTS ONLY. Wall-mounted bath mixer control. DIAMANTATO	70638	-	-	-	-	-	-	479
HABITO	TRIM PARTS ONLY Wall-mounted washbasin mixer trim. DIAMANTATO	70688	-	-	-	-	-	-	475
HABITO	TRIM PARTS ONLY Wall-mounted washbasin mixer control DIAMANTATO	70699	-	-	-	-	-	-	477
HANDSHOWER SETS EMPORIO SHOWER	Handshower and adjustable sliding rail set	71442	CSA	CEC	DOE	-	-	MASS	737, 824

GESSI

SERIES	DESCRIPTIONS	CODE	CSA	CEC	DOE	CALGREEN	EPA WATERSENSE	MASSA-CHUSSETS	PAGE
VENTAGLIO	Single lever washbasin mixer without Stop&Go assembly	72002	-	-	-	-	-	-	104
VENTAGLIO	Medium single lever washbasin without Stop&Go assembly	72004	-	-	-	-	-	-	104
VENTAGLIO	Widespread washbasin mixer without pop-up assembly	72013	-	-	-	-	-	-	105
VENTAGLIO	Widespread washbasin mixer without pop-up assembly	72014	-	-	-	-	-	-	105
VENTAGLIO	TRIM PARTS ONLY Floor-mounted tub filler	72028	-	-	-	-	-	-	108
VENTAGLIO	TRIM PARTS ONLY Wall-mounted bath mixer control	72036	-	-	-	-	-	-	109
VENTAGLIO	Single lever washbasin mixer with Stop&Go assembly	72051	-	-	-	-	-	-	104
VENTAGLIO	Medium single lever washbasin with Stop&Go assembly	72053	-	-	-	-	-	-	104
VENTAGLIO	TRIM PARTS ONLY Wall-mounted washbasin mixer trim	72088	-	-	-	-	-	-	105
VENTAGLIO	Wall-mounted washbasin spout only	72102	-	-	-	-	-	-	106
VENTAGLIO	Wall-mounted bath spout only	72103	-	-	-	-	-	-	108
VENTAGLIO	External part wall-mounted one-way basin mixer	72109	-	-	-	-	-	-	107
VENTAGLIO	TRIM PARTS ONLY External parts for single exit pressure balance	72172	-	-	-	-	-	-	114
VENTAGLIO	TRIM PARTS ONLY External parts for pressure balance with two ways diverter	72174	-	-	-	-	-	-	114
VENTAGLIO	Wall-mounted robe hook.	72521	-	-	-	-	-	-	131
INVERSO	Fixing handshower hook.	73057	-	-	-	-	-	-	85
INVERSO	Wall elbow with built-in water intake and fixed hook	73061	-	-	-	-	-	-	84
INVERSO	Wall elbow with backplate	73069	-	-	-	-	-	-	84
INVERSO	Wall-mounted washbasin spout only	73102	-	-	-	-	-	-	54, 66
INVERSO	Wall-mounted bath spout only	73103	-	-	-	-	-	-	57, 69
INVERSO	Wall-mounted washbasin spout only	73104	-	-	-	-	-	-	54, 66
INVERSO	Single lever washbasin mixer without Stop&Go assembly. RIGATO	73502	-	-	-	-	-	-	52
INVERSO	Tall single lever washbasin without Stop&Go assembly. RIGATO	73504	-	-	-	-	-	-	53
INVERSO	Medium single lever washbasin without Stop&Go assembly. RIGATO	73506	-	-	-	-	-	-	52
INVERSO	TRIM PARTS ONLY Wall-mounted washbasin mixer control. RIGATO	73509	-	-	-	-	-	-	56
INVERSO	Widespread washbasin mixer without pop-up assembly. RIGATO	73513	-	-	-	-	-	-	53
INVERSO	Widespread washbasin mixer without pop-up assembly. RIGATO	73514	-	-	-	-	-	-	53
INVERSO	Wall-mounted robe hook. RIGATO.	73521	-	-	-	-	-	-	95
INVERSO	Handshower set	73523	-	-	-	-	-	-	84
INVERSO	TRIM PARTS ONLY Floor-mounted tub filler. RIGATO	73528	-	-	-	-	-	-	57
INVERSO HABITO	TRIM PARTS ONLY External parts for thermostatic with single volume control. RIGATO	73533	-	-	-	-	-	-	58, 490
INVERSO HABITO	TRIM PARTS ONLY External parts for two ways diverter thermostatic and volume control. RIGATO	73535	-	-	-	-	-	-	59, 491
INVERSO	TRIM PARTS ONLY Wall-mounted bath mixer control. RIGATO	73536	-	-	-	-	-	-	58
INVERSO HABITO	TRIM PARTS ONLY External parts for three ways diverter thermostatic and volume control. RIGATO	73537	-	-	-	-	-	-	59, 492
INVERSO HANDSHOWER SETS	Handshower and adjustable sliding rail set. RIGATO	73541	-	-	-	-	-	-	61, 733
INVERSO	Single lever washbasin mixer with Stop&Go assembly. RIGATO	73551	-	-	-	-	-	-	52
INVERSO	Tall single lever washbasin with Stop&Go assembly. RIGATO	73553	-	-	-	-	-	-	53
INVERSO	Medium single lever washbasin with Stop&Go assembly. RIGATO	73555	-	-	-	-	-	-	52
INVERSO	TRIM PARTS ONLY External parts for single exit pressure balance. RIGATO	73572	-	-	-	-	-	-	60
INVERSO	TRIM PARTS ONLY External parts for pressure balance with 2 ways diverter. RIGATO	73574	-	-	-	-	-	-	60
INVERSO	TRIM PARTS ONLY Wall-mounted washbasin mixer trim. RIGATO	73588	-	-	-	-	-	-	54
INVERSO	Single lever washbasin mixer without Stop&Go assembly. DIAMANTATO	73602	-	-	-	-	-	-	64
INVERSO	Tall single lever washbasin without Stop&Go assembly. DIAMANTATO	73604	-	-	-	-	-	-	65
INVERSO	Medium single lever washbasin without Stop&Go assembly. DIAMANTATO	73606	-	-	-	-	-	-	64
INVERSO	TRIM PARTS ONLY Wall-mounted washbasin mixer control. DIAMANTATO	73609	-	-	-	-	-	-	68
INVERSO	Widespread washbasin mixer without pop-up assembly. DIAMANTATO	73613	-	-	-	-	-	-	65
INVERSO	Widespread washbasin mixer without pop-up assembly. DIAMANTATO	73614	-	-	-	-	-	-	65
INVERSO	Wall-mounted robe hook. DIAMANTATO.	73621	-	-	-	-	-	-	95
INVERSO	TRIM PARTS ONLY Floor-mounted tub filler. DIAMANTATO	73628	-	-	-	-	-	-	69
INVERSO HABITO	TRIM PARTS ONLY External parts for thermostatic with single volume control. DIAMANTATO	73633	-	-	-	-	-	-	70, 491
INVERSO HABITO	TRIM PARTS ONLY External parts for two ways diverter thermostatic and volume control. DIAMANTATO	73635	-	-	-	-	-	-	71, 492
INVERSO	TRIM PARTS ONLY Wall-mounted bath mixer control. DIAMANTATO	73636	-	-	-	-	-	-	70

GESSI

SERIES	DESCRIPTIONS	CODE	CSA	CEC	DOE	CALGREEN	EPA WATERSENSE	MASSA-CHUSSETS	PAGE
INVERSO HABITO	TRIM PARTS ONLY External parts for three ways diverter thermostatic and volume control. DIAMANTATO	73637	-	-	-	-	-	-	71, 493
INVERSO HANDSHOWER SETS	Handshower and adjustable sliding rail set. DIAMANTATO	73641	-	-	-	-	-	-	73, 733
INVERSO	Single lever washbasin mixer with Stop&Go assembly. DIAMANTATO	73651	-	-	-	-	-	-	64
INVERSO	Tall single lever washbasin with Stop&Go assembly. DIAMANTATO	73653	-	-	-	-	-	-	65
INVERSO	Medium single lever washbasin with Stop&Go assembly. DIAMANTATO	73655	-	-	-	-	-	-	64
INVERSO	TRIM PARTS ONLY External parts for single exit pressure balance. DIAMANTATO	73672	-	-	-	-	-	-	72
INVERSO	TRIM PARTS ONLY External parts for pressure balance with 2 ways diverter. DIAMANTATO	73674	-	-	-	-	-	-	72
INVERSO	TRIM PARTS ONLY Wall-mounted washbasin mixer trim. DIAMANTATO	73688	-	-	-	-	-	-	66
TECHNICAL ACCESSORIES	0 - 1" height extension	RI09298	-	-	-	-	-	-	843
TECHNICAL ACCESSORIES	1" - 2" height extension	RI09299	-	-	-	-	-	-	843
TECHNICAL ACCESSORIES	0 - 1" height extension	RI29535	-	-	-	-	-	-	841
TECHNICAL ACCESSORIES	1" - 2" height extension	RI29536	-	-	-	-	-	-	841
TECHNICAL ACCESSORIES	0 - 1" height extension	RI29543	-	-	-	-	-	-	842
TECHNICAL ACCESSORIES	1" - 2" height extension	RI29544	-	-	-	-	-	-	842
TECHNICAL ACCESSORIES	0 - 1" height extension	RI43120	-	-	-	-	-	-	845
TECHNICAL ACCESSORIES	0 - 1" height extension	RI43121	-	-	-	-	-	-	845
TECHNICAL ACCESSORIES	0 - 1" height extension	RI43122	-	-	-	-	-	-	846
TECHNICAL ACCESSORIES	0 - 1" height extension	RI43123	-	-	-	-	-	-	847
TECHNICAL ACCESSORIES	0 - 1" height extension	RI43124	-	-	-	-	-	-	848
TECHNICAL ACCESSORIES	0 - 1" height extension	RI43125	-	-	-	-	-	-	848
TECHNICAL ACCESSORIES	0 - 1" height extension	RI43128	-	-	-	-	-	-	849
TECHNICAL ACCESSORIES	0 - 1" height extension	RI43129	-	-	-	-	-	-	850
TECHNICAL ACCESSORIES	0 - 1" height extension	RI43132	-	-	-	-	-	-	844
TECHNICAL ACCESSORIES	0 - 1" height extension	RI43134	-	-	-	-	-	-	844
TECHNICAL ACCESSORIES	1" - 2" height extension	RI43140	-	-	-	-	-	-	845
TECHNICAL ACCESSORIES	1" - 2" height extension	RI43141	-	-	-	-	-	-	845
TECHNICAL ACCESSORIES	1" - 2" height extension	RI43142	-	-	-	-	-	-	846
TECHNICAL ACCESSORIES	1" - 2" height extension	RI43143	-	-	-	-	-	-	847
TECHNICAL ACCESSORIES	1" - 2" height extension	RI43144	-	-	-	-	-	-	848
TECHNICAL ACCESSORIES	1" - 2" height extension	RI43145	-	-	-	-	-	-	848
TECHNICAL ACCESSORIES	1" - 2" height extension	RI43148	-	-	-	-	-	-	849
TECHNICAL ACCESSORIES	1" - 2" height extension	RI43149	-	-	-	-	-	-	850
TECHNICAL ACCESSORIES	1" - 2" height extension	RI43150	-	-	-	-	-	-	843
TECHNICAL ACCESSORIES	1" - 2" height extension	RI43152	-	-	-	-	-	-	844
TECHNICAL ACCESSORIES	1" - 2" height extension	RI43154	-	-	-	-	-	-	844
TECHNICAL ACCESSORIES	0-1/2" height extension	RIR3153	-	-	-	-	-	-	842
TECHNICAL ACCESSORIES	1/2"-1" height extension	RIR3154	-	-	-	-	-	-	842
TECHNICAL ACCESSORIES	0 - 1" height extension	RIR4192	-	-	-	-	-	-	853
TECHNICAL ACCESSORIES	1" - 2" height extension	RIR4193	-	-	-	-	-	-	853

GESSI

SERIES	DESCRIPTIONS	CODE	CSA	CEC	DOE	CALGREEN	EPA WATERSENSE	MASSA-CHUSSETS	PAGE
TECHNICAL ACCESSORIES	0 - 1" height extension	RIR4335	-	-	-	-	-	-	854
TECHNICAL ACCESSORIES	1" - 2" height extension	RIR4336	-	-	-	-	-	-	854
TECHNICAL ACCESSORIES	0 - 1" height extension	RIR4452	-	-	-	-	-	-	855
TECHNICAL ACCESSORIES	1" - 2" height extension	RIR4453	-	-	-	-	-	-	855
TECHNICAL ACCESSORIES	0 - 1" height extension	RIR4475	-	-	-	-	-	-	840
TECHNICAL ACCESSORIES	1" - 2" height extension	RIR4476	-	-	-	-	-	-	840
AFILO COLOUR	Optional kit PIR motion sensor with IP connector for automatic chromotherapy function activation.	RIR5403	-	-	-	-	-	-	680, 701
AFILO MINIMALI COLOUR	Kit 1/2"NPT f – 1/2"NPT m - 1.75 GPM for Shower System	RIR5404	-	-	-	-	-	-	681, 693, 702
TECHNICAL ACCESSORIES	0 - 1" height extension	SP01492	-	-	-	-	-	-	857
TECHNICAL ACCESSORIES	0 - 1" height extension	SP01494	-	-	-	-	-	-	856
TECHNICAL ACCESSORIES	0 - 1" height extension	SP01498	-	-	-	-	-	-	856
TECHNICAL ACCESSORIES	1" - 2" height extension	SP01499	-	-	-	-	-	-	856
TECHNICAL ACCESSORIES	0 - 1" height extension	SP01500	-	-	-	-	-	-	856
TECHNICAL ACCESSORIES	0 - 1" height extension	SP01503	-	-	-	-	-	-	854
TECHNICAL ACCESSORIES	1" - 2" height extension	SP01504	-	-	-	-	-	-	854
TECHNICAL ACCESSORIES	0 - 1" height extension	SP01505	-	-	-	-	-	-	847
TECHNICAL ACCESSORIES	1" - 2" height extension	SP01506	-	-	-	-	-	-	847
TECHNICAL ACCESSORIES	0 - 1" height extension	SP01507	-	-	-	-	-	-	849
TECHNICAL ACCESSORIES	1" - 2" height extension	SP01508	-	-	-	-	-	-	849
TECHNICAL ACCESSORIES	0 - 1" height extension	SP01511	-	-	-	-	-	-	851
TECHNICAL ACCESSORIES	1" - 2" height extension	SP01512	-	-	-	-	-	-	851
TECHNICAL ACCESSORIES	0 - 1" height extension	SP01517	-	-	-	-	-	-	846
TECHNICAL ACCESSORIES	1" - 2" height extension	SP01518	-	-	-	-	-	-	846
TECHNICAL ACCESSORIES	0 - 1" height extension	SP01519	-	-	-	-	-	-	850
TECHNICAL ACCESSORIES	1" - 2" height extension	SP01520	-	-	-	-	-	-	850
TECHNICAL ACCESSORIES	0 - 1" height extension	SP02209	-	-	-	-	-	-	855
TECHNICAL ACCESSORIES	1" - 2" height extension	SP02210	-	-	-	-	-	-	855
HI-FI	Push-botton plate with RAINFALL symbol. For Linear & Shelf Hi-Fi.	SP02766	-	-	-	-	-	-	644
HI-FI	Push-botton plate with WATERFALL symbol. For Linear & Shelf Hi-Fi.	SP02767	-	-	-	-	-	-	645
HI-FI	Push-botton plate with ATOMIZER symbol. For Linear & Shelf Hi-Fi.	SP02768	-	-	-	-	-	-	645
HI-FI	Push-botton plate with HANDSHOWER symbol. For Linear & Shelf Hi-Fi.	SP02769	-	-	-	-	-	-	645
HI-FI	Push-botton plate with BODY JETS symbol. For Linear & Shelf Hi-Fi.	SP02770	-	-	-	-	-	-	645
HI-FI	Push-botton plate with BATHTUB symbol. For Linear & Shelf Hi-Fi.	SP02771	-	-	-	-	-	-	646
HI-FI	Push-botton plate with FOOT SPOUT symbol. For Linear & Shelf Hi-Fi.	SP02772	-	-	-	-	-	-	646
HI-FI	Push-botton plate with WATER TUBE KNEIPP symbol. To be combined with art. 63002, 63004, 63012, 63014, 63016, 63018, 63022, 63024, 63026, 63028, 63061, 63079, 63041, 63043.	SP02773	-	-	-	-	-	-	646
HI-FI	Push-botton plate with RAINFALL symbol. For item 63006.	SP02774	-	-	-	-	-	-	647
HI-FI	Push-botton plate with WATERFALL symbol. For item 63006.	SP02775	-	-	-	-	-	-	647
HI-FI	Push-botton plate with ATOMIZER symbol. For item 63006.	SP02776	-	-	-	-	-	-	647
HI-FI	Push-botton plate with HANDSHOWER symbol. For item 63006.	SP02777	-	-	-	-	-	-	648
HI-FI	Push-botton plate with BODY JETS symbol. For item 63006.	SP02778	-	-	-	-	-	-	648
HI-FI	Push-botton plate with BATHTUB symbol. For item 63006.	SP02779	-	-	-	-	-	-	648

GESSI

SERIES	DESCRIPTIONS	CODE	CSA	CEC	DOE	CALGREEN	EPA WATERSENSE	MASSA-CHUSSETS	PAGE
HI-FI	Push-botton plate with FOOT SPOUT symbol. For item 63006.	SP02780	-	-	-	-	-	-	648
HI-FI	Push-botton plate with WATER TUBE KNEIPP symbol, for items 63006 and 63081.	SP02781	-	-	-	-	-	-	649
HI-FI	Push-botton plate with WALL-MOUNTED WATERFALL symbol. For Linear & Shelf Hi-Fi.	SP02782	-	-	-	-	-	-	646
HI-FI	Push-botton plate with WALL-MOUNTED ATOMIZER symbol. For Linear & Shelf Hi-Fi.	SP02783	-	-	-	-	-	-	647
HI-FI	Push-botton plate with WALL-MOUNTED WATERFALL symbol. For item 63006.	SP02784	-	-	-	-	-	-	649
HI-FI	Push-botton plate with WALL-MOUNTED ATOMIZER symbol. For item 63006.	SP02785	-	-	-	-	-	-	649
TECHNICAL ACCESSORIES	0 - 1" height extension	SP02787	-	-	-	-	-	-	857
TECHNICAL ACCESSORIES	1" - 2" height extension	SP02788	-	-	-	-	-	-	858
TECHNICAL ACCESSORIES	0 - 1" height extension	SP02796	-	-	-	-	-	-	857
TECHNICAL ACCESSORIES	1" - 2" height extension	SP02797	-	-	-	-	-	-	857
TECHNICAL ACCESSORIES	0 - 1" height extension	SP02801	-	-	-	-	-	-	858
TECHNICAL ACCESSORIES	1" - 2" height extension	SP02802	-	-	-	-	-	-	858
TECHNICAL ACCESSORIES	0 - 1" height extension	SP02807	-	-	-	-	-	-	851
TECHNICAL ACCESSORIES	1" - 2" height extension	SP02808	-	-	-	-	-	-	851
TECHNICAL ACCESSORIES	0 - 1" height extension	SP02809	-	-	-	-	-	-	852
TECHNICAL ACCESSORIES	1" - 2" height extension	SP02810	-	-	-	-	-	-	852
TECHNICAL ACCESSORIES	0 - 1" height extension	SP02811	-	-	-	-	-	-	852
TECHNICAL ACCESSORIES	1" - 2" height extension	SP02812	-	-	-	-	-	-	852
TECHNICAL ACCESSORIES	0 - 1" height extension	SP02813	-	-	-	-	-	-	853
TECHNICAL ACCESSORIES	1" - 2" height extension	SP02814	-	-	-	-	-	-	853
HI-FI	Push-botton plate with RAINFALL symbol. For Hi-Fi Eclectic.	SP03289	-	-	-	-	-	-	661
HI-FI	Push-botton plate with WALL-MOUNTED ATOMIZER symbol. For Hi-Fi Eclectic.	SP03290	-	-	-	-	-	-	663
HI-FI	Push-botton plate with ATOMIZER symbol. For Hi-Fi Eclectic.	SP03291	-	-	-	-	-	-	661
HI-FI	Push-botton plate with WATERFALL symbol. For Hi-Fi Eclectic.	SP03292	-	-	-	-	-	-	661
HI-FI	Push-botton plate with WALL-MOUNTED WATERFALL symbol. For Hi-Fi Eclectic.	SP03293	-	-	-	-	-	-	663
HI-FI	Push-botton plate with HANDSHOWER symbol. For Hi-Fi Eclectic.	SP03294	-	-	-	-	-	-	662
HI-FI	Push-botton plate with BODY JETS symbol. For Hi-Fi Eclectic.	SP03295	-	-	-	-	-	-	662
HI-FI	Push-botton plate with BATHTUB symbol. For Hi-Fi Eclectic.	SP03296	-	-	-	-	-	-	662
HI-FI	Push-button plate with WATER TUBE KNEIPP symbol	SP03297	-	-	-	-	-	-	663
HI-FI	Push-botton plate with FOOT SPOUT symbol. For Hi-Fi Eclectic.	SP03298	-	-	-	-	-	-	662
TECHNICAL ACCESSORIES	0 - 2" height extension	SP04859	-	-	-	-	-	-	840
TECHNICAL ACCESSORIES	0 - 2" height extension	SP04860	-	-	-	-	-	-	840

GESSI

GESSI®



INVERSO
RIGATO



73551

Single lever washbasin mixer with Stop&Go assembly. RIGATO
- Spout projection 4-15/16”
- Height 7”
- 1-1/4” D. Drain
- Max flow rate 1.2 GPM

031	Chrome	1.131	708	Copper Br. PVD	1.785
149	Finox Br. Nickel	1.528	735	Warm Bronze PVD	1.673
299	Matte Black	1.528	726	Warm Bronze Br. PVD	1.785
706	Black Metal PVD	1.673	710	Brass PVD	1.673
707	Black Metal Br. PVD	1.785	727	Brass Br. PVD	1.785
030	Copper PVD	1.673			

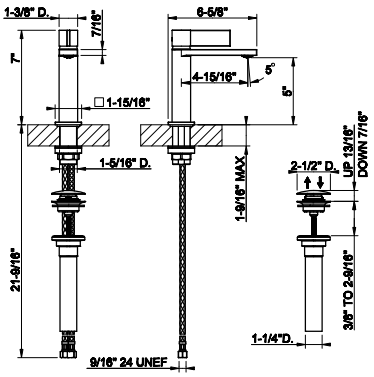



73502

Single lever washbasin mixer without Stop&Go assembly. RIGATO
- Spout projection 4-15/16”
- Height 7”
- Drain not included - See DRAINS section
- Max flow rate 1.2 GPM

031	Chrome	1.080	708	Copper Br. PVD	1.708
149	Finox Br. Nickel	1.458	735	Warm Bronze PVD	1.600
299	Matte Black	1.458	726	Warm Bronze Br. PVD	1.708
706	Black Metal PVD	1.600	710	Brass PVD	1.600
707	Black Metal Br. PVD	1.708	727	Brass Br. PVD	1.708
030	Copper PVD	1.600			

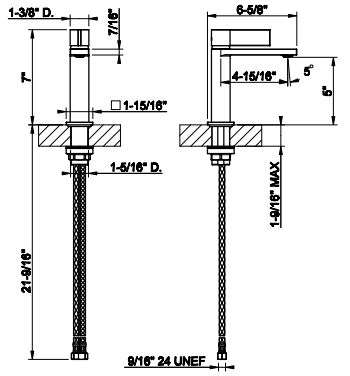



73555

Medium single lever washbasin with Stop&Go assembly. RIGATO
- Spout projection 7-13/16”
- Height 9-7/8”
- 1-1/4” D. Drain
- Max flow rate 1.2 GPM

031	Chrome	1.313	708	Copper Br. PVD	2.075
149	Finox Br. Nickel	1.773	735	Warm Bronze PVD	1.943
299	Matte Black	1.773	726	Warm Bronze Br. PVD	2.075
706	Black Metal PVD	1.943	710	Brass PVD	1.943
707	Black Metal Br. PVD	2.075	727	Brass Br. PVD	2.075
030	Copper PVD	1.943			

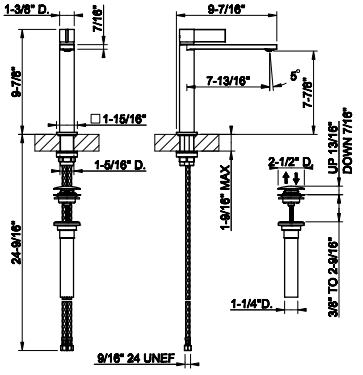



73506

Medium single lever washbasin without Stop&Go assembly. RIGATO
- Spout projection 7-13/16”
- Height 9-7/8”
- Drain not included -See DRAINS section
- Max flow rate 1.2 GPM

031	Chrome	1.265	708	Copper Br. PVD	1.995
149	Finox Br. Nickel	1.708	735	Warm Bronze PVD	1.870
299	Matte Black	1.708	726	Warm Bronze Br. PVD	1.995
706	Black Metal PVD	1.870	710	Brass PVD	1.870
707	Black Metal Br. PVD	1.995	727	Brass Br. PVD	1.995
030	Copper PVD	1.870			

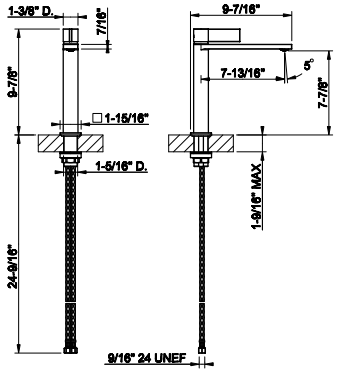

INVERSO RIGATO

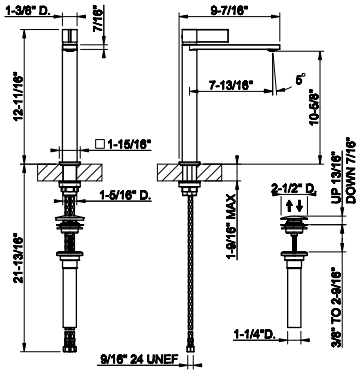

73553

Tall single lever washbasin with Stop&Go assembly. RIGATO
- Spout projection 7-13/16”
- Height 12-11/16”
- 1-1/4” D. Drain
- Max flow rate 1.2 GPM

031	Chrome	1.408	708	Copper Br. PVD	2.225
149	Finox Br. Nickel	1.903	735	Warm Bronze PVD	2.085
299	Matte Black	1.903	726	Warm Bronze Br. PVD	2.225
706	Black Metal PVD	2.085	710	Brass PVD	2.085
707	Black Metal Br. PVD	2.225	727	Brass Br. PVD	2.225
030	Copper PVD	2.085			



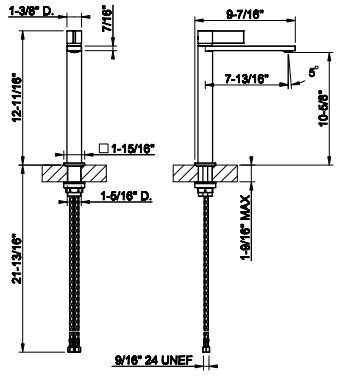

73504

Tall single lever washbasin without Stop&Go assembly. RIGATO
- Spout projection 7-13/16”
- Height 12-11/16”
- Drain not included -See DRAINS section
- Max flow rate 1.2 GPM

031	Chrome	1.357	708	Copper Br. PVD	2.145
149	Finox Br. Nickel	1.832	735	Warm Bronze PVD	2.013
299	Matte Black	1.832	726	Warm Bronze Br. PVD	2.145
706	Black Metal PVD	2.013	710	Brass PVD	2.013
707	Black Metal Br. PVD	2.145	727	Brass Br. PVD	2.145
030	Copper PVD	2.013			



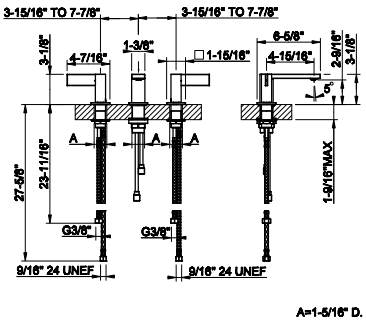

73513

Widespread washbasin mixer without pop-up assembly. RIGATO
- Spout projection 4-15/16”
- Height 3”
- Drain not included - See DRAINS section
- Max flow rate 1.2 GPM

031	Chrome	1.952	708	Copper Br. PVD	3.085
149	Finox Br. Nickel	2.637	735	Warm Bronze PVD	2.889
299	Matte Black	2.637	726	Warm Bronze Br. PVD	3.085
706	Black Metal PVD	2.889	710	Brass PVD	2.889
707	Black Metal Br. PVD	3.085	727	Brass Br. PVD	3.085
030	Copper PVD	2.889			



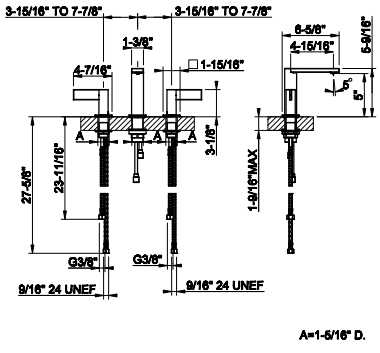

73514

Widespread washbasin mixer without pop-up assembly. RIGATO
- Spout projection 4-15/16”
- Height 5-9/16”
- Drain not included - SeeDRAINS section
- Max flow rate 1.2 GPM

031	Chrome	1.952	708	Copper Br. PVD	3.085
149	Finox Br. Nickel	2.637	735	Warm Bronze PVD	2.889
299	Matte Black	2.637	726	Warm Bronze Br. PVD	3.085
706	Black Metal PVD	2.889	710	Brass PVD	2.889
707	Black Metal Br. PVD	3.085	727	Brass Br. PVD	3.085
030	Copper PVD	2.889			



63397

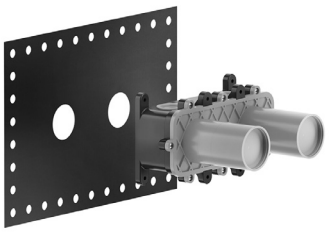

Wall-mounted washbasin mixer rough valve
• Drain not included - See DRAINS section

239	Steel Br.	900

63397+73588

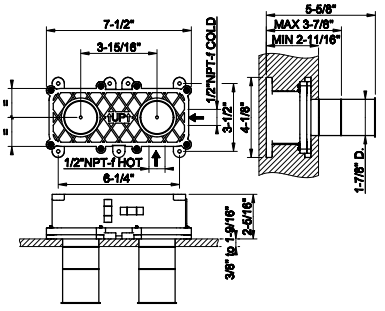

73588

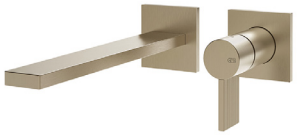

TRIM PARTS ONLY Wall-mounted washbasin mixer trim.
RIGATO
• Spout projection 7-3/4”
• Height 3-3/4”
• Drain not included - See DRAINS section
• Requires in-wall rough valve 63397
• Max flow rate 1.2 GPM

031	Chrome	1.225	708	Copper Br. PVD	1.935
149	Finox Br. Nickel	1.655	735	Warm Bronze PVD	1.813
299	Matte Black	1.655	726	Warm Bronze Br. PVD	1.935
706	Black Metal PVD	1.813	710	Brass PVD	1.813
707	Black Metal Br. PVD	1.935	727	Brass Br. PVD	1.935
030	Copper PVD	1.813			

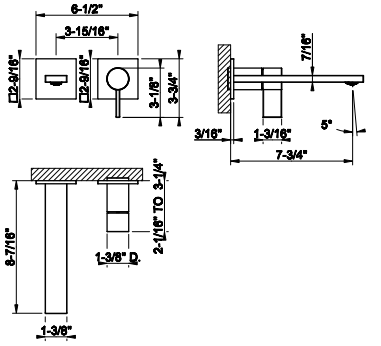

73102



Wall-mounted washbasin spout only
• Connection 1/2” NPT-F
• Spout projection 7-3/4”
• Requires mixer control
• Drain not included -See DRAINS section
• Max flow rate 1.2 GPM

031	Chrome	780	708	Copper Br. PVD	1.236
149	Finox Br. Nickel	1.055	735	Warm Bronze PVD	1.155
299	Matte Black	1.055	726	Warm Bronze Br. PVD	1.236
706	Black Metal PVD	1.155	710	Brass PVD	1.155
707	Black Metal Br. PVD	1.236	727	Brass Br. PVD	1.236
030	Copper PVD	1.155			

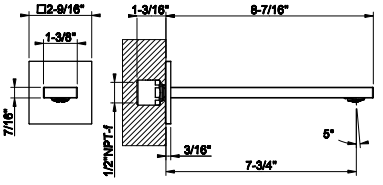

73104



Wall-mounted washbasin spout only
• Connection 1/2” NPT-F
• Spout projection 3-9/16” 11-13/16”
• Requires mixer control
• Drain notincluded - See DRAINS section
• Max flow rate 1.2 GPM

031	Chrome	1.560	708	Copper Br. PVD	2.465
149	Finox Br. Nickel	2.107	735	Warm Bronze PVD	2.310
299	Matte Black	2.107	726	Warm Bronze Br. PVD	2.465
706	Black Metal PVD	2.310	710	Brass PVD	2.310
707	Black Metal Br. PVD	2.465	727	Brass Br. PVD	2.465
030	Copper PVD	2.310			

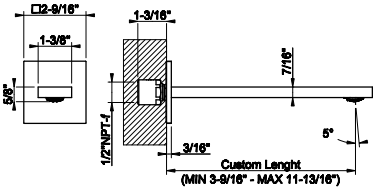

INVERSO RIGATO

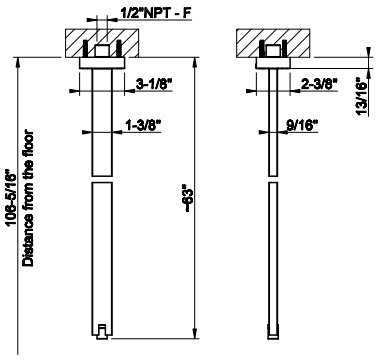

26599

Ceiling-mounted washbasin spout only
- Spout length 63”
- Drain not included - See DRAINS section
- Requires mixer control
- Max flow rate 1.2 GPM



031	Chrome	1.912	030	Copper PVD	2.828
149	Finox Br. Nickel	2.580	708	Copper Br. PVD	3.019
299	Matte Black	2.580	735	Warm Bronze PVD	2.828
720	Nickel PVD	2.828	726	Warm Bronze Br. PVD	3.019
706	Black Metal PVD	2.828	710	Brass PVD	2.828
707	Black Metal Br. PVD	3.019	727	Brass Br. PVD	3.019

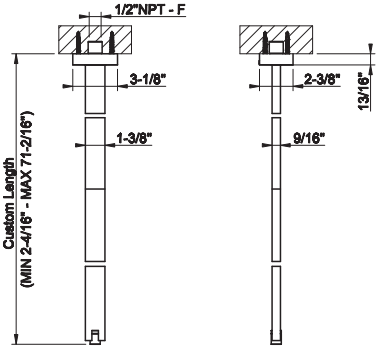

26699

Ceiling-mounted washbasin spout only
- Custom length: Min. 2-1/4” Max. 71-1/8”
- Drain not included - See DRAINS section
- Requiresmixer control
- Max flow rate 1.2 GPM



031	Chrome	2.498	030	Copper PVD	3.697
149	Finox Br. Nickel	3.373	708	Copper Br. PVD	3.947
299	Matte Black	3.373	735	Warm Bronze PVD	3.697
720	Nickel PVD	3.697	726	Warm Bronze Br. PVD	3.947
706	Black Metal PVD	3.697	710	Brass PVD	3.697
707	Black Metal Br. PVD	3.947	727	Brass Br. PVD	3.947

63412

In-wall for wall-mounted washbasin remote control. One-way

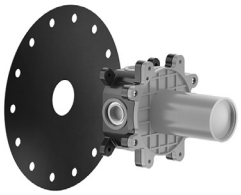

239	Steel Br.	516

63412+73509

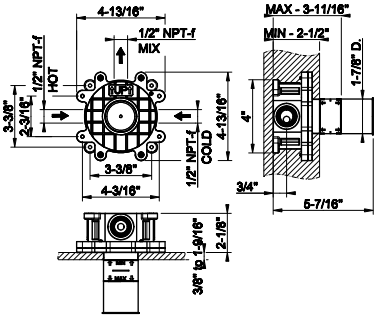

73509

TRIM PARTS ONLY Wall-mounted washbasin mixer control. RIGATO

- Connection 9/16" - 24 UNEF
- Drain not included - See DRAINS section
- Requires in-wall rough valve 63412



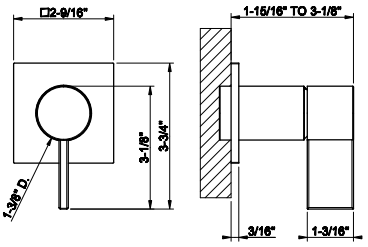

031	Chrome	526	708	Copper Br. PVD	831
149	Finox Br. Nickel	711	735	Warm Bronze PVD	778
299	Matte Black	711	726	Warm Bronze Br. PVD	831
706	Black Metal PVD	778	710	Brass PVD	778
707	Black Metal Br. PVD	831	727	Brass Br. PVD	831
030	Copper PVD	778			

INVERSO RIGATO

48189+73528

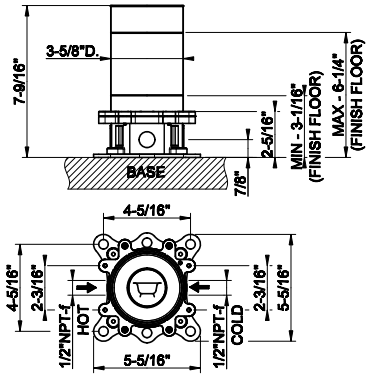

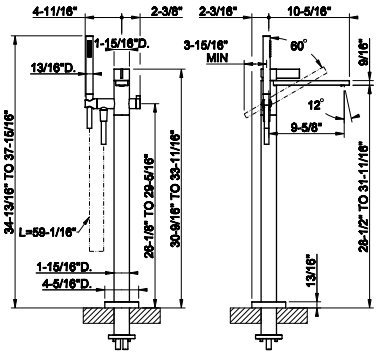

48189

Floor-mounted tub filler in-floor rough valve



031	Chrome	847

73528

TRIM PARTS ONLY Floor-mounted tub filler. RIGATO
- Handshower
- 59” flex hose
- Diverter
- Spout projection 9-5/8”
- Handshower max flow rate 1,75 GPM
- Spout mixed flow rate 5,4 GPM at 60 PSI
- Requires in-floor rough valve 48189



031	Chrome	4.696	708	Copper Br. PVD	7.420
149	Finox Br. Nickel	6.340	735	Warm Bronze PVD	6.950
299	Matte Black	6.340	726	Warm Bronze Br. PVD	7.420
706	Black Metal PVD	6.950	710	Brass PVD	6.950
707	Black Metal Br. PVD	7.420	727	Brass Br. PVD	7.420
030	Copper PVD	6.950			

73103

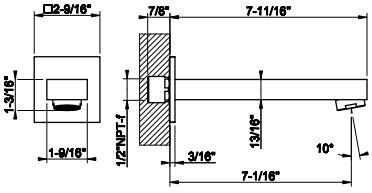

Wall-mounted bath spout only
- Connection 1/2” NPT-F
- Spout projection 7-1/16”
- Requires mixer control
- Flow rate 6,2 GPM at 60 PSI



031	Chrome	741	708	Copper Br. PVD	1.168
149	Finox Br. Nickel	998	735	Warm Bronze PVD	1.093
299	Matte Black	998	726	Warm Bronze Br. PVD	1.168
706	Black Metal PVD	1.093	710	Brass PVD	1.093
707	Black Metal Br. PVD	1.168	727	Brass Br. PVD	1.168
030	Copper PVD	1.093			

54139

Wall-mounted bath mixer control rough valve
- 1/2” connections
- Non positive shut off



239	Steel Br.	1.087

54139+73536

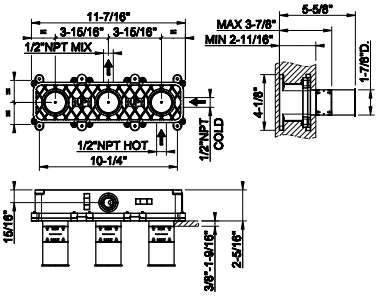

73536

TRIM PARTS ONLY Wall-mounted bath mixer control. RIGATO
- Separate backplate
- Two-ways diverter
- Water outlet
- Handshower max flow rate 1.75 GPM
- Requires inline Pressure Balance



031	Chrome	1.880	708	Copper Br. PVD	2.972
149	Finox Br. Nickel	2.540	735	Warm Bronze PVD	2.782
299	Matte Black	2.540	726	Warm Bronze Br. PVD	2.972
706	Black Metal PVD	2.782	710	Brass PVD	2.782
707	Black Metal Br. PVD	2.972	727	Brass Br. PVD	2.972
030	Copper PVD	2.782			

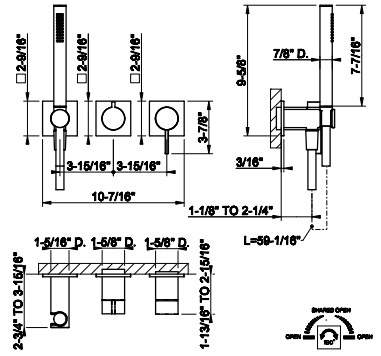

09279

In-wall thermostatic rough valve for 1/2/3-way diverter function
- 1/2” connections
- Vertical application
- Anti-scalding
- Non-Shared function

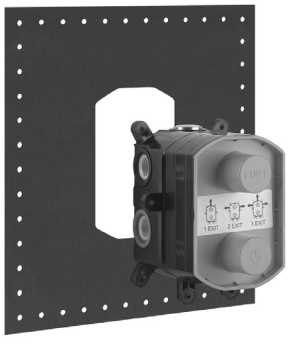

031	Chrome	877

09279+73533

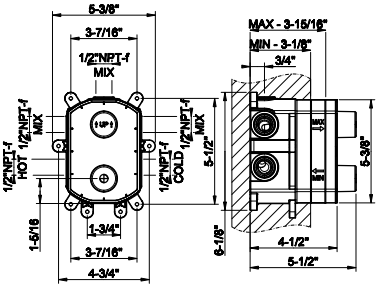

73533

TRIM PARTS ONLY External parts for thermostatic with single volume control. RIGATO
- Single backplate
- Vertical application
- Requires in-wall rough valve 09279



031	Chrome	1.785	708	Copper Br. PVD	2.823
149	Finox Br. Nickel	2.410	735	Warm Bronze PVD	2.642
299	Matte Black	2.410	726	Warm Bronze Br. PVD	2.823
706	Black Metal PVD	2.642	710	Brass PVD	2.642
707	Black Metal Br. PVD	2.823	727	Brass Br. PVD	2.823
030	Copper PVD	2.642			

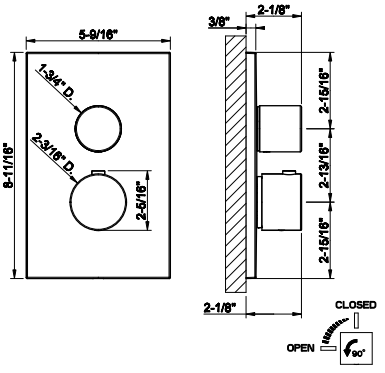

INVERSO RIGATO

09279+73535

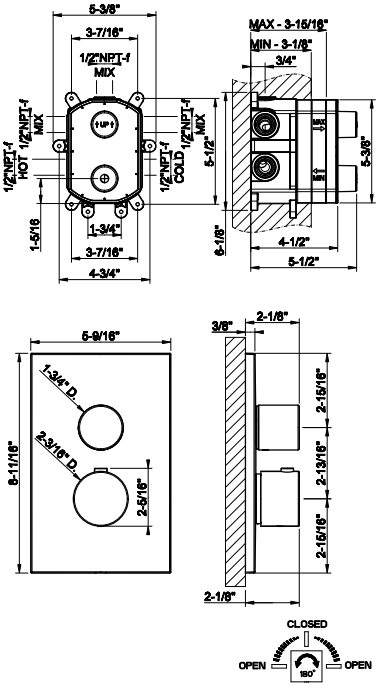

09279

In-wall thermostatic rough valve for 1/2/3-way diverter function
- 1/2” connections
- Vertical application
- Anti-scalding
- Non-Shared function

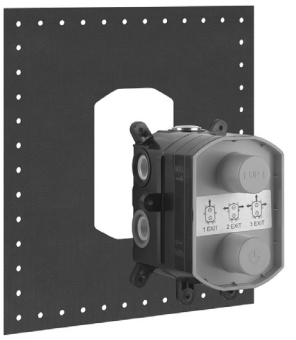

031	Chrome	877

73535

TRIM PARTS ONLY External parts for two ways diverter thermostatic and volume control. RIGATO
- Single backplate
- Vertical application
- Requires in-wall rough valve 09279



031	Chrome	1.785	708	Copper Br. PVD	2.823
149	Finox Br. Nickel	2.410	735	Warm Bronze PVD	2.642
299	Matte Black	2.410	726	Warm Bronze Br. PVD	2.823
706	Black Metal PVD	2.642	710	Brass PVD	2.642
707	Black Metal Br. PVD	2.823	727	Brass Br. PVD	2.823
030	Copper PVD	2.642			

09279+73537

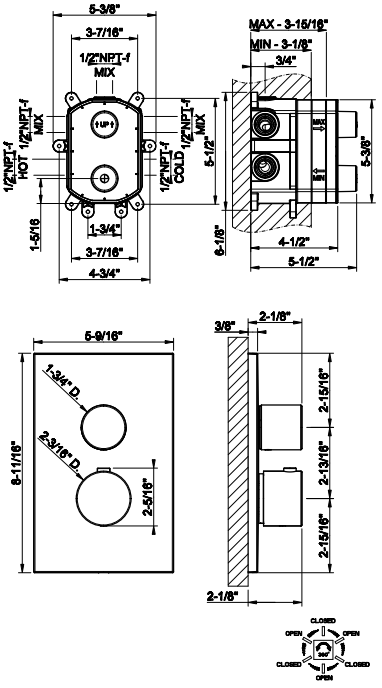

09279

In-wall thermostatic rough valve for 1/2/3-way diverter function
- 1/2” connections
- Vertical application
- Anti-scalding
- Non-Shared function

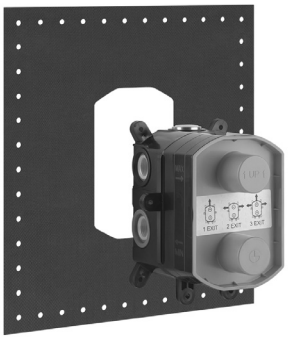

031	Chrome	877

73537

TRIM PARTS ONLY External parts for three ways diverter thermostatic and volume control. RIGATO
- Single backplate
- Vertical application
- Requires in-wall rough valve 09279



031	Chrome	1.785	708	Copper Br. PVD	2.823
149	Finox Br. Nickel	2.410	735	Warm Bronze PVD	2.642
299	Matte Black	2.410	726	Warm Bronze Br. PVD	2.823
706	Black Metal PVD	2.642	710	Brass PVD	2.642
707	Black Metal Br. PVD	2.823	727	Brass Br. PVD	2.823
030	Copper PVD	2.642			



09272

In-wall single exit pressure balance rough valve
• 1/2” connections

031	Chrome	371

09272+73572

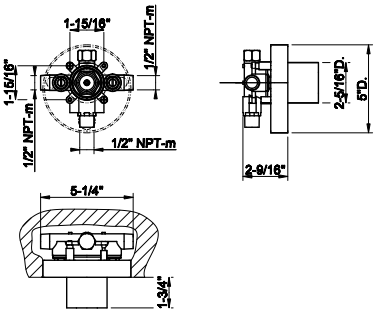



73572

TRIM PARTS ONLY External parts for single exit pressure balance. RIGATO
• Single backplate
• Requires in-wall rough valve 09272

031	Chrome	1.046	708	Copper Br. PVD	1.653
149	Finox Br. Nickel	1.413	735	Warm Bronze PVD	1.547
299	Matte Black	1.413	726	Warm Bronze Br. PVD	1.653
706	Black Metal PVD	1.547	710	Brass PVD	1.547
707	Black Metal Br. PVD	1.653	727	Brass Br. PVD	1.653
030	Copper PVD	1.547			

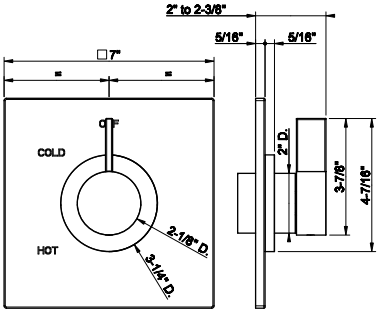



09274

In-wall pressure balance rough valve with 2-way diverter
• 1/2” connections
• Non-Shared Function

031	Chrome	443

09274+73574

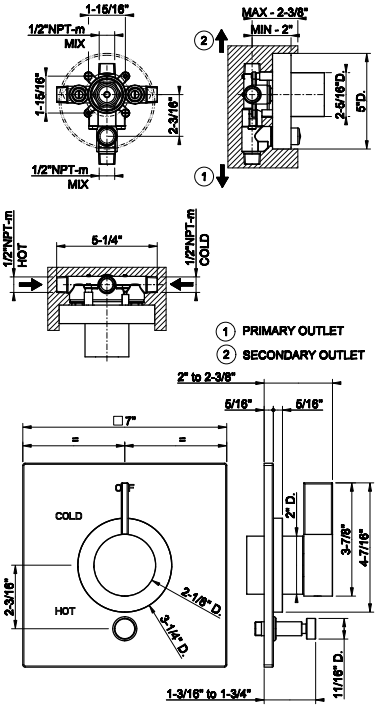



73574

TRIM PARTS ONLY External parts for pressure balance with 2 ways diverter. RIGATO
• Single backplate
• Requires in-wall rough valve 09274

031	Chrome	1.280	708	Copper Br. PVD	2.022
149	Finox Br. Nickel	1.730	735	Warm Bronze PVD	1.896
299	Matte Black	1.730	726	Warm Bronze Br. PVD	2.022
706	Black Metal PVD	1.896	710	Brass PVD	1.896
707	Black Metal Br. PVD	2.022	727	Brass Br. PVD	2.022
030	Copper PVD	1.896			

INVERSO RIGATO

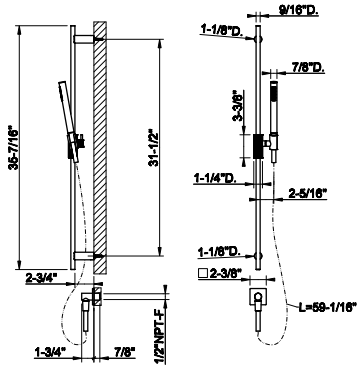

73541

Handshower and adjustable sliding rail set. RIGATO
- Adjustable bar
- Adjustable hook
- 59-1/16” hose length
- Wall elbow
- Max flowrate 1.75 GPM

031	Chrome	1.885	708	Copper Br. PVD	2.980
149	Finox Br. Nickel	2.548	735	Warm Bronze PVD	2.793
299	Matte Black	2.548	726	Warm Bronze Br. PVD	2.980
706	Black Metal PVD	2.793	710	Brass PVD	2.793
707	Black Metal Br. PVD	2.980	727	Brass Br. PVD	2.980
030	Copper PVD	2.793			





INVERSO
DIAMANTATO



73651

Single lever washbasin mixer with Stop&Go assembly.
DIAMANTATO
- Spout projection 4-15/16”
- Height 7”
- 1-1/4” D. Drain
- Max flowrate 1.2 GPM

031	Chrome	1.131	708	Copper Br. PVD	1.785
149	Finox Br. Nickel	1.528	735	Warm Bronze PVD	1.673
299	Matte Black	1.528	726	Warm Bronze Br. PVD	1.785
706	Black Metal PVD	1.673	710	Brass PVD	1.673
707	Black Metal Br. PVD	1.785	727	Brass Br. PVD	1.785
030	Copper PVD	1.673			

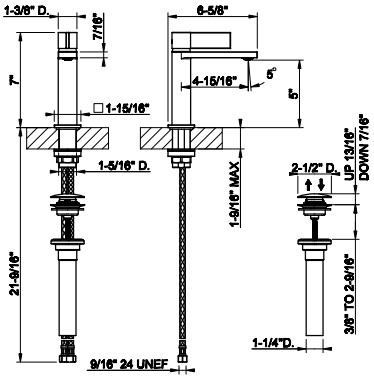



73602

Single lever washbasin mixer without Stop&Go assembly.
DIAMANTATO
- Spout projection 4-15/16”
- Height 7”
- Drain not included - See DRAINS section
- Max flow rate 1.2 GPM

031	Chrome	1.080	708	Copper Br. PVD	1.708
149	Finox Br. Nickel	1.458	735	Warm Bronze PVD	1.600
299	Matte Black	1.458	726	Warm Bronze Br. PVD	1.708
706	Black Metal PVD	1.600	710	Brass PVD	1.600
707	Black Metal Br. PVD	1.708	727	Brass Br. PVD	1.708
030	Copper PVD	1.600			

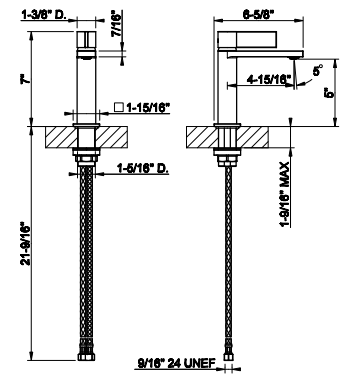



73655

Medium single lever washbasin with Stop&Go assembly.
DIAMANTATO
- Spout projection 7-13/16”
- Height 9-7/8”
- 1-1/4” D. Drain
- Maxflow rate 1.2 GPM

031	Chrome	1.313	708	Copper Br. PVD	2.075
149	Finox Br. Nickel	1.773	735	Warm Bronze PVD	1.943
299	Matte Black	1.773	726	Warm Bronze Br. PVD	2.075
706	Black Metal PVD	1.943	710	Brass PVD	1.943
707	Black Metal Br. PVD	2.075	727	Brass Br. PVD	2.075
030	Copper PVD	1.943			

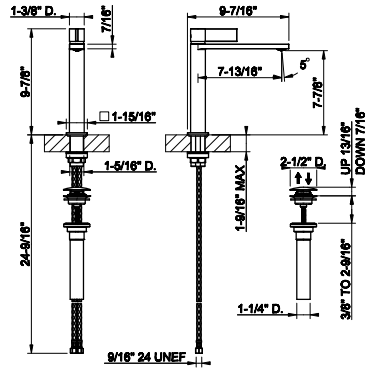



73606

Medium single lever washbasin without Stop&Go assembly.
DIAMANTATO
- Spout projection 7-13/16”
- Height 9-7/8”
- Drain not included - See DRAINS section
- Max flow rate 1.2 GPM

031	Chrome	1.265	708	Copper Br. PVD	1.995
149	Finox Br. Nickel	1.708	735	Warm Bronze PVD	1.870
299	Matte Black	1.708	726	Warm Bronze Br. PVD	1.995
706	Black Metal PVD	1.870	710	Brass PVD	1.870
707	Black Metal Br. PVD	1.995	727	Brass Br. PVD	1.995
030	Copper PVD	1.870			

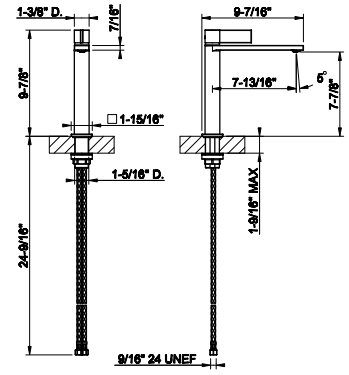

INVERSO DIAMANTATO

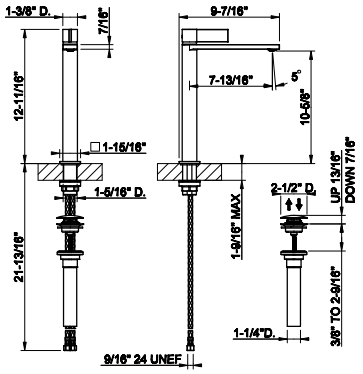

73653

Tall single lever washbasin with Stop&Go assembly.
DIAMANTATO
- Spout projection 7-13/16”
- Height 12-11/16”
- 1-1/4” D. Drain
- Max flow rate 1.2 GPM

031	Chrome	1.408	708	Copper Br. PVD	2.225
149	Finox Br. Nickel	1.903	735	Warm Bronze PVD	2.085
299	Matte Black	1.903	726	Warm Bronze Br. PVD	2.225
706	Black Metal PVD	2.085	710	Brass PVD	2.085
707	Black Metal Br. PVD	2.225	727	Brass Br. PVD	2.225
030	Copper PVD	2.085			



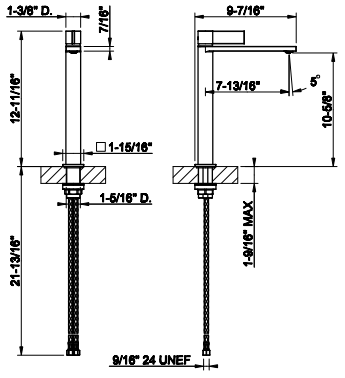

73604

Tall single lever washbasin without Stop&Go assembly.
DIAMANTATO
- Spout projection 7-13/16”
- Height 12-11/16”
- Drain not included - See DRAINS section
- Max flow rate 1.2 GPM

031	Chrome	1.357	708	Copper Br. PVD	2.145
149	Finox Br. Nickel	1.832	735	Warm Bronze PVD	2.013
299	Matte Black	1.832	726	Warm Bronze Br. PVD	2.145
706	Black Metal PVD	2.013	710	Brass PVD	2.013
707	Black Metal Br. PVD	2.145	727	Brass Br. PVD	2.145
030	Copper PVD	2.013			



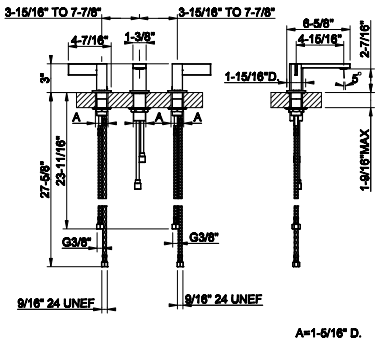

73613

Widespread washbasin mixer without pop-up assembly.
DIAMANTATO
- Spout projection 4-15/16”
- Height 3”
- Drain not included - See DRAINS section
- Max flow rate 1.2 GPM

031	Chrome	1.952	708	Copper Br. PVD	3.085
149	Finox Br. Nickel	2.637	735	Warm Bronze PVD	2.889
299	Matte Black	2.637	726	Warm Bronze Br. PVD	3.085
706	Black Metal PVD	2.889	710	Brass PVD	2.889
707	Black Metal Br. PVD	3.085	727	Brass Br. PVD	3.085
030	Copper PVD	2.889			



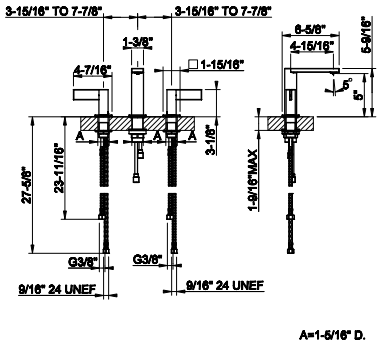

73614

Widespread washbasin mixer without pop-up assembly.
DIAMANTATO
- Spout projection 4-15/16”
- Height 5-9/16”
- Drain not included -See DRAINS section
- Max flow rate 1.2 GPM

031	Chrome	1.952	708	Copper Br. PVD	3.085
149	Finox Br. Nickel	2.637	735	Warm Bronze PVD	2.889
299	Matte Black	2.637	726	Warm Bronze Br. PVD	3.085
706	Black Metal PVD	2.889	710	Brass PVD	2.889
707	Black Metal Br. PVD	3.085	727	Brass Br. PVD	3.085
030	Copper PVD	2.889			



63397

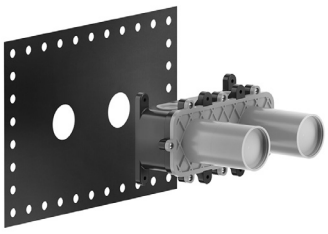

Wall-mounted washbasin mixer rough valve
• Drain not included - See DRAINS section

239	Steel Br.	900

63397+73688

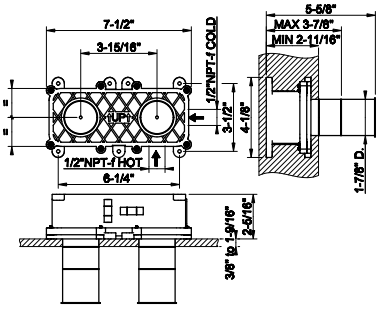

73688

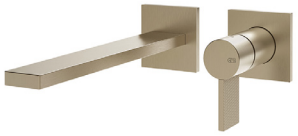

TRIM PARTS ONLY Wall-mounted washbasin mixer trim. DIAMANTATO
• Spout projection 7-3/4”
• Height 2-9/16”
• Drain not included - See DRAINS section
• Requires in-wall rough valve 63397
• Max flow rate 1.2 GPM

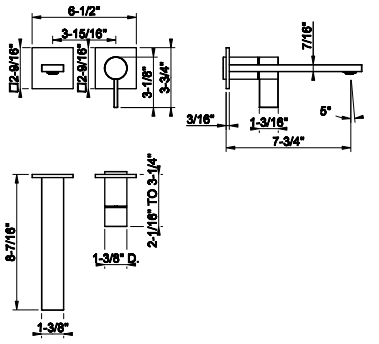

031	Chrome	1.225	708	Copper Br. PVD	1.935
149	Finox Br. Nickel	1.655	735	Warm Bronze PVD	1.813
299	Matte Black	1.655	726	Warm Bronze Br. PVD	1.935
706	Black Metal PVD	1.813	710	Brass PVD	1.813
707	Black Metal Br. PVD	1.935	727	Brass Br. PVD	1.935
030	Copper PVD	1.813			

73102



Wall-mounted washbasin spout only
• Connection 1/2” NPT-F
• Spout projection 7-3/4”
• Requires mixer control
• Drain not included -See DRAINS section
• Max flow rate 1.2 GPM

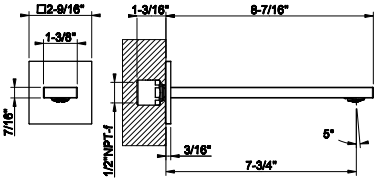

031	Chrome	780	708	Copper Br. PVD	1.236
149	Finox Br. Nickel	1.055	735	Warm Bronze PVD	1.155
299	Matte Black	1.055	726	Warm Bronze Br. PVD	1.236
706	Black Metal PVD	1.155	710	Brass PVD	1.155
707	Black Metal Br. PVD	1.236	727	Brass Br. PVD	1.236
030	Copper PVD	1.155			

73104



Wall-mounted washbasin spout only
• Connection 1/2” NPT-F
• Spout projection 3-9/16” 11-13/16”
• Requires mixer control
• Drain notincluded - See DRAINS section
• Max flow rate 1.2 GPM

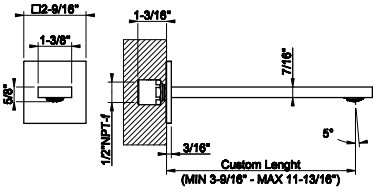

031	Chrome	1.560	708	Copper Br. PVD	2.465
149	Finox Br. Nickel	2.107	735	Warm Bronze PVD	2.310
299	Matte Black	2.107	726	Warm Bronze Br. PVD	2.465
706	Black Metal PVD	2.310	710	Brass PVD	2.310
707	Black Metal Br. PVD	2.465	727	Brass Br. PVD	2.465
030	Copper PVD	2.310			

INVERSO DIAMANTATO

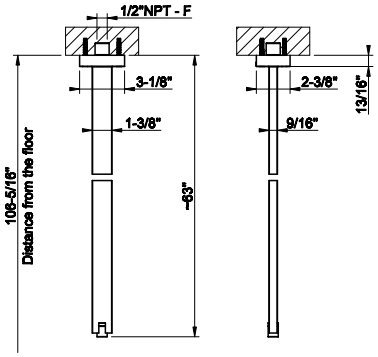

26599

Ceiling-mounted washbasin spout only
- Spout length 63”
- Drain not included - See DRAINS section
- Requires mixer control
- Max flow rate 1.2 GPM

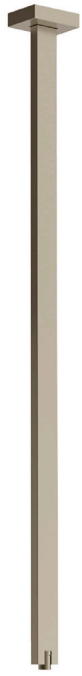

031	Chrome	1.912	030	Copper PVD	2.828
149	Finox Br. Nickel	2.580	708	Copper Br. PVD	3.019
299	Matte Black	2.580	735	Warm Bronze PVD	2.828
720	Nickel PVD	2.828	726	Warm Bronze Br. PVD	3.019
706	Black Metal PVD	2.828	710	Brass PVD	2.828
707	Black Metal Br. PVD	3.019	727	Brass Br. PVD	3.019

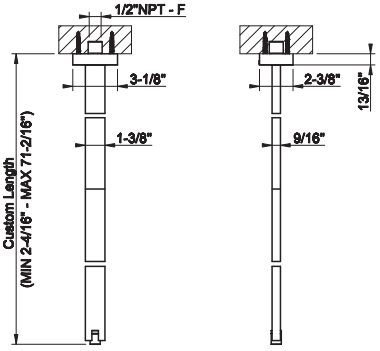

26699

Ceiling-mounted washbasin spout only
- Custom length: Min. 2-1/4” Max. 71-1/8”
- Drain not included - See DRAINS section
- Requiresmixer control
- Max flow rate 1.2 GPM



031	Chrome	2.498	030	Copper PVD	3.697
149	Finox Br. Nickel	3.373	708	Copper Br. PVD	3.947
299	Matte Black	3.373	735	Warm Bronze PVD	3.697
720	Nickel PVD	3.697	726	Warm Bronze Br. PVD	3.947
706	Black Metal PVD	3.697	710	Brass PVD	3.697
707	Black Metal Br. PVD	3.947	727	Brass Br. PVD	3.947

63412

In-wall for wall-mounted washbasin remote control. One-way

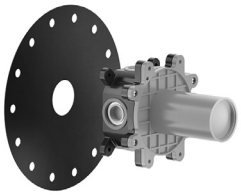

239	Steel Br.	516

63412+73609

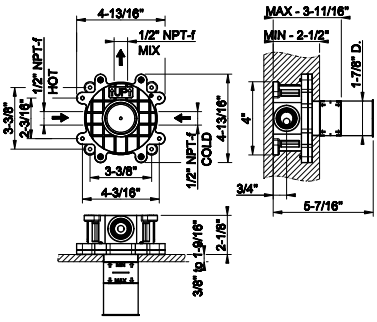

73609

TRIM PARTS ONLY Wall-mounted washbasin mixer control. DIAMANTATO

- Connection 9/16" - 24 UNEF
- Drain not included - See DRAINS section
- Requires in-wall rough valve 63412



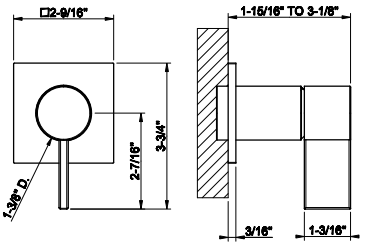

031	Chrome	526	708	Copper Br. PVD	831
149	Finox Br. Nickel	711	735	Warm Bronze PVD	778
299	Matte Black	711	726	Warm Bronze Br. PVD	831
706	Black Metal PVD	778	710	Brass PVD	778
707	Black Metal Br. PVD	831	727	Brass Br. PVD	831
030	Copper PVD	778			

INVERSO DIAMANTATO

48189+73628

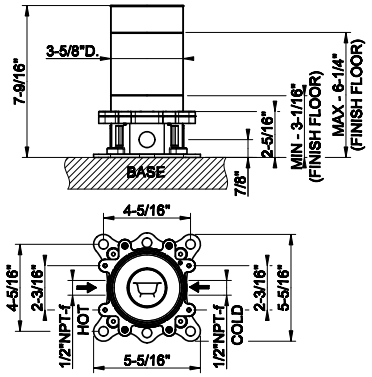

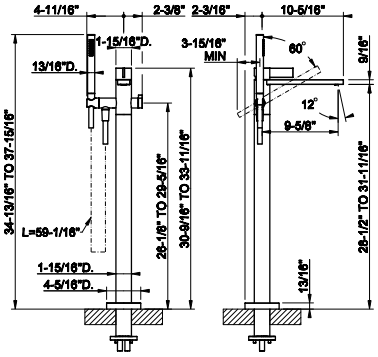

48189

Floor-mounted tub filler in-floor rough valve



031	Chrome	847

73628

TRIM PARTS ONLY Floor-mounted tub filler. DIAMANTATO
- Handshower
- 59” flex hose
- Diverter
- Spout projection 9-5/8”
- Handshower max flow rate 1,75 GPM
- Spout mixed flow rate 5,4 GPM at 60 PSI
- Requires in-floor rough valve 48189



031	Chrome	4.696	708	Copper Br. PVD	7.420
149	Finox Br. Nickel	6.340	735	Warm Bronze PVD	6.950
299	Matte Black	6.340	726	Warm Bronze Br. PVD	7.420
706	Black Metal PVD	6.950	710	Brass PVD	6.950
707	Black Metal Br. PVD	7.420	727	Brass Br. PVD	7.420
030	Copper PVD	6.950			

73103

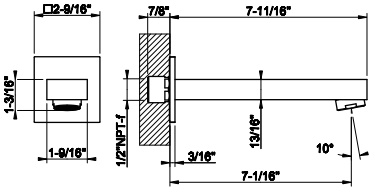

Wall-mounted bath spout only
- Connection 1/2” NPT-F
- Spout projection 7-1/16”
- Requires mixer control
- Flow rate 6,2 GPM at 60 PSI



031	Chrome	741	708	Copper Br. PVD	1.168
149	Finox Br. Nickel	998	735	Warm Bronze PVD	1.093
299	Matte Black	998	726	Warm Bronze Br. PVD	1.168
706	Black Metal PVD	1.093	710	Brass PVD	1.093
707	Black Metal Br. PVD	1.168	727	Brass Br. PVD	1.168
030	Copper PVD	1.093			

54139



Wall-mounted bath mixer control rough valve
- 1/2” connections
- Non positive shut off

239	Steel Br.	1.087

54139+73636

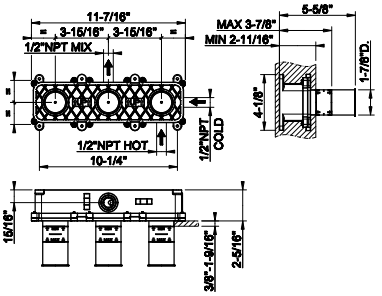

73636



TRIM PARTS ONLY Wall-mounted bath mixer control. DIAMANTATO
- Separate backplate
- Two-ways diverter
- Water outlet
- Handshower maxflow rate 1.75 GPM
- Requires inline Pressure Balance

031	Chrome	1.880	708	Copper Br. PVD	2.972
149	Finox Br. Nickel	2.540	735	Warm Bronze PVD	2.782
299	Matte Black	2.540	726	Warm Bronze Br. PVD	2.972
706	Black Metal PVD	2.782	710	Brass PVD	2.782
707	Black Metal Br. PVD	2.972	727	Brass Br. PVD	2.972
030	Copper PVD	2.782			

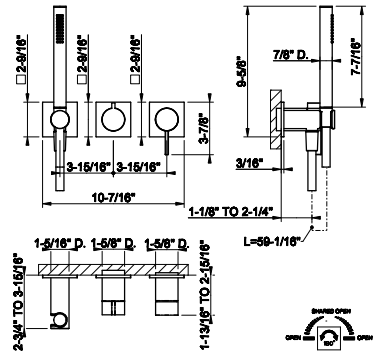

09279

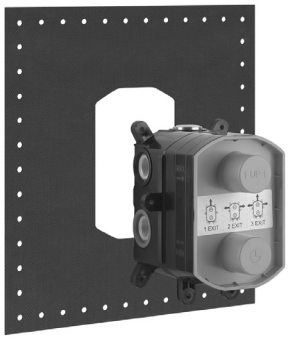

In-wall thermostatic rough valve for 1/2/3-way diverter function
- 1/2” connections
- Vertical application
- Anti-scalding
- Non-Shared function

031	Chrome	877

09279+73633

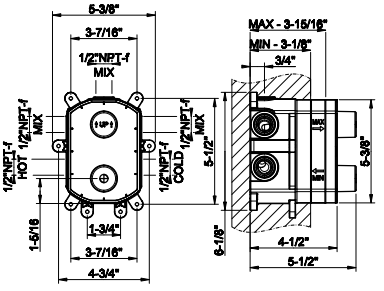

73633



TRIM PARTS ONLY External parts for thermostatic with single volume control. DIAMANTATO
- Single backplate
- Vertical application
- Requires in-wall rough valve 09279

031	Chrome	1.785	708	Copper Br. PVD	2.823
149	Finox Br. Nickel	2.410	735	Warm Bronze PVD	2.642
299	Matte Black	2.410	726	Warm Bronze Br. PVD	2.823
706	Black Metal PVD	2.642	710	Brass PVD	2.642
707	Black Metal Br. PVD	2.823	727	Brass Br. PVD	2.823
030	Copper PVD	2.642			

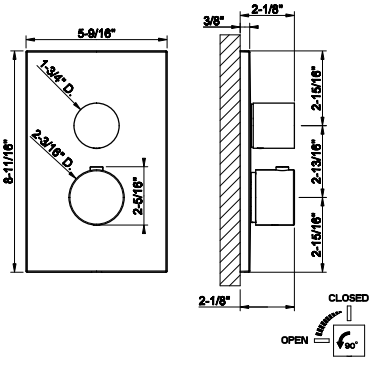

INVERSO DIAMANTATO

09279+73635

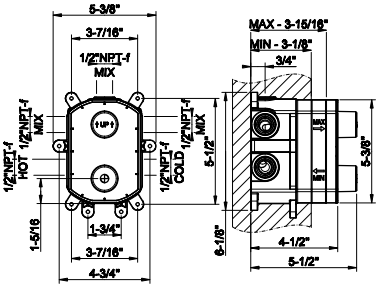

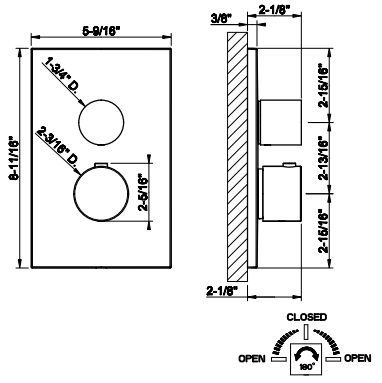

09279

In-wall thermostatic rough valve for 1/2/3-way diverter function
- 1/2” connections
- Vertical application
- Anti-scalding
- Non-Shared function

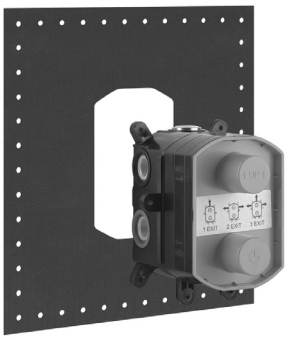

031	Chrome	877

73635

TRIM PARTS ONLY External parts for two ways diverter thermostatic and volume control. DIAMANTATO
- Single backplate
- Vertical application
- Requires in-wall rough valve 09279



031	Chrome	1.785	708	Copper Br. PVD	2.823
149	Finox Br. Nickel	2.410	735	Warm Bronze PVD	2.642
299	Matte Black	2.410	726	Warm Bronze Br. PVD	2.823
706	Black Metal PVD	2.642	710	Brass PVD	2.642
707	Black Metal Br. PVD	2.823	727	Brass Br. PVD	2.823
030	Copper PVD	2.642			

09279+73637

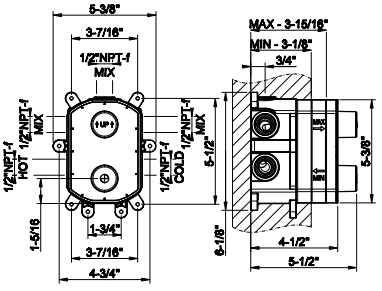

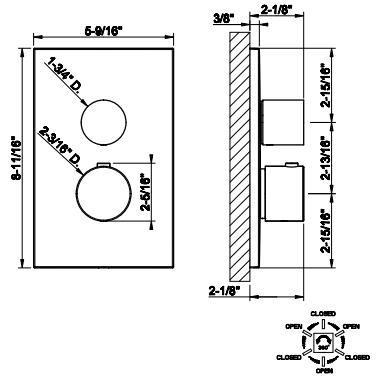

09279

In-wall thermostatic rough valve for 1/2/3-way diverter function
- 1/2” connections
- Vertical application
- Anti-scalding
- Non-Shared function

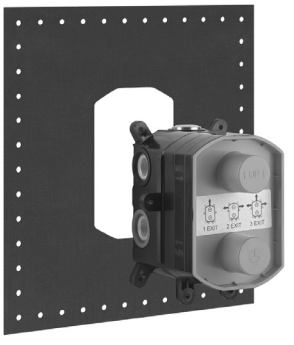

031	Chrome	877

73637

TRIM PARTS ONLY External parts for three ways diverter thermostatic and volume control. DIAMANTATO
- Single backplate
- Verticalapplication
- Requires in-wall rough valve 09279



031	Chrome	1.785	708	Copper Br. PVD	2.823
149	Finox Br. Nickel	2.410	735	Warm Bronze PVD	2.642
299	Matte Black	2.410	726	Warm Bronze Br. PVD	2.823
706	Black Metal PVD	2.642	710	Brass PVD	2.642
707	Black Metal Br. PVD	2.823	727	Brass Br. PVD	2.823
030	Copper PVD	2.642			

09272



In-wall single exit pressure balance rough valve
• 1/2” connections

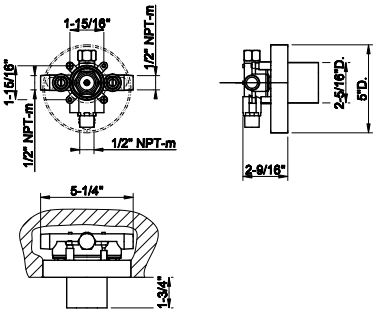

031	Chrome	371

73672



TRIM PARTS ONLY External parts for single exit pressure balance. DIAMANTATO
• Single backplate
• Requires in-wall rough valve 09272

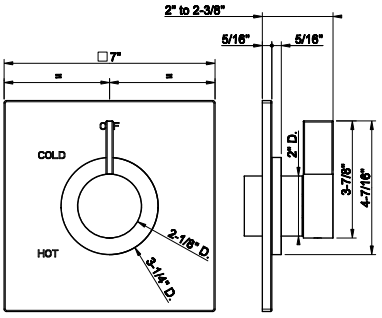

031	Chrome	1.046	708	Copper Br. PVD	1.653
149	Finox Br. Nickel	1.413	735	Warm Bronze PVD	1.547
299	Matte Black	1.413	726	Warm Bronze Br. PVD	1.653
706	Black Metal PVD	1.547	710	Brass PVD	1.547
707	Black Metal Br. PVD	1.653	727	Brass Br. PVD	1.653
030	Copper PVD	1.547			

09274



In-wall pressure balance rough valve with 2-way diverter
• 1/2” connections
• Non-Shared Function

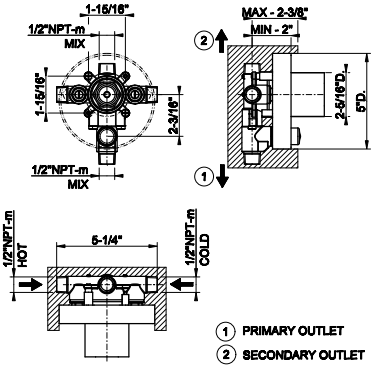

031	Chrome	443

73674



TRIM PARTS ONLY External parts for pressure balance with 2 ways diverter. DIAMANTATO
• Single backplate
• Requires in-wall roughvalve 09274

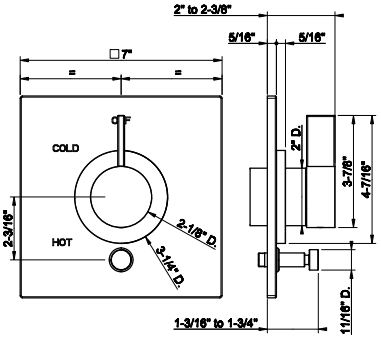

031	Chrome	1.280	708	Copper Br. PVD	2.022
149	Finox Br. Nickel	1.730	735	Warm Bronze PVD	1.896
299	Matte Black	1.730	726	Warm Bronze Br. PVD	2.022
706	Black Metal PVD	1.896	710	Brass PVD	1.896
707	Black Metal Br. PVD	2.022	727	Brass Br. PVD	2.022
030	Copper PVD	1.896			

INVERSO DIAMANTATO

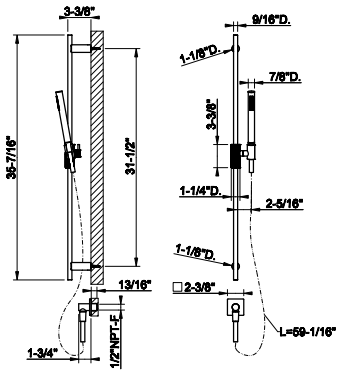

73641

Handshower and adjustable sliding rail set. DIAMANTATO
- Adjustable bar
- Adjustable hook
- 59-1/16” hose length
- Wall elbow
- Max flow rate 1.75 GPM

031	Chrome	1.885	708	Copper Br. PVD	2.980
149	Finox Br. Nickel	2.548	735	Warm Bronze PVD	2.793
299	Matte Black	2.548	726	Warm Bronze Br. PVD	2.980
706	Black Metal PVD	2.793	710	Brass PVD	2.793
707	Black Metal Br. PVD	2.980	727	Brass Br. PVD	2.980
030	Copper PVD	2.793			



GESSI®



INVERSO
BATH & SHOWER

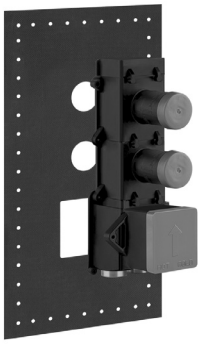

39693

In-wall thermostatic rough valve with 2 volume controls
- High capacity
- 3/4” connections
- Vertical/Horizontal application
- Anti-scalding

031	Chrome	1.903

39693+39712

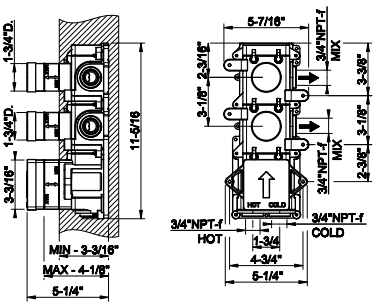



39712

TRIM PARTS ONLY External parts for thermostatic with 2 volume controls
- Single backplate
- High capacity
- 3/4” connections
- Vertical/Horizontal application
- Anti-scalding
- Requires in-wall rough valve 39693

031	Chrome	2.051	030	Copper PVD	3.034
149	Finox Br. Nickel	2.769	708	Copper Br. PVD	3.240
299	Matte Black	2.769	735	Warm Bronze PVD	3.034
720	Nickel PVD	3.034	726	Warm Bronze Br. PVD	3.240
706	Black Metal PVD	3.034	710	Brass PVD	3.034
707	Black Metal Br. PVD	3.240	727	Brass Br. PVD	3.240

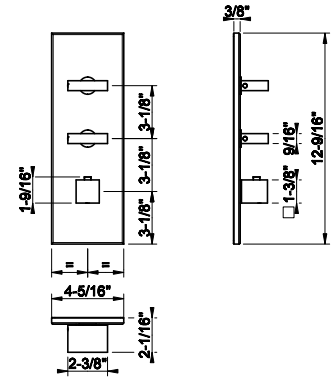

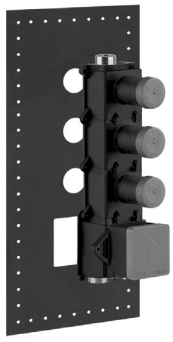

39695

In-wall thermostatic rough valve with 3 volume controls
- High capacity
- 3/4” connections
- Vertical/Horizontal application
- Anti-scalding

031	Chrome	2.197

39695+39714

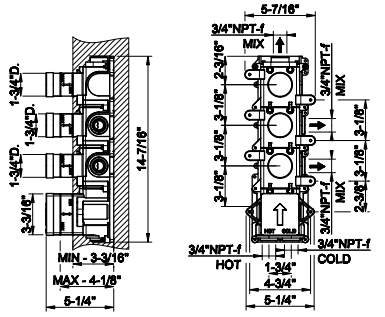



39714

TRIM PARTS ONLY External parts for thermostatic with 3 volume controls
- Single backplate
- High capacity
- 3/4” connections
- Vertical/Horizontal application
- Anti-scalding
- Requires in-wall rough valve 39695

031	Chrome	2.343	030	Copper PVD	3.469
149	Finox Br. Nickel	3.164	708	Copper Br. PVD	3.702
299	Matte Black	3.164	735	Warm Bronze PVD	3.469
720	Nickel PVD	3.469	726	Warm Bronze Br. PVD	3.702
706	Black Metal PVD	3.469	710	Brass PVD	3.469
707	Black Metal Br. PVD	3.702	727	Brass Br. PVD	3.702

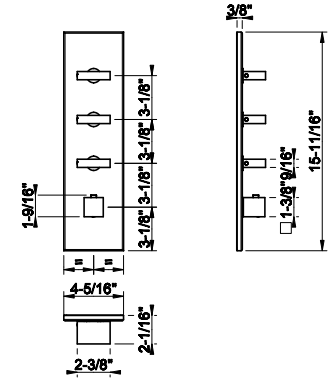

INVERSO BATH&SHOWER

39699+39716

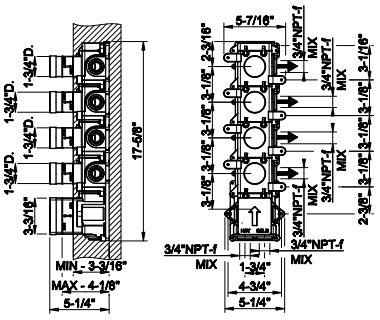

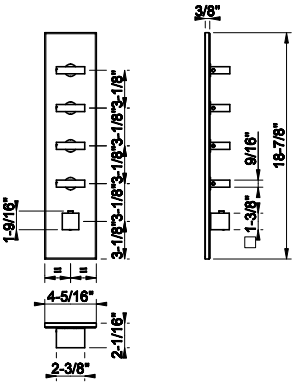

39699

In-wall thermostatic rough valve with 4 volume controls
- High capacity
- 3/4" connections
- Vertical/Horizontal application
- Anti-scalding
- Max flow rate 1.75 GPM

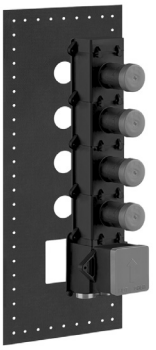

031	Chrome	2.498

39716

TRIM PARTS ONLY External parts for thermostatic with 4 volume controls
- Single backplate
- High capacity
- 3/4" connections
- Vertical/Horizontal application
- Anti-scalding
- Requires in-wall rough valve 39699



031	Chrome	2.637	030	Copper PVD	3.905
149	Finox Br. Nickel	3.561	708	Copper Br. PVD	4.168
299	Matte Black	3.561	735	Warm Bronze PVD	3.905
720	Nickel PVD	3.905	726	Warm Bronze Br. PVD	4.168
706	Black Metal PVD	3.905	710	Brass PVD	3.905
707	Black Metal Br. PVD	4.168	727	Brass Br. PVD	4.168

39601+39720

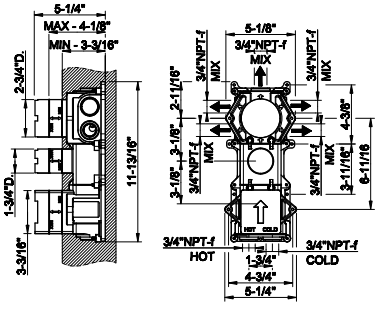

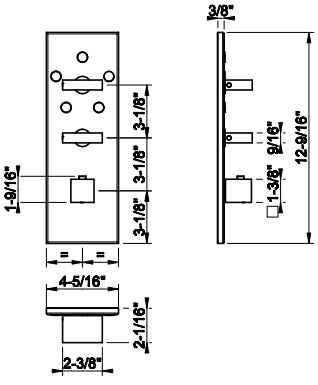

39601

In-wall thermostatic rough valve with 5-way diverter
- High capacity
- 3/4" connections
- Vertical/Horizontal application
- Anti-scalding
- Non shared function

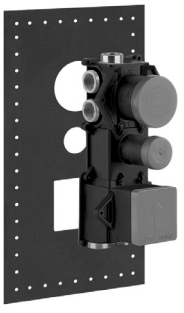

031	Chrome	2.637

39720

TRIM PARTS ONLY External parts for 5-way thermostatic diverter with volume control
- Single backplate
- High capacity
- 3/4" connections
- Vertical/Horizontal application
- Anti-scalding
- Requires in-wall rough valve 39601



031	Chrome	2.051	030	Copper PVD	3.034
149	Finox Br. Nickel	2.769	708	Copper Br. PVD	3.240
299	Matte Black	2.769	735	Warm Bronze PVD	3.034
720	Nickel PVD	3.034	726	Warm Bronze Br. PVD	3.240
706	Black Metal PVD	3.034	710	Brass PVD	3.034
707	Black Metal Br. PVD	3.240	727	Brass Br. PVD	3.240

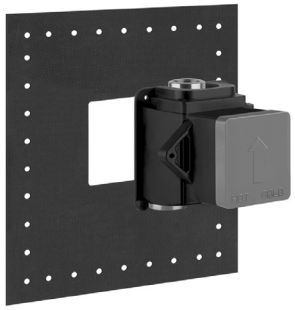

39681

In-wall thermostatic rough valve for individual mixer
- High capacity
- 3/4” connections
- Vertical/Horizontal application
- Anti-scalding

031	Chrome	1.169

39681+39654

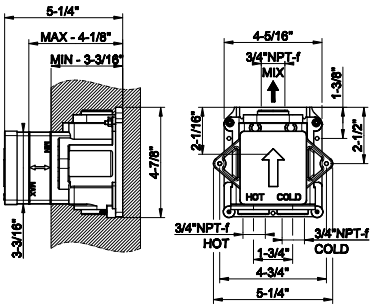



39654

TRIM PARTS ONLY External parts for individual thermostatic mixer
- High capacity
- 3/4” connections
- Vertical/Horizontal application
- Anti-scalding
- Requires in-wall rough valve 39681

031	Chrome	877	030	Copper PVD	1.298
149	Finox Br. Nickel	1.183	708	Copper Br. PVD	1.385
299	Matte Black	1.183	735	Warm Bronze PVD	1.298
720	Nickel PVD	1.298	726	Warm Bronze Br. PVD	1.385
706	Black Metal PVD	1.298	710	Brass PVD	1.298
707	Black Metal Br. PVD	1.385	727	Brass Br. PVD	1.385

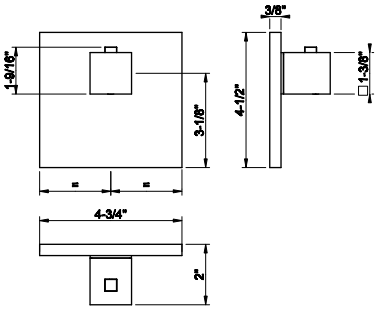

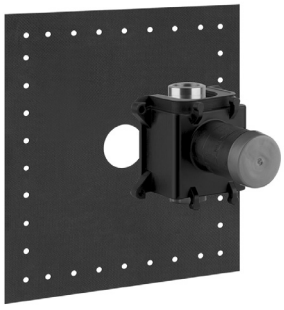

39683

In-wall thermostatic rough valve parts for volume control
- High capacity
- 3/4” connections
- Vertical/Horizontal application
- Anti-scalding

031	Chrome	582

39683+43264

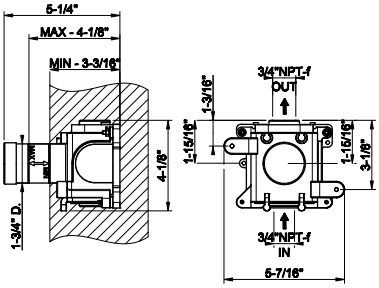

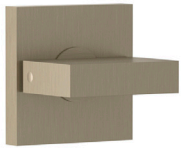

43264

TRIM PARTS ONLY External parts for individual thermostatic volume control
- High capacity
- 3/4” connections
- Vertical/Horizontalapplication
- Anti-scalding
- Requires in-wall rough valve 39683
- ADA compliant

031	Chrome	517	030	Copper PVD	794
149	Finox Br. Nickel	725	708	Copper Br. PVD	848
299	Matte Black	725	735	Warm Bronze PVD	794
720	Nickel PVD	794	726	Warm Bronze Br. PVD	848
706	Black Metal PVD	794	710	Brass PVD	794
707	Black Metal Br. PVD	848	727	Brass Br. PVD	848

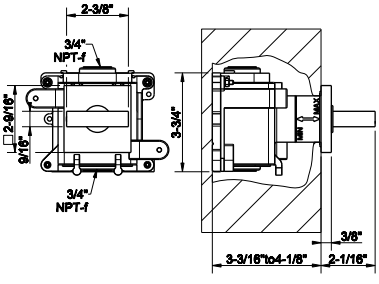

INVERSO BATH&SHOWER

33095

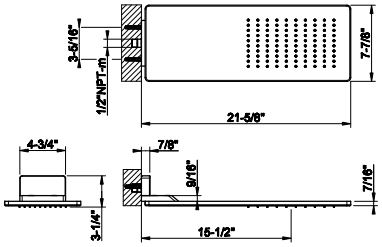

Wall-fixing headshower.
- 1/2” connections
- Projection from the wall to center15-1/2”
- Total projection 21-5/8”
- Max flow rate1.75 GPM



239	Steel Br.	4.784	726	Warm Bronze Br. PVD	7.559
238	Mirror Steel	4.784	710	Brass PVD	7.081
299	Matte Black	6.459	727	Brass Br. PVD	7.559
720	Nickel PVD	7.081	246	Gold PVD	8.038
706	Black Metal PVD	7.081	716	Gold Br. PVD	8.038
707	Black Metal Br. PVD	7.559	845	Dark Bronze	7.559
030	Copper PVD	7.081	187	Aged Bronze	7.559
708	Copper Br. PVD	7.559	713	Antique Brass	7.559
735	Warm Bronze PVD	7.081	279	Matte White	6.459

63448

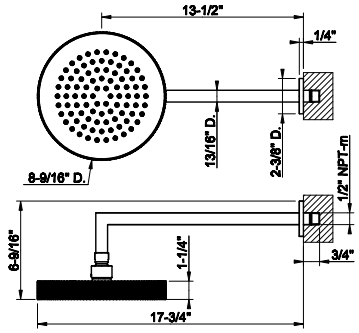

Wall-mounted adjustable shower head with arm DIAMANTATO.
- 1/2” connections.
- Projection from wall to center 13-1/2”
- Total projection 17-3/4”
- Max flow rate 1.75 GPM



031	Chrome	2.488	708	Copper Br. PVD	3.931
149	Finox Br. Nickel	3.361	735	Warm Bronze PVD	3.685
299	Matte Black	3.361	726	Warm Bronze Br. PVD	3.931
720	Nickel PVD	3.685	710	Brass PVD	3.685
706	Black Metal PVD	3.685	727	Brass Br. PVD	3.931
707	Black Metal Br. PVD	3.931	187	Aged Bronze	3.931
030	Copper PVD	3.685	713	Antique Brass	3.931

63548

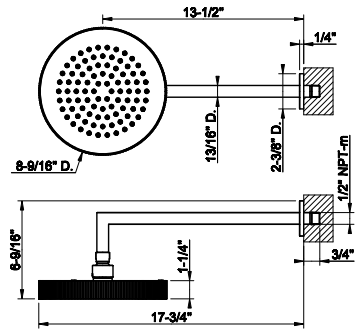

Wall-mounted adjustable shower head with arm RIGATO.
- 1/2” connections.
- Projection from wall to center 13-1/2”
- Total projection 17-3/4”
- Max flow rate 1.75 GPM



031	Chrome	2.488	708	Copper Br. PVD	3.931
149	Finox Br. Nickel	3.361	735	Warm Bronze PVD	3.685
299	Matte Black	3.361	726	Warm Bronze Br. PVD	3.931
720	Nickel PVD	3.685	710	Brass PVD	3.685
706	Black Metal PVD	3.685	727	Brass Br. PVD	3.931
707	Black Metal Br. PVD	3.931	187	Aged Bronze	3.931
030	Copper PVD	3.685	713	Antique Brass	3.931

63452

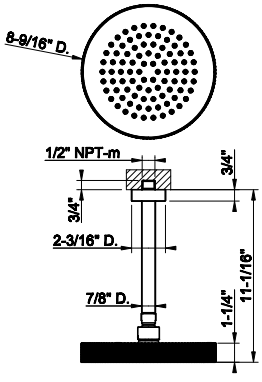

Ceiling -mounted shower head with arm DIAMANTATO.
- 1/2” connections.
- Projection from ceiling 11-1/16”
- Max flow rate 1.75 GPM



031	Chrome	2.363	708	Copper Br. PVD	3.732
149	Finox Br. Nickel	3.188	735	Warm Bronze PVD	3.495
299	Matte Black	3.188	726	Warm Bronze Br. PVD	3.732
720	Nickel PVD	3.495	710	Brass PVD	3.495
706	Black Metal PVD	3.495	727	Brass Br. PVD	3.732
707	Black Metal Br. PVD	3.732	187	Aged Bronze	3.732
030	Copper PVD	3.495	713	Antique Brass	3.732



63552

Ceiling -mounted shower head with arm RIGATO.
- 1/2” connections.
- Projection from ceiling 11-1/16”
- Max flow rate 1.75 GPM

031	Chrome	2.363	708	Copper Br. PVD	3.732
149	Finox Br. Nickel	3.188	735	Warm Bronze PVD	3.495
299	Matte Black	3.188	726	Warm Bronze Br. PVD	3.732
720	Nickel PVD	3.495	710	Brass PVD	3.495
706	Black Metal PVD	3.495	727	Brass Br. PVD	3.732
707	Black Metal Br. PVD	3.732	187	Aged Bronze	3.732
030	Copper PVD	3.495	713	Antique Brass	3.732

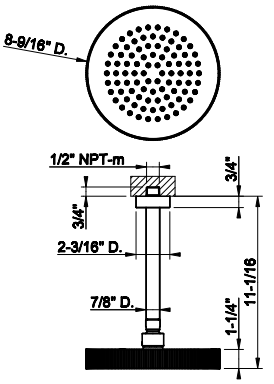

63354

Wall-mounted adjustable shower head with arm DIAMANTATO.
- 1/2” connections
- Projection from wall to center 9-5/16”
- Total projection 10-15/16”
- Max flow rate 1.75 gpm

031	Chrome	1.759	735	Warm Bronze PVD	2.604
149	Finox Br. Nickel	2.375	726	Warm Bronze Br. PVD	2.779
299	Matte Black	2.375	710	Brass PVD	2.604
720	Nickel PVD	2.604	727	Brass Br. PVD	2.779
706	Black Metal PVD	2.604	845	Dark Bronze	2.779
707	Black Metal Br. PVD	2.779	187	Aged Bronze	2.779
030	Copper PVD	2.604	713	Antique Brass	2.779
708	Copper Br. PVD	2.779			



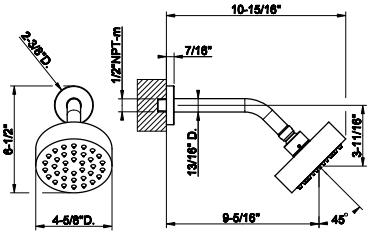

63554

Wall-mounted anti-limescale showerhead. RIGATO
- 1/2” connections
- Projection from wall to center 9-5/16”
- Total projection 10-15/16”
- Max flow rate 1.75 GPM

031	Chrome	1.759	735	Warm Bronze PVD	2.604
149	Finox Br. Nickel	2.375	726	Warm Bronze Br. PVD	2.779
299	Matte Black	2.375	710	Brass PVD	2.604
720	Nickel PVD	2.604	727	Brass Br. PVD	2.779
706	Black Metal PVD	2.604	845	Dark Bronze	2.779
707	Black Metal Br. PVD	2.779	187	Aged Bronze	2.779
030	Copper PVD	2.604	713	Antique Brass	2.779
708	Copper Br. PVD	2.779			



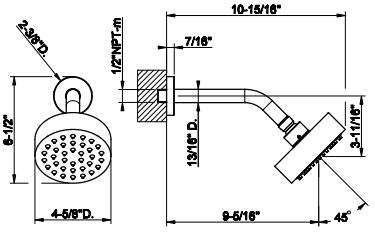

63356

Wall-mounted adjustable multi-function shower head with arm DIAMANTATO.
- 1/2” connections
- Projection from wall to center 9-11/16”
- Total projection 11-3/16”
- Max flow rate 1.75 gpm

031	Chrome	2.111	735	Warm Bronze PVD	3.124
149	Finox Br. Nickel	2.850	726	Warm Bronze Br. PVD	3.334
299	Matte Black	2.850	710	Brass PVD	3.124
720	Nickel PVD	3.124	727	Brass Br. PVD	3.334
706	Black Metal PVD	3.124	845	Dark Bronze	3.334
707	Black Metal Br. PVD	3.334	187	Aged Bronze	3.334
030	Copper PVD	3.124	713	Antique Brass	3.334
708	Copper Br. PVD	3.334			



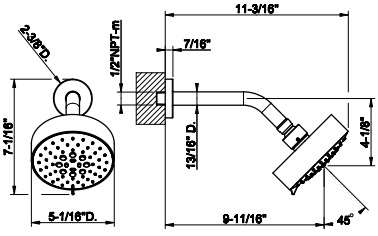

INVERSO BATH&SHOWER

63556

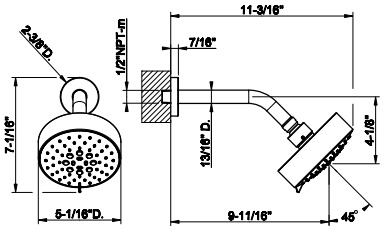

Multifunctional adjustable wall-mounted anti-limescale showerhead. RIGATO
- 1/2” connections
- Projection from wall to center 9-11/16”
- Total projection 11-3/16”
- Max flow rate 1.75 GPM



031	Chrome	2.111	735	Warm Bronze PVD	3.124
149	Finox Br. Nickel	2.850	726	Warm Bronze Br. PVD	3.334
299	Matte Black	2.850	710	Brass PVD	3.124
720	Nickel PVD	3.124	727	Brass Br. PVD	3.334
706	Black Metal PVD	3.124	845	Dark Bronze	3.334
707	Black Metal Br. PVD	3.334	187	Aged Bronze	3.334
030	Copper PVD	3.124	713	Antique Brass	3.334
708	Copper Br. PVD	3.334			

59158

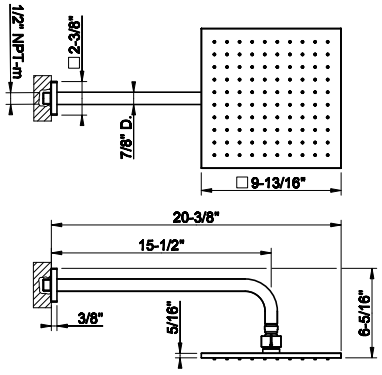

Wall-mounted adjustable shower head with arm.
- 1/2” connections.
- Projection from wall to center 15-1/2”
- Total projection 20-3/8”
- Max flow rate 1.75 GPM



031	Chrome	1.274	726	Warm Bronze Br. PVD	2.011
149	Finox Br. Nickel	1.719	710	Brass PVD	1.884
299	Matte Black	1.719	727	Brass Br. PVD	2.011
720	Nickel PVD	1.884	246	Gold PVD	2.141
706	Black Metal PVD	1.884	716	Gold Br. PVD	2.141
707	Black Metal Br. PVD	2.011	845	Dark Bronze	2.011
030	Copper PVD	1.884	187	Aged Bronze	2.011
708	Copper Br. PVD	2.011	713	Antique Brass	2.011
735	Warm Bronze PVD	1.884	279	Matte White	1.719

59155

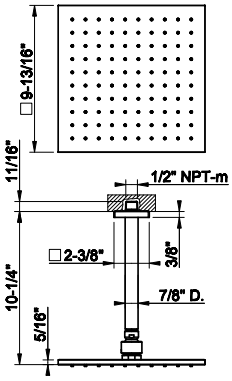

Ceiling-mounted adjustable shower head with arm.
- 1/2” connections.
- Projection from ceiling 10-1/4”
- Max flow rate 1.75 GPM



031	Chrome	1.142	726	Warm Bronze Br. PVD	1.806
149	Finox Br. Nickel	1.541	710	Brass PVD	1.691
299	Matte Black	1.541	727	Brass Br. PVD	1.806
720	Nickel PVD	1.691	246	Gold PVD	1.919
706	Black Metal PVD	1.691	716	Gold Br. PVD	1.919
707	Black Metal Br. PVD	1.806	845	Dark Bronze	1.806
030	Copper PVD	1.691	187	Aged Bronze	1.806
708	Copper Br. PVD	1.806	713	Antique Brass	1.806
735	Warm Bronze PVD	1.691	279	Matte White	1.541

15185

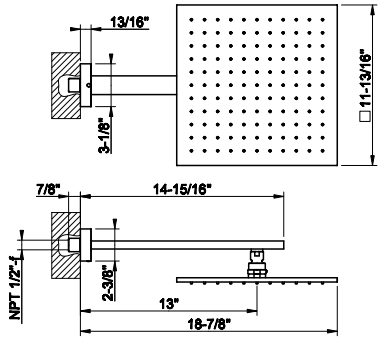

Wall-mounted adjustable and antilimestone showerhead 11-13/16” X 11-13/16”
- 1/2” connections
- Projection from wall 18-7/8”
- Max flow rate 1.75 GPM



031	Chrome	3.187	726	Warm Bronze Br. PVD	5.034
149	Finox Br. Nickel	4.301	710	Brass PVD	4.718
299	Matte Black	4.301	727	Brass Br. PVD	5.034
720	Nickel PVD	4.718	246	Gold PVD	5.355
706	Black Metal PVD	4.718	716	Gold Br. PVD	5.355
707	Black Metal Br. PVD	5.034	845	Dark Bronze	5.034
030	Copper PVD	4.718	187	Aged Bronze	5.034
708	Copper Br. PVD	5.034	713	Antique Brass	5.034
735	Warm Bronze PVD	4.718	279	Matte White	4.301



15186

Ceiling-mounted adjustable and antilimestone showerhead 11-13/16" X 11-13/16"
- 1/2" connections
- Projection from ceiling 10-3/8"
- Max flow rate 1.75 GPM

031	Chrome	3.030	726	Warm Bronze Br. PVD	4.787
149	Finox Br. Nickel	4.089	710	Brass PVD	4.483
299	Matte Black	4.089	727	Brass Br. PVD	4.787
720	Nickel PVD	4.483	246	Gold PVD	5.091
706	Black Metal PVD	4.483	716	Gold Br. PVD	5.091
707	Black Metal Br. PVD	4.787	845	Dark Bronze	4.787
030	Copper PVD	4.483	187	Aged Bronze	4.787
708	Copper Br. PVD	4.787	713	Antique Brass	4.787
735	Warm Bronze PVD	4.483	279	Matte White	4.089

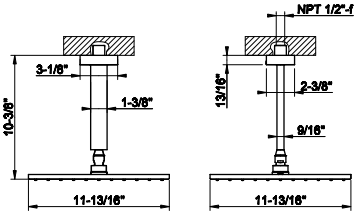

32975

Rectangular body spray
- 1/2" connections
- Max flow rate 1 GPM at 60 PSI

031	Chrome	1.316	708	Copper Br. PVD	2.079
149	Finox Br. Nickel	1.777	735	Warm Bronze PVD	1.947
299	Matte Black	1.777	726	Warm Bronze Br. PVD	2.079
720	Nickel PVD	1.947	710	Brass PVD	1.947
706	Black Metal PVD	1.947	727	Brass Br. PVD	2.079
707	Black Metal Br. PVD	2.079	713	Antique Brass	2.079
030	Copper PVD	1.947	279	Matte White	1.777

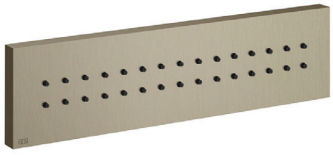

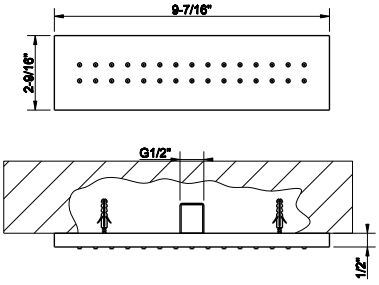

32973

Square body spray
- 1/2" connections
- Max flow rate 1 GPM at 60 PSI

031	Chrome	552	708	Copper Br. PVD	873
149	Finox Br. Nickel	746	735	Warm Bronze PVD	818
299	Matte Black	746	726	Warm Bronze Br. PVD	873
720	Nickel PVD	818	710	Brass PVD	818
706	Black Metal PVD	818	727	Brass Br. PVD	873
707	Black Metal Br. PVD	873	713	Antique Brass	873
030	Copper PVD	818	279	Matte White	746



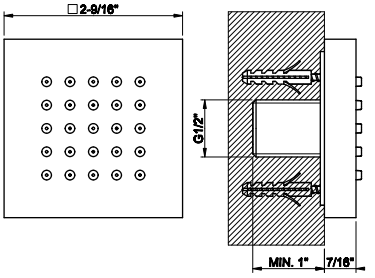

INVERSO BATH&SHOWER

32987+32984

32987

In-wall rough valve for pivotable body spray 32984

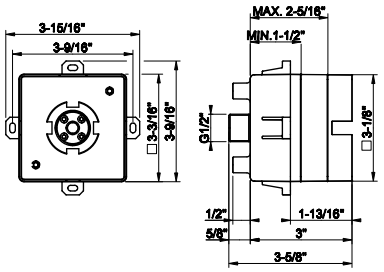



031	Chrome	406			

32984

TRIM PARTS ONLY Square in-wall pivotable body spray
- 1/2” connections
- Requires in-wall rough valve 32987
- Max flow rate 1 GPM at 60 PSI

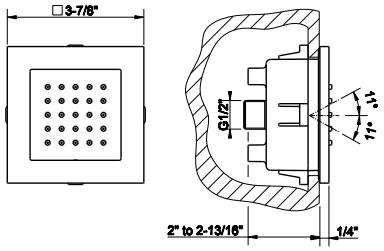

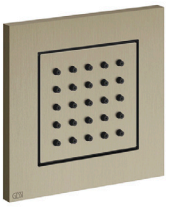

031	Chrome	957	708	Copper Br. PVD	1.513
149	Finox Br. Nickel	1.293	735	Warm Bronze PVD	1.417
299	Matte Black	1.293	726	Warm Bronze Br. PVD	1.513
720	Nickel PVD	1.417	710	Brass PVD	1.417
706	Black Metal PVD	1.417	727	Brass Br. PVD	1.513
707	Black Metal Br. PVD	1.513	713	Antique Brass	1.513
030	Copper PVD	1.417	279	Matte White	1.293

26672

Pivotable body spray
- 1/2” connection
- Max flow rate .65 GPM at 60 PSI

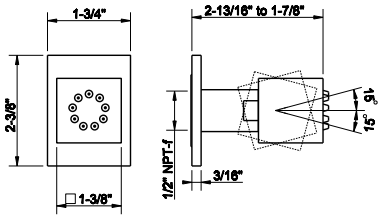

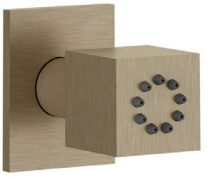

031	Chrome	435	708	Copper Br. PVD	688
149	Finox Br. Nickel	589	735	Warm Bronze PVD	644
299	Matte Black	589	726	Warm Bronze Br. PVD	688
720	Nickel PVD	644	710	Brass PVD	644
706	Black Metal PVD	644	727	Brass Br. PVD	688
707	Black Metal Br. PVD	688	713	Antique Brass	688
030	Copper PVD	644	279	Matte White	589

20295

Wall-fixing cascade spout with separate control (not included).
- 1/2” connections
- Flow rate 4.8 GPM at 60 PSI

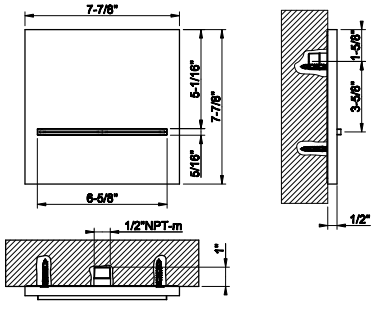



239	Steel Br.	1.949	726	Warm Bronze Br. PVD	3.077
238	Mirror Steel	1.949	710	Brass PVD	2.884
299	Matte Black	2.631	727	Brass Br. PVD	3.077
720	Nickel PVD	2.884	246	Gold PVD	3.273
706	Black Metal PVD	2.884	716	Gold Br. PVD	3.273
707	Black Metal Br. PVD	3.077	845	Dark Bronze	3.077
030	Copper PVD	2.884	187	Aged Bronze	3.077
708	Copper Br. PVD	3.077	713	Antique Brass	3.077
735	Warm Bronze PVD	2.884	279	Matte White	2.631



73523

Handshower set
- Fixed hook
- Wall elbow
- 59-1/16” hose length
- Max flow rate 1.75 GPM

031	Chrome	910	708	Copper Br. PVD	1.438
149	Finox Br. Nickel	1.231	735	Warm Bronze PVD	1.348
299	Matte Black	1.231	726	Warm Bronze Br. PVD	1.438
706	Black Metal PVD	1.348	710	Brass PVD	1.348
707	Black Metal Br. PVD	1.438	727	Brass Br. PVD	1.438
030	Copper PVD	1.348			

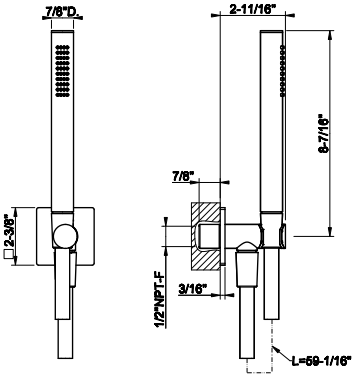



63099

Magnetic anti-limestone handshower set
- Fixed hook
- Wall elbow
- 59” Cromalux flex hose
- Max flow rate 1.75 GPM

031	Chrome	1.213	726	Warm Bronze Br. PVD	1.916
149	Finox Br. Nickel	1.638	710	Brass PVD	1.794
299	Matte Black	1.638	727	Brass Br. PVD	1.916
720	Nickel PVD	1.794	246	Gold PVD	2.037
706	Black Metal PVD	1.794	716	Gold Br. PVD	2.037
707	Black Metal Br. PVD	1.916	845	Dark Bronze	1.916
030	Copper PVD	1.794	187	Aged Bronze	1.916
708	Copper Br. PVD	1.916	713	Antique Brass	1.916
735	Warm Bronze PVD	1.794			

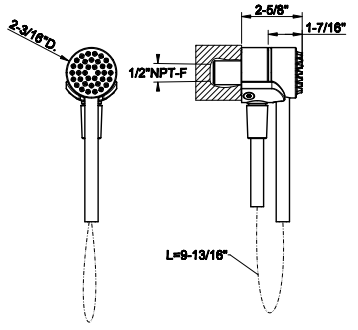



73061

Wall elbow with built-in water intake and fixed hook
- Connection 1/2” NPT-F

031	Chrome	513	708	Copper Br. PVD	814
149	Finox Br. Nickel	696	735	Warm Bronze PVD	761
299	Matte Black	696	726	Warm Bronze Br. PVD	814
706	Black Metal PVD	761	710	Brass PVD	761
707	Black Metal Br. PVD	814	727	Brass Br. PVD	814
030	Copper PVD	761			

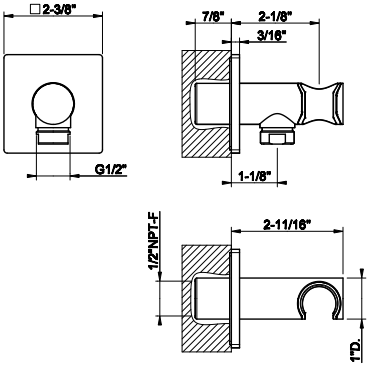



73069

Wall elbow with backplate
- Connection 1/2” NPT-F

031	Chrome	368	708	Copper Br. PVD	586
149	Finox Br. Nickel	498	735	Warm Bronze PVD	548
299	Matte Black	498	726	Warm Bronze Br. PVD	586
706	Black Metal PVD	548	710	Brass PVD	548
707	Black Metal Br. PVD	586	727	Brass Br. PVD	586
030	Copper PVD	548			

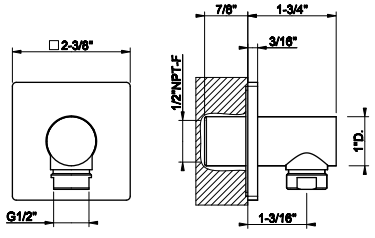

INVERSO BATH&SHOWER

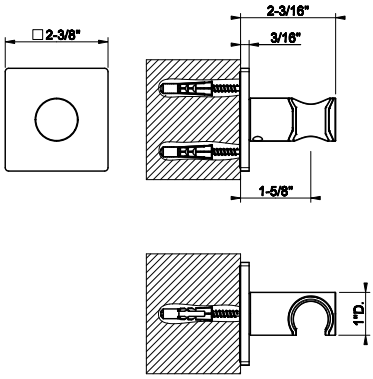

73057

Fixing handshower hook.



031	Chrome	296	708	Copper Br. PVD	466
149	Finox Br. Nickel	401	735	Warm Bronze PVD	439
299	Matte Black	401	726	Warm Bronze Br. PVD	466
706	Black Metal PVD	439	710	Brass PVD	439
707	Black Metal Br. PVD	466	727	Brass Br. PVD	466
030	Copper PVD	439			

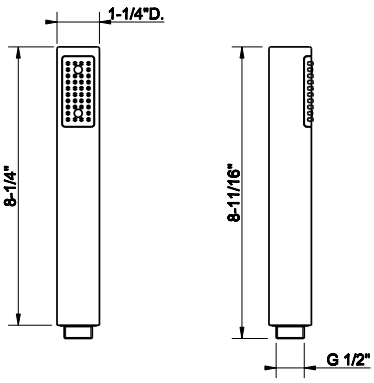

14372

Handshower
- Max flow rate 1.75 GPM



031	Chrome	134	726	Warm Bronze Br. PVD	394
149	Finox Br. Nickel	317	710	Brass PVD	371
299	Matte Black	225	727	Brass Br. PVD	394
720	Nickel PVD	371	246	Gold PVD	418
706	Black Metal PVD	371	716	Gold Br. PVD	418
707	Black Metal Br. PVD	394	845	Dark Bronze	394
030	Copper PVD	371	187	Aged Bronze	394
708	Copper Br. PVD	394	713	Antique Brass	394
735	Warm Bronze PVD	371	279	Matte White	317

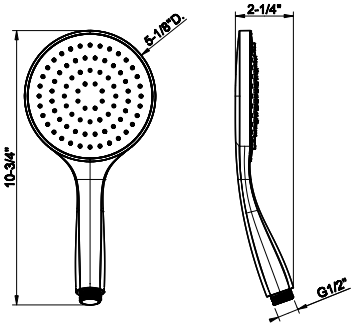

14370

Antilimestone handshower
- Single spray
- Max flow rate 1.75 GPM



031	Chrome	189	726	Warm Bronze Br. PVD	465
149	Finox Br. Nickel	377	710	Brass PVD	435
299	Matte Black	377	727	Brass Br. PVD	465
147	Chrome Br.	377	246	Gold PVD	493
720	Nickel PVD	435	716	Gold Br. PVD	493
706	Black Metal PVD	435	845	Dark Bronze	465
707	Black Metal Br. PVD	465	187	Aged Bronze	465
030	Copper PVD	435	713	Antique Brass	465
708	Copper Br. PVD	465	279	Matte White	377
735	Warm Bronze PVD	435			

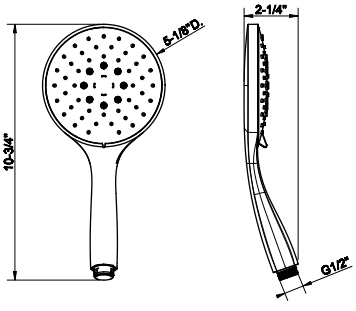

14376

Handshower with white insert
- 3-pattern spray
- Max flow rate 1.75 GPM



031	Chrome	390	726	Warm Bronze Br. PVD	656
149	Finox Br. Nickel	527	710	Brass PVD	616
299	Matte Black	527	727	Brass Br. PVD	656
147	Chrome Br.	527	246	Gold PVD	681
720	Nickel PVD	616	716	Gold Br. PVD	681
706	Black Metal PVD	616	845	Dark Bronze	656
707	Black Metal Br. PVD	656	187	Aged Bronze	656
030	Copper PVD	616	713	Antique Brass	656
708	Copper Br. PVD	656	279	Matte White	527
735	Warm Bronze PVD	616			



01637

59” flex hose

031	Chrome	134	726	Warm Bronze Br. PVD	214
149	Finox Br. Nickel	173	710	Brass PVD	203
299	Matte Black	173	727	Brass Br. PVD	214
147	Chrome Br.	173	246	Gold PVD	227
720	Nickel PVD	203	716	Gold Br. PVD	227
706	Black Metal PVD	203	845	Dark Bronze	214
707	Black Metal Br. PVD	214	187	Aged Bronze	214
030	Copper PVD	203	713	Antique Brass	214
708	Copper Br. PVD	214	279	Matte White	173
735	Warm Bronze PVD	203			

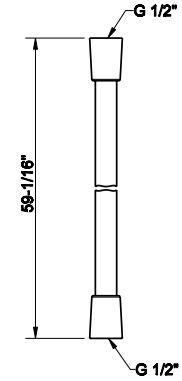



54137

59” black flex hose with options to change the metal ends with desired finish

031	Chrome	183	735	Warm Bronze PVD	290
239	Steel Br.	179	726	Warm Bronze Br. PVD	283
299	Matte Black	241	710	Brass PVD	290
720	Nickel PVD	248	727	Brass Br. PVD	283
706	Black Metal PVD	290	845	Dark Bronze	248
707	Black Metal Br. PVD	283	187	Aged Bronze	248
030	Copper PVD	290	713	Antique Brass	248
708	Copper Br. PVD	283			

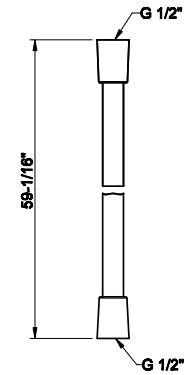



01724

Metal flexible hose, 59” length, 1/2” connector.

031	Chrome	196	726	Warm Bronze Br. PVD	308
149	Finox Br. Nickel	260	710	Brass PVD	288
299	Matte Black	260	727	Brass Br. PVD	308
147	Chrome Br.	260	246	Gold PVD	288
720	Nickel PVD	308	716	Gold Br. PVD	341
706	Black Metal PVD	288	845	Dark Bronze	308
707	Black Metal Br. PVD	308	187	Aged Bronze	308
030	Copper PVD	288	713	Antique Brass	308
708	Copper Br. PVD	308	279	Matte White	259
735	Warm Bronze PVD	288			

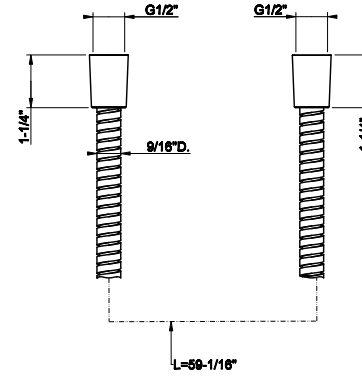



INVERSO
ACCESSORIES

20801

Wall-mounted soap dish, white



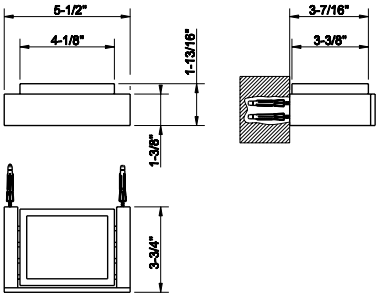

031	Chrome	663	708	Copper Br. PVD	1.048
149	Finox Br. Nickel	895	735	Warm Bronze PVD	981
299	Matte Black	895	726	Warm Bronze Br. PVD	1.048
720	Nickel PVD	981	710	Brass PVD	981
706	Black Metal PVD	981	727	Brass Br. PVD	1.048
707	Black Metal Br. PVD	1.048	187	Aged Bronze	1.048
030	Copper PVD	981	713	Antique Brass	1.048

20802

Wall-mounted soap dish, black



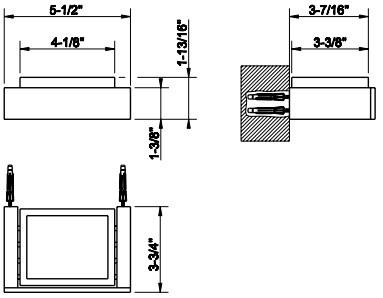

031	Chrome	663	708	Copper Br. PVD	1.048
149	Finox Br. Nickel	895	735	Warm Bronze PVD	981
299	Matte Black	895	726	Warm Bronze Br. PVD	1.048
720	Nickel PVD	981	710	Brass PVD	981
706	Black Metal PVD	981	727	Brass Br. PVD	1.048
707	Black Metal Br. PVD	1.048	187	Aged Bronze	1.048
030	Copper PVD	981	713	Antique Brass	1.048

20807

Wall-mounted holder, white



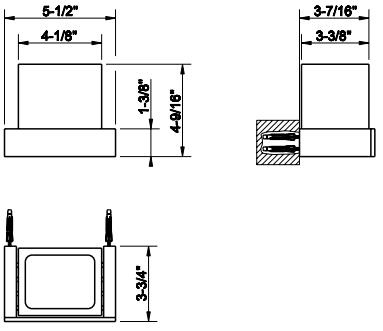

031	Chrome	736	708	Copper Br. PVD	1.164
149	Finox Br. Nickel	995	735	Warm Bronze PVD	1.090
299	Matte Black	995	726	Warm Bronze Br. PVD	1.164
720	Nickel PVD	1.090	710	Brass PVD	1.090
706	Black Metal PVD	1.090	727	Brass Br. PVD	1.164
707	Black Metal Br. PVD	1.164	187	Aged Bronze	1.164
030	Copper PVD	1.090	713	Antique Brass	1.164

20808

Wall-mounted holder, black



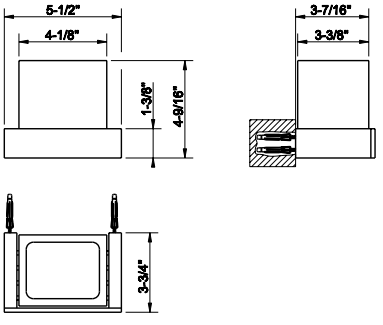

031	Chrome	736	708	Copper Br. PVD	1.164
149	Finox Br. Nickel	995	735	Warm Bronze PVD	1.090
299	Matte Black	995	726	Warm Bronze Br. PVD	1.164
720	Nickel PVD	1.090	710	Brass PVD	1.090
706	Black Metal PVD	1.090	727	Brass Br. PVD	1.164
707	Black Metal Br. PVD	1.164	187	Aged Bronze	1.164
030	Copper PVD	1.090	713	Antique Brass	1.164

INVERSO ACCESSORIES

20813

Wall-mounted liquid soap dispenser , white

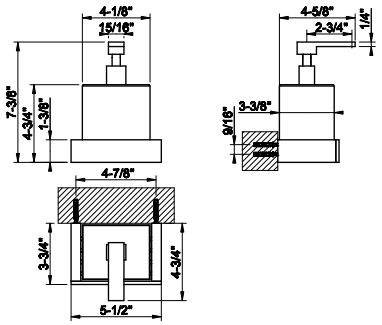



031	Chrome	994	708	Copper Br. PVD	1.570
149	Finox Br. Nickel	1.341	735	Warm Bronze PVD	1.470
299	Matte Black	1.341	726	Warm Bronze Br. PVD	1.570
720	Nickel PVD	1.470	710	Brass PVD	1.470
706	Black Metal PVD	1.470	727	Brass Br. PVD	1.570
707	Black Metal Br. PVD	1.570	187	Aged Bronze	1.570
030	Copper PVD	1.470	713	Antique Brass	1.570

20814

Wall-mounted liquid soap dispenser - black

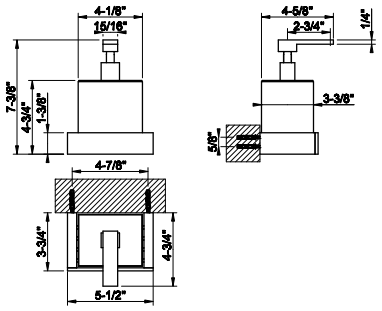



031	Chrome	994	708	Copper Br. PVD	1.570
149	Finox Br. Nickel	1.341	735	Warm Bronze PVD	1.470
299	Matte Black	1.341	726	Warm Bronze Br. PVD	1.570
720	Nickel PVD	1.470	710	Brass PVD	1.470
706	Black Metal PVD	1.470	727	Brass Br. PVD	1.570
707	Black Metal Br. PVD	1.570	187	Aged Bronze	1.570
030	Copper PVD	1.470	713	Antique Brass	1.570

20819

White wall-mounted brush holder

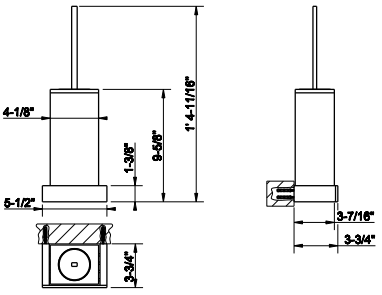



031	Chrome	1.064	708	Copper Br. PVD	1.676
149	Finox Br. Nickel	1.376	735	Warm Bronze PVD	1.570
299	Matte Black	1.324	726	Warm Bronze Br. PVD	1.676
720	Nickel PVD	1.570	710	Brass PVD	1.570
706	Black Metal PVD	1.570	727	Brass Br. PVD	1.676
707	Black Metal Br. PVD	1.676	187	Aged Bronze	1.683
030	Copper PVD	1.570	713	Antique Brass	1.683

20820

Black wall-mounted brush holder

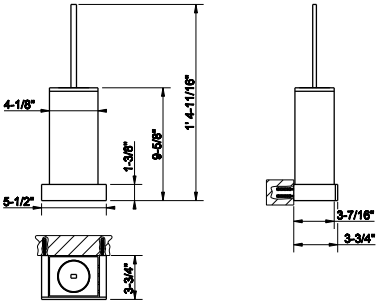



031	Chrome	1.064	708	Copper Br. PVD	1.676
149	Finox Br. Nickel	1.376	735	Warm Bronze PVD	1.570
299	Matte Black	1.324	726	Warm Bronze Br. PVD	1.676
720	Nickel PVD	1.570	710	Brass PVD	1.570
706	Black Metal PVD	1.570	727	Brass Br. PVD	1.676
707	Black Metal Br. PVD	1.676	187	Aged Bronze	1.683
030	Copper PVD	1.570	713	Antique Brass	1.683

20825

White standing soap holder



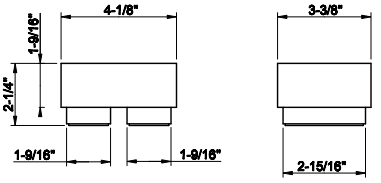

031	Chrome	408	708	Copper Br. PVD	648
149	Finox Br. Nickel	488	735	Warm Bronze PVD	605
299	Matte Black	493	726	Warm Bronze Br. PVD	648
720	Nickel PVD	605	710	Brass PVD	605
706	Black Metal PVD	605	727	Brass Br. PVD	648
707	Black Metal Br. PVD	648	187	Aged Bronze	644
030	Copper PVD	605	713	Antique Brass	644

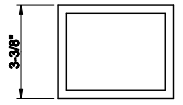

20826

Black standing soap holder



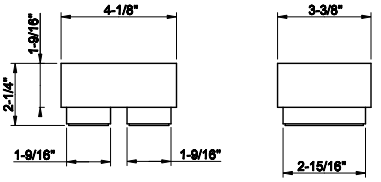

031	Chrome	408	708	Copper Br. PVD	648
149	Finox Br. Nickel	488	735	Warm Bronze PVD	605
299	Matte Black	493	726	Warm Bronze Br. PVD	648
720	Nickel PVD	605	710	Brass PVD	605
706	Black Metal PVD	605	727	Brass Br. PVD	648
707	Black Metal Br. PVD	648	187	Aged Bronze	644
030	Copper PVD	605	713	Antique Brass	644

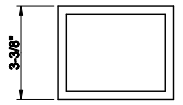

20831

Standing tumbler holder white



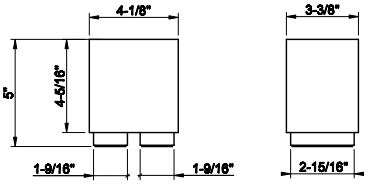

031	Chrome	408	708	Copper Br. PVD	742
149	Finox Br. Nickel	488	735	Warm Bronze PVD	605
299	Matte Black	493	726	Warm Bronze Br. PVD	742
720	Nickel PVD	695	710	Brass PVD	605
706	Black Metal PVD	605	727	Brass Br. PVD	742
707	Black Metal Br. PVD	742	187	Aged Bronze	644
030	Copper PVD	605	713	Antique Brass	644

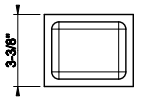

20832

Standing tumbler holder black



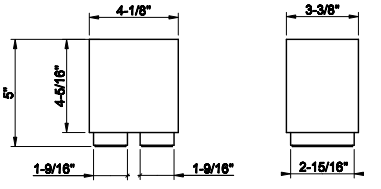

031	Chrome	408	708	Copper Br. PVD	648
149	Finox Br. Nickel	488	735	Warm Bronze PVD	605
299	Matte Black	493	726	Warm Bronze Br. PVD	648
720	Nickel PVD	605	710	Brass PVD	605
706	Black Metal PVD	605	727	Brass Br. PVD	648
707	Black Metal Br. PVD	648	187	Aged Bronze	644
030	Copper PVD	605	713	Antique Brass	644

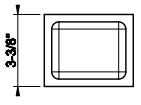

INVERSO ACCESSORIES

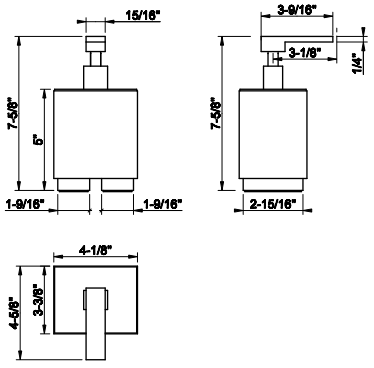

20837

Standing Soap dispenser white



031	Chrome	704	708	Copper Br. PVD	1.114
149	Finox Br. Nickel	845	735	Warm Bronze PVD	1.039
299	Matte Black	849	726	Warm Bronze Br. PVD	1.114
720	Nickel PVD	1.039	710	Brass PVD	1.039
706	Black Metal PVD	1.039	727	Brass Br. PVD	1.114
707	Black Metal Br. PVD	1.114	187	Aged Bronze	1.114
030	Copper PVD	1.039	713	Antique Brass	1.114

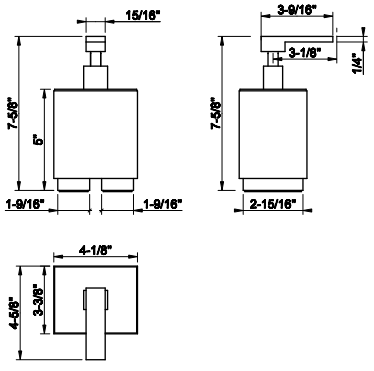

20838

Black standing Soap dispenser



031	Chrome	704	708	Copper Br. PVD	1.282
149	Finox Br. Nickel	845	735	Warm Bronze PVD	1.039
299	Matte Black	849	726	Warm Bronze Br. PVD	1.282
720	Nickel PVD	1.196	710	Brass PVD	1.039
706	Black Metal PVD	1.039	727	Brass Br. PVD	1.282
707	Black Metal Br. PVD	1.282	187	Aged Bronze	1.114
030	Copper PVD	1.039	713	Antique Brass	1.114

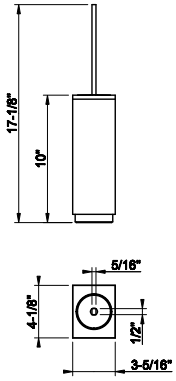

20843

White standing brush holder



031	Chrome	732	708	Copper Br. PVD	1.154
149	Finox Br. Nickel	957	735	Warm Bronze PVD	1.081
299	Matte Black	922	726	Warm Bronze Br. PVD	1.154
720	Nickel PVD	1.081	710	Brass PVD	1.081
706	Black Metal PVD	1.081	727	Brass Br. PVD	1.154
707	Black Metal Br. PVD	1.154	187	Aged Bronze	1.154
030	Copper PVD	1.081	713	Antique Brass	1.154

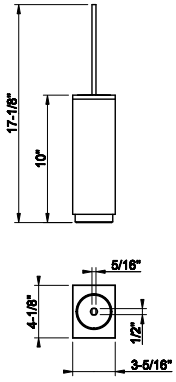

20844

Black standing brush holder



031	Chrome	732	708	Copper Br. PVD	1.154
149	Finox Br. Nickel	957	735	Warm Bronze PVD	1.081
299	Matte Black	922	726	Warm Bronze Br. PVD	1.154
720	Nickel PVD	1.081	710	Brass PVD	1.081
706	Black Metal PVD	1.081	727	Brass Br. PVD	1.154
707	Black Metal Br. PVD	1.154	187	Aged Bronze	1.156
030	Copper PVD	1.081	713	Antique Brass	1.156

20849

Wall-mounted tissue holder with cover



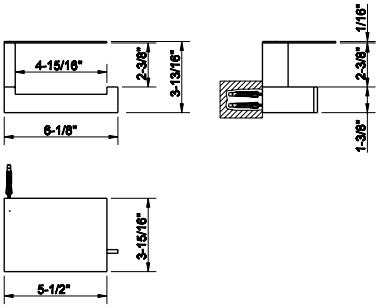

031	Chrome	728	708	Copper Br. PVD	1.150
149	Finox Br. Nickel	984	735	Warm Bronze PVD	1.078
299	Matte Black	984	726	Warm Bronze Br. PVD	1.150
720	Nickel PVD	1.078	710	Brass PVD	1.078
706	Black Metal PVD	1.078	727	Brass Br. PVD	1.150
707	Black Metal Br. PVD	1.150	187	Aged Bronze	1.150
030	Copper PVD	1.078	713	Antique Brass	1.150

20855

Wall-mounted tissue holder
• Vertical or horizontal application



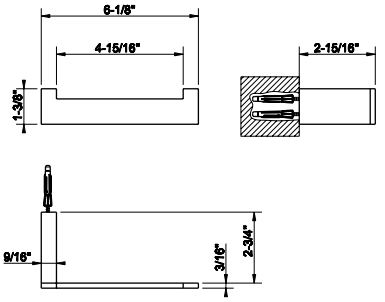

031	Chrome	435	708	Copper Br. PVD	688
149	Finox Br. Nickel	589	735	Warm Bronze PVD	644
299	Matte Black	589	726	Warm Bronze Br. PVD	688
720	Nickel PVD	644	710	Brass PVD	644
706	Black Metal PVD	644	727	Brass Br. PVD	688
707	Black Metal Br. PVD	688	187	Aged Bronze	688
030	Copper PVD	644	713	Antique Brass	688

20867

Wall-mounted column with paper roll holder and white brush holder



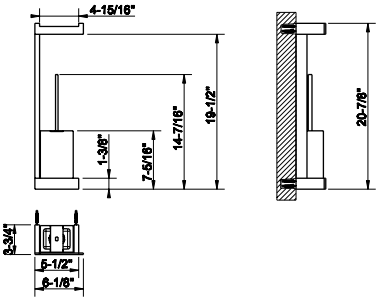

031	Chrome	1.438	708	Copper Br. PVD	2.272
149	Finox Br. Nickel	1.805	735	Warm Bronze PVD	2.127
299	Matte Black	1.817	726	Warm Bronze Br. PVD	2.272
720	Nickel PVD	2.127	710	Brass PVD	2.127
706	Black Metal PVD	2.127	727	Brass Br. PVD	2.272
707	Black Metal Br. PVD	2.272	187	Aged Bronze	2.274
030	Copper PVD	2.127	713	Antique Brass	2.274

20868

Wall-mounted column with paper roll holder and black brush holder



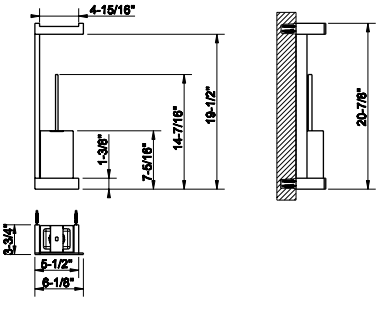

031	Chrome	1.438	708	Copper Br. PVD	2.272
149	Finox Br. Nickel	1.805	735	Warm Bronze PVD	2.127
299	Matte Black	1.817	726	Warm Bronze Br. PVD	2.272
720	Nickel PVD	2.127	710	Brass PVD	2.127
706	Black Metal PVD	2.127	727	Brass Br. PVD	2.272
707	Black Metal Br. PVD	2.272	187	Aged Bronze	2.274
030	Copper PVD	2.127	713	Antique Brass	2.274

INVERSO ACCESSORIES

20933

Standing set with paper roll holder and white brush holder

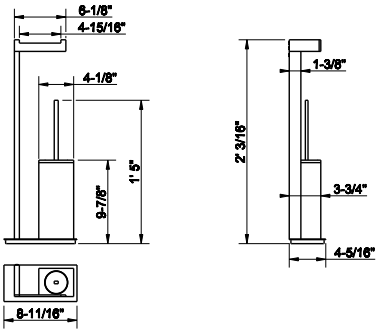

031	Chrome	1.478	708	Copper Br. PVD	2.334
149	Finox Br. Nickel	1.858	735	Warm Bronze PVD	2.184
299	Matte Black	1.868	726	Warm Bronze Br. PVD	2.334
720	Nickel PVD	2.184	710	Brass PVD	2.184
706	Black Metal PVD	2.184	727	Brass Br. PVD	2.334
707	Black Metal Br. PVD	2.334	187	Aged Bronze	2.337
030	Copper PVD	2.184	713	Antique Brass	2.337



20934

Standing set with paper roll holder and black brush holder

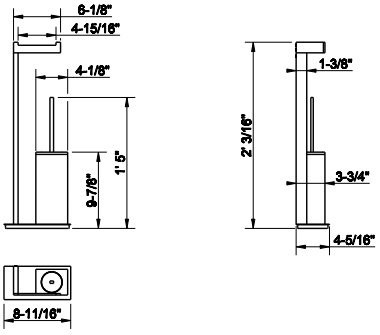

031	Chrome	1.478	708	Copper Br. PVD	2.334
149	Finox Br. Nickel	1.858	735	Warm Bronze PVD	2.184
299	Matte Black	1.868	726	Warm Bronze Br. PVD	2.334
720	Nickel PVD	2.184	710	Brass PVD	2.184
706	Black Metal PVD	2.184	727	Brass Br. PVD	2.334
707	Black Metal Br. PVD	2.334	187	Aged Bronze	2.337
030	Copper PVD	2.184	713	Antique Brass	2.337



20939

Freestanding towel rack

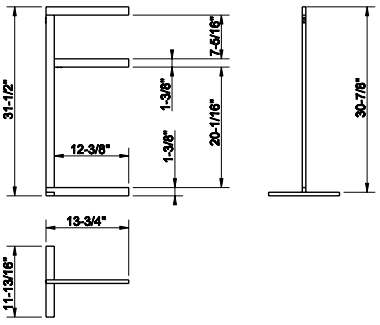

031	Chrome	2.243	708	Copper Br. PVD	3.542
149	Finox Br. Nickel	3.028	735	Warm Bronze PVD	3.319
299	Matte Black	3.028	726	Warm Bronze Br. PVD	3.542
720	Nickel PVD	3.319	710	Brass PVD	3.319
706	Black Metal PVD	3.319	727	Brass Br. PVD	3.542
707	Black Metal Br. PVD	3.542	187	Aged Bronze	3.542
030	Copper PVD	3.319	713	Antique Brass	3.542



20915

Wall-mounted double towel rail

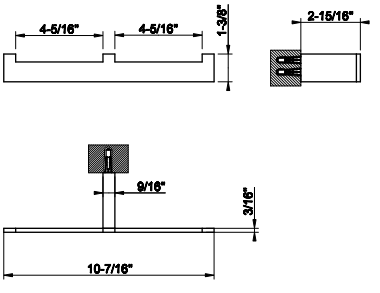

031	Chrome	644	708	Copper Br. PVD	1.017
149	Finox Br. Nickel	832	735	Warm Bronze PVD	954
299	Matte Black	837	726	Warm Bronze Br. PVD	1.017
720	Nickel PVD	954	710	Brass PVD	954
706	Black Metal PVD	954	727	Brass Br. PVD	1.017
707	Black Metal Br. PVD	1.017	187	Aged Bronze	1.019
030	Copper PVD	954	713	Antique Brass	1.019

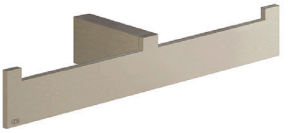

20897

12” towel bar



031	Chrome	582	708	Copper Br. PVD	918
149	Finox Br. Nickel	786	735	Warm Bronze PVD	862
299	Matte Black	786	726	Warm Bronze Br. PVD	918
720	Nickel PVD	862	710	Brass PVD	862
706	Black Metal PVD	862	727	Brass Br. PVD	918
707	Black Metal Br. PVD	918	187	Aged Bronze	918
030	Copper PVD	862	713	Antique Brass	918

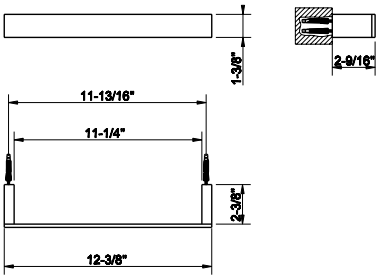

20900

18” towel bar



031	Chrome	627	708	Copper Br. PVD	992
149	Finox Br. Nickel	847	735	Warm Bronze PVD	929
299	Matte Black	847	726	Warm Bronze Br. PVD	992
720	Nickel PVD	929	710	Brass PVD	929
706	Black Metal PVD	929	727	Brass Br. PVD	992
707	Black Metal Br. PVD	992	187	Aged Bronze	992
030	Copper PVD	929	713	Antique Brass	992

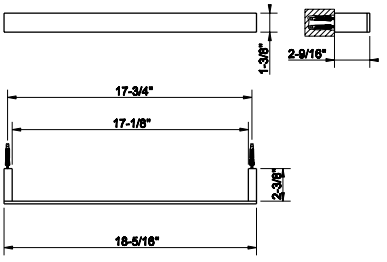

20903

24” towel bar



031	Chrome	728	708	Copper Br. PVD	1.150
149	Finox Br. Nickel	984	735	Warm Bronze PVD	1.078
299	Matte Black	984	726	Warm Bronze Br. PVD	1.150
720	Nickel PVD	1.078	710	Brass PVD	1.078
706	Black Metal PVD	1.078	727	Brass Br. PVD	1.150
707	Black Metal Br. PVD	1.150	187	Aged Bronze	1.150
030	Copper PVD	1.078	713	Antique Brass	1.150

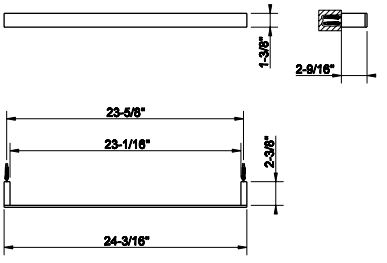

20909

Towel ring



031	Chrome	517	708	Copper Br. PVD	817
149	Finox Br. Nickel	699	735	Warm Bronze PVD	765
299	Matte Black	699	726	Warm Bronze Br. PVD	817
720	Nickel PVD	765	710	Brass PVD	765
706	Black Metal PVD	765	727	Brass Br. PVD	817
707	Black Metal Br. PVD	817	187	Aged Bronze	817
030	Copper PVD	765	713	Antique Brass	817

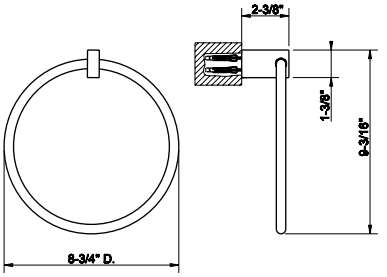

INVERSO ACCESSORIES

73521

Wall-mounted robe hook. RIGATO.

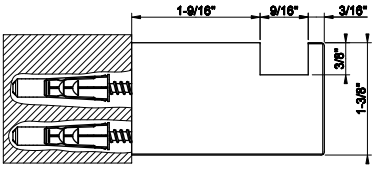

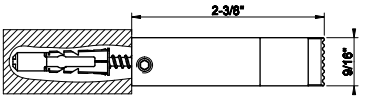

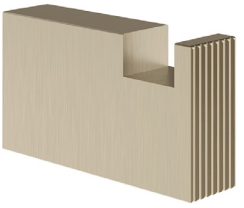

031	Chrome	345	708	Copper Br. PVD	546
149	Finox Br. Nickel	465	735	Warm Bronze PVD	510
299	Matte Black	465	726	Warm Bronze Br. PVD	546
706	Black Metal PVD	510	710	Brass PVD	510
707	Black Metal Br. PVD	546	727	Brass Br. PVD	546
030	Copper PVD	510			

73621

Wall-mounted robe hook. DIAMANTATO.

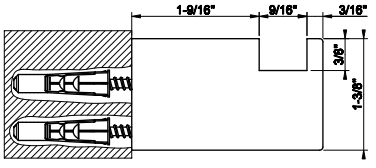

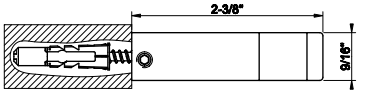

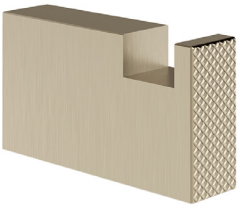

031	Chrome	345	708	Copper Br. PVD	546
149	Finox Br. Nickel	466	735	Warm Bronze PVD	511
299	Matte Black	466	726	Warm Bronze Br. PVD	546
706	Black Metal PVD	511	710	Brass PVD	511
707	Black Metal Br. PVD	546	727	Brass Br. PVD	546
030	Copper PVD	511			

20961

30 cm towel rail for glass fixing

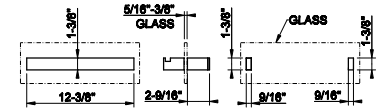

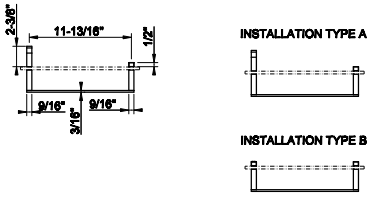

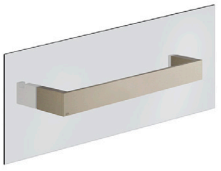

031	Chrome	1.340	708	Copper Br. PVD	2.118
149	Finox Br. Nickel	1.808	735	Warm Bronze PVD	1.980
299	Matte Black	1.808	726	Warm Bronze Br. PVD	2.118
720	Nickel PVD	1.980	710	Brass PVD	1.980
706	Black Metal PVD	1.980	727	Brass Br. PVD	2.118
707	Black Metal Br. PVD	2.118	187	Aged Bronze	2.118
030	Copper PVD	1.980	713	Antique Brass	2.118

20963

45 cm towel rail for glass fixing

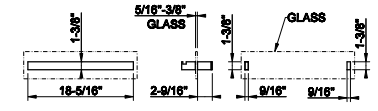

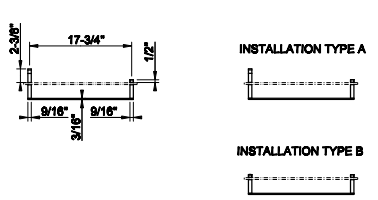

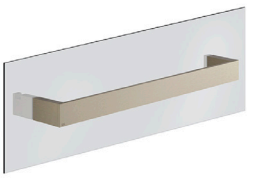

031	Chrome	1.430	708	Copper Br. PVD	2.258
149	Finox Br. Nickel	1.930	735	Warm Bronze PVD	2.118
299	Matte Black	1.930	726	Warm Bronze Br. PVD	2.258
720	Nickel PVD	2.118	710	Brass PVD	2.118
706	Black Metal PVD	2.118	727	Brass Br. PVD	2.258
707	Black Metal Br. PVD	2.258	187	Aged Bronze	2.258
030	Copper PVD	2.118	713	Antique Brass	2.258

20965

60 cm towel rail for glass fixing

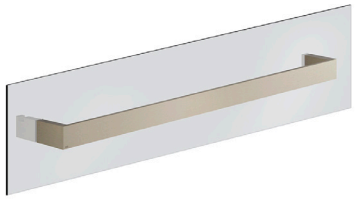

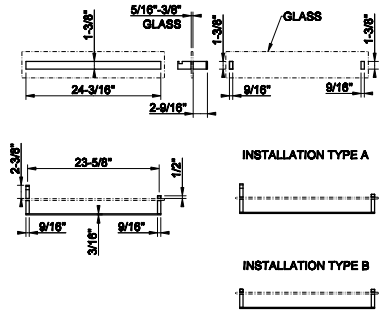

031	Chrome	1.508	708	Copper Br. PVD	2.383
149	Finox Br. Nickel	2.038	735	Warm Bronze PVD	2.233
299	Matte Black	2.038	726	Warm Bronze Br. PVD	2.383
720	Nickel PVD	2.233	710	Brass PVD	2.233
706	Black Metal PVD	2.233	727	Brass Br. PVD	2.383
707	Black Metal Br. PVD	2.383	187	Aged Bronze	2.383
030	Copper PVD	2.233	713	Antique Brass	2.383

20861

Corner shelf



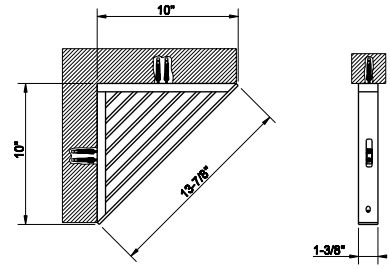

031	Chrome	957	708	Copper Br. PVD	1.513
149	Finox Br. Nickel	1.293	735	Warm Bronze PVD	1.417
299	Matte Black	1.293	726	Warm Bronze Br. PVD	1.513
720	Nickel PVD	1.417	710	Brass PVD	1.417
706	Black Metal PVD	1.417	727	Brass Br. PVD	1.513
707	Black Metal Br. PVD	1.513	187	Aged Bronze	1.513
030	Copper PVD	1.417	713	Antique Brass	1.513

20947

Shelf 30 cm



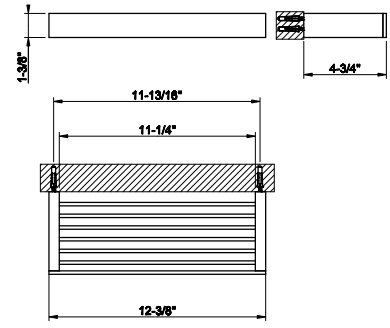

031	Chrome	810	708	Copper Br. PVD	1.282
149	Finox Br. Nickel	1.056	735	Warm Bronze PVD	1.196
299	Matte Black	1.056	726	Warm Bronze Br. PVD	1.282
720	Nickel PVD	1.196	710	Brass PVD	1.196
706	Black Metal PVD	1.196	727	Brass Br. PVD	1.282
707	Black Metal Br. PVD	1.282	187	Aged Bronze	1.279
030	Copper PVD	1.196	713	Antique Brass	1.279

20950

Shelf 60 cm

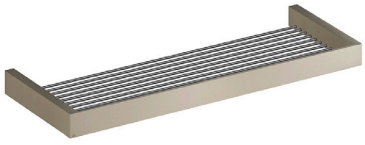

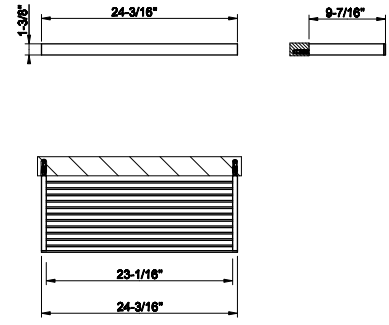

031	Chrome	1.483	708	Copper Br. PVD	2.342
149	Finox Br. Nickel	1.922	735	Warm Bronze PVD	2.192
299	Matte Black	2.005	726	Warm Bronze Br. PVD	2.342
720	Nickel PVD	2.192	710	Brass PVD	2.192
706	Black Metal PVD	2.192	727	Brass Br. PVD	2.342
707	Black Metal Br. PVD	2.342	187	Aged Bronze	2.344
030	Copper PVD	2.192	713	Antique Brass	2.344

INVERSO ACCESSORIES

20945

Shelf 60 cm

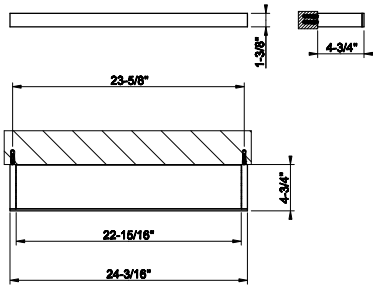



031	Chrome	1.126	708	Copper Br. PVD	1.778
149	Finox Br. Nickel	1.459	735	Warm Bronze PVD	1.666
299	Matte Black	1.468	726	Warm Bronze Br. PVD	1.778
720	Nickel PVD	1.666	710	Brass PVD	1.666
706	Black Metal PVD	1.666	727	Brass Br. PVD	1.778
707	Black Metal Br. PVD	1.778	187	Aged Bronze	1.781
030	Copper PVD	1.666	713	Antique Brass	1.781

20988

adjustable magnifying (2x) mirror

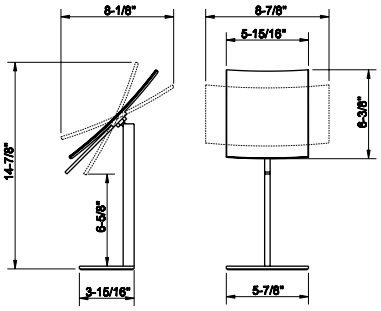



031	Chrome	957	708	Copper Br. PVD	1.513
149	Finox Br. Nickel	1.293	735	Warm Bronze PVD	1.417
299	Matte Black	1.293	726	Warm Bronze Br. PVD	1.513
720	Nickel PVD	1.417	710	Brass PVD	1.417
706	Black Metal PVD	1.417	727	Brass Br. PVD	1.513
707	Black Metal Br. PVD	1.513	187	Aged Bronze	1.513
030	Copper PVD	1.417	713	Antique Brass	1.513

20990

White waste-paper basket

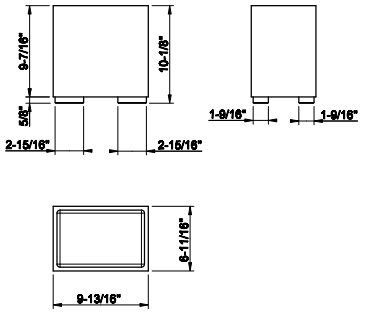



031	Chrome	1.111	708	Copper Br. PVD	1.751
149	Finox Br. Nickel	1.211	735	Warm Bronze PVD	1.640
299	Matte Black	1.207	726	Warm Bronze Br. PVD	1.751
720	Nickel PVD	1.640	710	Brass PVD	1.640
706	Black Metal PVD	1.640	727	Brass Br. PVD	1.751
707	Black Metal Br. PVD	1.751	187	Aged Bronze	1.758
030	Copper PVD	1.640	713	Antique Brass	1.758

20991

Black waste-paper basket

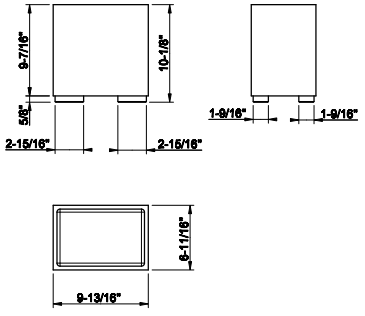



031	Chrome	1.111	708	Copper Br. PVD	1.751
149	Finox Br. Nickel	1.211	735	Warm Bronze PVD	1.640
299	Matte Black	1.207	726	Warm Bronze Br. PVD	1.751
720	Nickel PVD	1.640	710	Brass PVD	1.640
706	Black Metal PVD	1.640	727	Brass Br. PVD	1.751
707	Black Metal Br. PVD	1.751	187	Aged Bronze	1.758
030	Copper PVD	1.640	713	Antique Brass	1.758

58424

Safety grip-handle for bathtub and shower enclosure
• 18” length



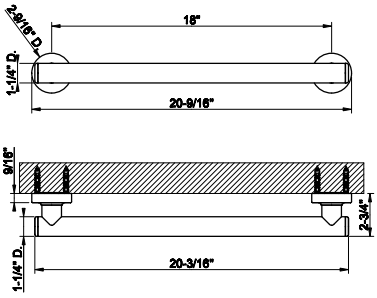

031	Chrome	1.932	708	Copper Br. PVD	3.056
149	Finox Br. Nickel	2.611	735	Warm Bronze PVD	2.862
299	Matte Black	2.611	726	Warm Bronze Br. PVD	3.054
720	Nickel PVD	2.862	710	Brass PVD	2.862
706	Black Metal PVD	2.862	727	Brass Br. PVD	3.056
707	Black Metal Br. PVD	3.056	187	Aged Bronze	3.056
030	Copper PVD	2.862	713	Antique Brass	3.056

58430

Safety grip-handle for bathtub and shower enclosure
• 24” length



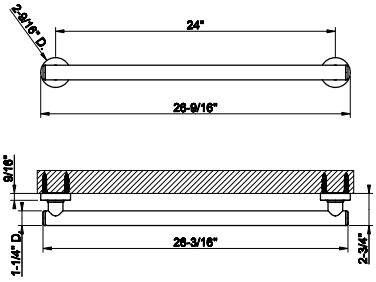

031	Chrome	1.967	708	Copper Br. PVD	3.108
149	Finox Br. Nickel	2.656	735	Warm Bronze PVD	2.911
299	Matte Black	2.656	726	Warm Bronze Br. PVD	3.108
720	Nickel PVD	2.911	710	Brass PVD	2.911
706	Black Metal PVD	2.911	727	Brass Br. PVD	3.108
707	Black Metal Br. PVD	3.108	187	Aged Bronze	3.108
030	Copper PVD	2.911	713	Antique Brass	3.108

58432

Safety grip-handle for bathtub and shower enclosure
• 36” length



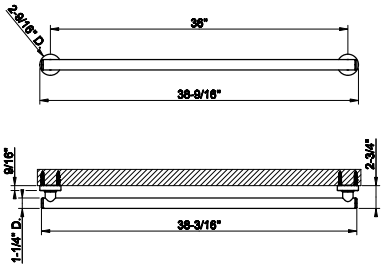

031	Chrome	2.165	708	Copper Br. PVD	3.419
149	Finox Br. Nickel	2.921	735	Warm Bronze PVD	3.203
299	Matte Black	2.921	726	Warm Bronze Br. PVD	3.419
720	Nickel PVD	3.203	710	Brass PVD	3.203
706	Black Metal PVD	3.203	727	Brass Br. PVD	3.419
707	Black Metal Br. PVD	3.419	187	Aged Bronze	3.419
030	Copper PVD	3.203	713	Antique Brass	3.419

20893

Safety grip-handle for bathtub and shower enclosure
• 18” length



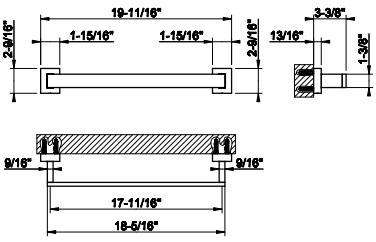

031	Chrome	927	708	Copper Br. PVD	1.464
149	Finox Br. Nickel	1.252	735	Warm Bronze PVD	1.371
299	Matte Black	1.252	726	Warm Bronze Br. PVD	1.464
720	Nickel PVD	1.371	710	Brass PVD	1.371
706	Black Metal PVD	1.371	727	Brass Br. PVD	1.464
707	Black Metal Br. PVD	1.464	187	Aged Bronze	1.464
030	Copper PVD	1.371	713	Antique Brass	1.464



INVERSO
TOTAL LOOK

54611



Flush Actuator Plate
•Stainless steel
•Compatible with GEBERIT models: 111.597.001, 111.902.005, 111.798.00.1, 111.335.00.5
•Without visible fixing system

031	Chrome	1.228	708	Copper Br. PVD	1.813
239	Steel Br.	1.228	735	Warm Bronze PVD	1.813
275	Matte Cipria	1.653	726	Warm Bronze Br. PVD	1.813
273	Matte Greige	1.653	710	Brass PVD	1.813
280	Matte Ocra	1.653	727	Brass Br. PVD	1.813
281	Matte Coral	1.653	246	Gold PVD	2.058
276	Matte Agave	1.653	716	Gold Br. PVD	2.058
299	Matte Black	1.653	845	Dark Bronze	1.813
720	Nickel PVD	1.813	187	Aged Bronze	1.813
706	Black Metal PVD	1.813	713	Antique Brass	1.813
707	Black Metal Br. PVD	1.813	279	Matte White	1.653
030	Copper PVD	1.813			

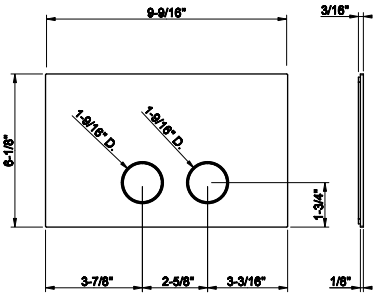

54671

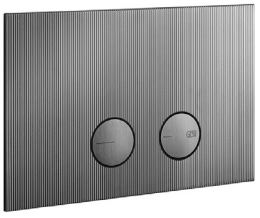

Flush Actuator Plate RIGATO
•Stainless steel
•Compatible with GEBERIT models: 111.597.001, 111.902.005, 111.798.00.1, 111.335.00.5
•Without visible fixing system

031	Chrome	2.585	708	Copper Br. PVD	4.082
149	Finox Br. Nickel	3.490	735	Warm Bronze PVD	3.824
299	Matte Black	3.490	726	Warm Bronze Br. PVD	4.082
720	Nickel PVD	3.824	710	Brass PVD	3.824
706	Black Metal PVD	3.824	727	Brass Br. PVD	4.082
707	Black Metal Br. PVD	4.082	187	Aged Bronze	4.082
030	Copper PVD	3.824	713	Antique Brass	4.082

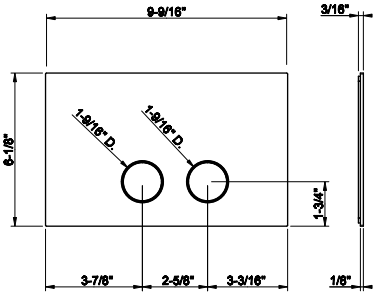

54681

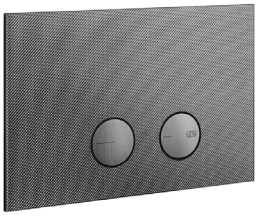

Flush Actuator Plate DIAMANTATO
•Stainless steel
•Compatible with GEBERIT models: 111.597.001, 111.902.005, 111.798.00.1, 111.335.00.5
•Without visible fixing system

031	Chrome	2.585	708	Copper Br. PVD	4.082
149	Finox Br. Nickel	3.490	735	Warm Bronze PVD	3.824
299	Matte Black	3.490	726	Warm Bronze Br. PVD	4.082
720	Nickel PVD	3.824	710	Brass PVD	3.824
706	Black Metal PVD	3.824	727	Brass Br. PVD	4.082
707	Black Metal Br. PVD	4.082	187	Aged Bronze	4.082
030	Copper PVD	3.824	713	Antique Brass	4.082

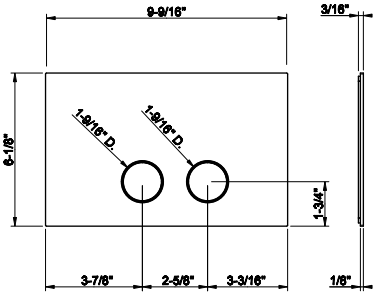

54601



Counter washbasin In stainless steel, without overflow waste. Without basin waste. It can be combined with waste 54597.

239	Steel Br.	2.449	708	Copper Br. PVD	6.986
299	Matte Black	4.431	726	Warm Bronze Br. PVD	6.986
707	Black Metal Br. PVD	6.986	727	Brass Br. PVD	6.986

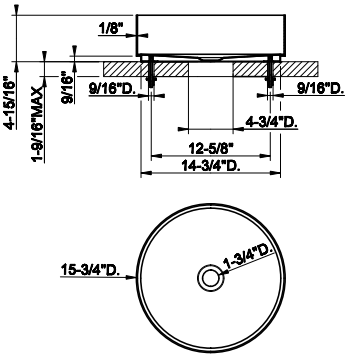

INVERSO TOTAL LOOK

01578

Undermounted washbasin brackets for 54601, 54605, 54606.

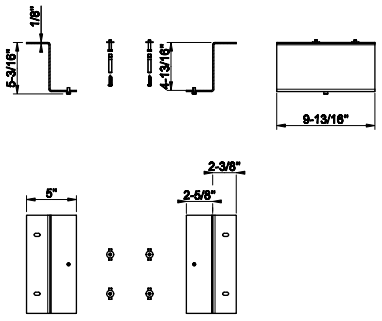



031	Chrome	428

54597

1 1/4" push drain with or without overflow feature
- Recommended for Gessi 316 Collection

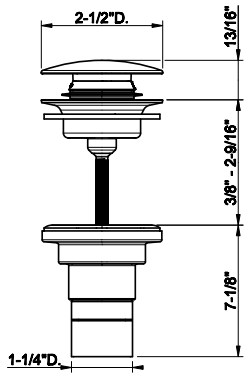



239	Steel Br.	212	708	Copper Br. PVD	313
299	Matte Black	287	726	Warm Bronze Br. PVD	313
707	Black Metal Br. PVD	313	727	Brass Br. PVD	313

01427

1 1/4" push drain with or without overflow feature

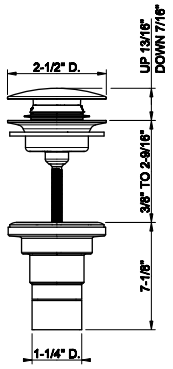



031	Chrome	134	030	Copper PVD	379
239	Steel Br.	134	708	Copper Br. PVD	379
275	Matte Cipria	326	735	Warm Bronze PVD	379
273	Matte Greige	326	726	Warm Bronze Br. PVD	379
277	Glossy Ocra	326	710	Brass PVD	379
278	Glossy Coral	326	727	Brass Br. PVD	379
276	Matte Agave	326	246	Gold PVD	405
299	Matte Black	386	716	Gold Br. PVD	405
720	Nickel PVD	379	845	Dark Bronze	379
706	Black Metal PVD	379	187	Aged Bronze	379
707	Black Metal Br. PVD	379	713	Antique Brass	379


GESSI
VENTAGLIO
VENTAGLIO

72051



Single lever washbasin mixer with Stop&Go assembly
- Spout projection 5-1/16”
- Height 6-3/4”
- 1-1/4” D. Drain
- Max flow rate 1.2GPM

031	Chrome	950	708	Copper Br. PVD	1.501
149	Finox Br. Nickel	1.284	735	Warm Bronze PVD	1.407
299	Matte Black	1.284	726	Warm Bronze Br. PVD	1.501
720	Nickel PVD	1.407	710	Brass PVD	1.407
706	Black Metal PVD	1.407	727	Brass Br. PVD	1.501
707	Black Metal Br. PVD	1.501	845	Dark Bronze	1.501
030	Copper PVD	1.407			

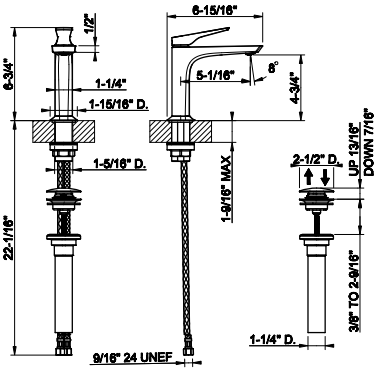

72002



Single lever washbasin mixer without Stop&Go assembly
- Spout projection 5-1/16”
- Height 6-3/4”
- Drain not included - See DRAINSsection
- Max flow rate 1.2 GPM

031	Chrome	904	708	Copper Br. PVD	1.431
149	Finox Br. Nickel	1.223	735	Warm Bronze PVD	1.339
299	Matte Black	1.223	726	Warm Bronze Br. PVD	1.431
720	Nickel PVD	1.339	710	Brass PVD	1.339
706	Black Metal PVD	1.339	727	Brass Br. PVD	1.431
707	Black Metal Br. PVD	1.431	845	Dark Bronze	1.431
030	Copper PVD	1.339			

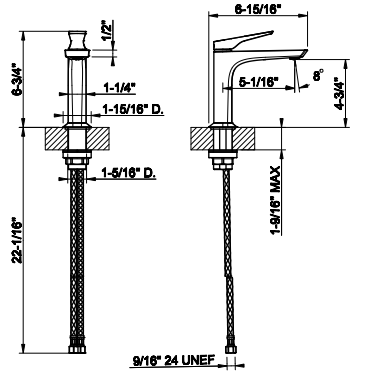

72053



Medium single lever washbasin with Stop&Go assembly
- Spout projection 6-1/16”
- Height 11-7/8”
- 1-1/4” D. Drain
- Max flow rate 1.2 GPM

031	Chrome	1.366	708	Copper Br. PVD	2.160
149	Finox Br. Nickel	1.846	735	Warm Bronze PVD	2.022
299	Matte Black	1.846	726	Warm Bronze Br. PVD	2.160
720	Nickel PVD	2.022	710	Brass PVD	2.022
706	Black Metal PVD	2.022	727	Brass Br. PVD	2.160
707	Black Metal Br. PVD	2.160	845	Dark Bronze	2.160
030	Copper PVD	2.022			

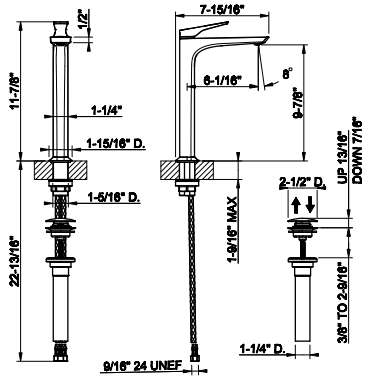

72004



Medium single lever washbasin without Stop&Go assembly
- Spout projection 6-1/16”
- Height 11-7/8”
- Drain not included - See DRAINS section
- Max flow rate 1.2 GPM

031	Chrome	1.317	708	Copper Br. PVD	2.085
149	Finox Br. Nickel	1.781	735	Warm Bronze PVD	1.952
299	Matte Black	1.781	726	Warm Bronze Br. PVD	2.085
720	Nickel PVD	1.952	710	Brass PVD	1.952
706	Black Metal PVD	1.952	727	Brass Br. PVD	2.085
707	Black Metal Br. PVD	2.085	845	Dark Bronze	2.085
030	Copper PVD	1.952			

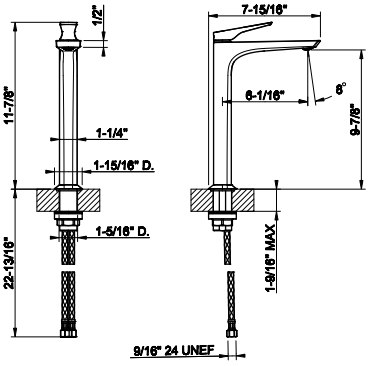

VENTAGLIO

72013

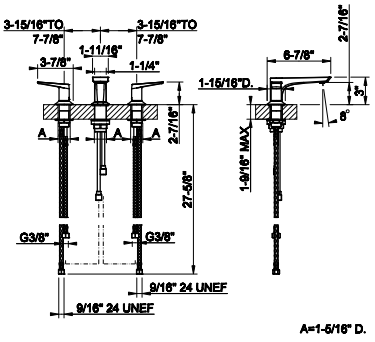

Widespread washbasin mixer without pop-up assembly
- Spout projection 5-1/16”
- Height 3”
- Drain not included - See DRAINS section
- Max flow rate 1.2 GPM



031	Chrome	1.559	708	Copper Br. PVD	2.465
149	Finox Br. Nickel	2.105	735	Warm Bronze PVD	2.307
299	Matte Black	2.105	726	Warm Bronze Br. PVD	2.465
720	Nickel PVD	2.307	710	Brass PVD	2.307
706	Black Metal PVD	2.307	727	Brass Br. PVD	2.465
707	Black Metal Br. PVD	2.465	845	Dark Bronze	2.465
030	Copper PVD	2.307			

72014

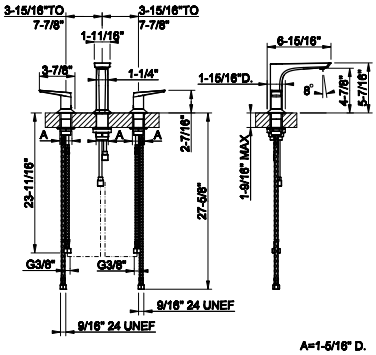

Widespread washbasin mixer without pop-up assembly
- Spout projection 5-1/16”
- Height 5-7/16”
- Drain not included - See DRAINS section
- Max flow rate 1.2 GPM



031	Chrome	1.559	708	Copper Br. PVD	2.465
149	Finox Br. Nickel	2.105	735	Warm Bronze PVD	2.307
299	Matte Black	2.105	726	Warm Bronze Br. PVD	2.465
720	Nickel PVD	2.307	710	Brass PVD	2.307
706	Black Metal PVD	2.307	727	Brass Br. PVD	2.465
707	Black Metal Br. PVD	2.465	845	Dark Bronze	2.465
030	Copper PVD	2.307			

63397+72088

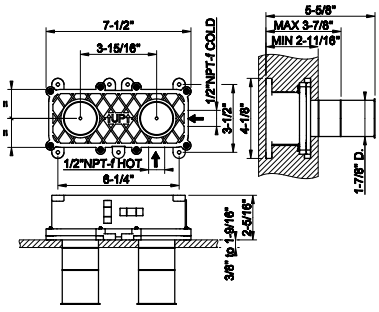

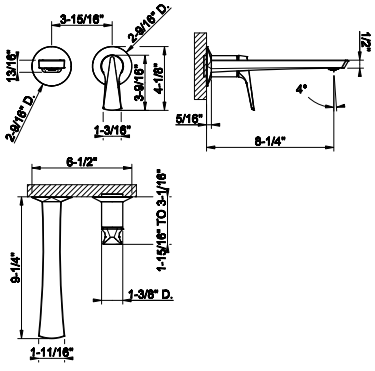

63397

Wall-mounted washbasin mixer rough valve
- Drain not included - See DRAINS section

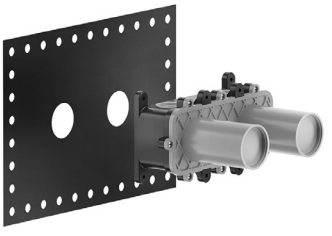

239	Steel Br.	900

72088

TRIM PARTS ONLY Wall-mounted washbasin mixer trim
- Spout projection 8-1/4”
- Height 4-1/8”
- Drain not included - See DRAINS section
- Requires in-wall rough valve 63397
- Max flow rate 1.2 GPM



031	Chrome	1.225	708	Copper Br. PVD	1.938
149	Finox Br. Nickel	1.655	735	Warm Bronze PVD	1.815
299	Matte Black	1.655	726	Warm Bronze Br. PVD	1.938
720	Nickel PVD	1.815	710	Brass PVD	1.815
706	Black Metal PVD	1.815	727	Brass Br. PVD	1.938
707	Black Metal Br. PVD	1.938	845	Dark Bronze	1.938
030	Copper PVD	1.815			

72102



Wall-mounted washbasin spout only
- Connection 1/2” NPT-F
- Spout projection 8-1/4”
- Requires mixer control
- Drain not included -See DRAINS section
- Max flow rate 1.2 GPM

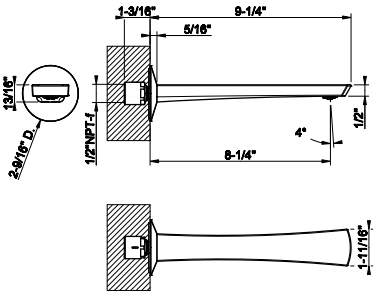

031	Chrome	750	708	Copper Br. PVD	1.187
149	Finox Br. Nickel	1.012	735	Warm Bronze PVD	1.109
299	Matte Black	1.012	726	Warm Bronze Br. PVD	1.187
720	Nickel PVD	1.109	710	Brass PVD	1.109
706	Black Metal PVD	1.109	727	Brass Br. PVD	1.187
707	Black Metal Br. PVD	1.187	845	Dark Bronze	1.187
030	Copper PVD	1.109			

63399



Ceiling-mounted washbasin spout only
- Spout length 63”
- Drain not included - See DRAINS section
- Requires mixer control
- Maxflow rate 1.2 gpm

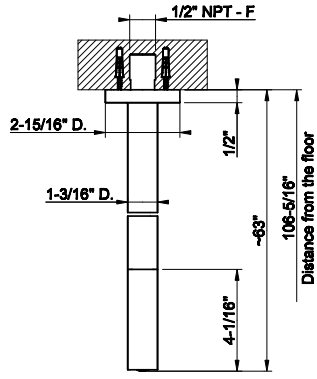

031	Chrome	1.777	030	Copper PVD	2.631
275	Matte Cipria	2.279	708	Copper Br. PVD	2.806
273	Matte Greige	2.279	735	Warm Bronze PVD	2.631
277	Glossy Ocra	2.666	726	Warm Bronze Br. PVD	2.806
278	Glossy Coral	2.666	710	Brass PVD	2.631
276	Matte Agave	2.279	727	Brass Br. PVD	2.806
149	Finox Br. Nickel	2.399	246	Gold PVD	2.986
299	Matte Black	2.399	716	Gold Br. PVD	2.986
720	Nickel PVD	2.631	845	Dark Bronze	2.666
706	Black Metal PVD	2.631	187	Aged Bronze	2.806
707	Black Metal Br. PVD	2.806	713	Antique Brass	2.806

VENTAGLIO

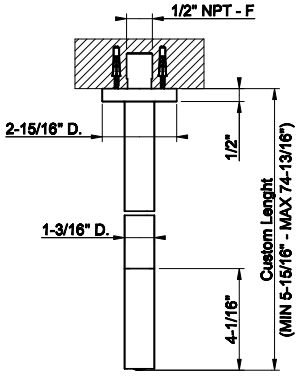

63499

Ceiling-mounted washbasin spout only
- Custom length: Minimum 5-15/16" - Maximum 74-13/16"
- Drain not included - See DRAINS section
- Requires mixer control
- Max flow rate 1.2 gpm



031	Chrome	2.548	030	Copper PVD	3.769
275	Matte Cipria	3.439	708	Copper Br. PVD	4.022
273	Matte Greige	3.439	735	Warm Bronze PVD	3.769
277	Glossy Ocra	3.439	726	Warm Bronze Br. PVD	4.022
278	Glossy Coral	3.439	710	Brass PVD	3.769
276	Matte Agave	3.439	727	Brass Br. PVD	4.022
149	Finox Br. Nickel	3.439	246	Gold PVD	4.281
299	Matte Black	3.439	716	Gold Br. PVD	4.281
720	Nickel PVD	3.769	845	Dark Bronze	4.022
706	Black Metal PVD	3.769	187	Aged Bronze	4.022
707	Black Metal Br. PVD	4.022	713	Antique Brass	4.022

63412+72109

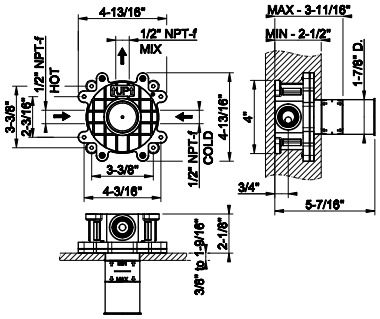

63412

In-wall for wall-mounted washbasin remote control. One-way

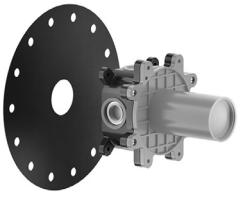

239	Steel Br.	516

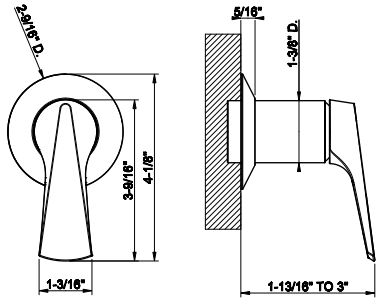

72109

External part wall-mounted one-way basin mixer
- 1/2" connections
- Drain not included - See DRAINS section
- Requires in-wall rough valve 63412



031	Chrome	636	708	Copper Br. PVD	1.006
149	Finox Br. Nickel	861	735	Warm Bronze PVD	943
299	Matte Black	861	726	Warm Bronze Br. PVD	1.006
720	Nickel PVD	943	710	Brass PVD	943
706	Black Metal PVD	943	727	Brass Br. PVD	1.006
707	Black Metal Br. PVD	1.006	845	Dark Bronze	1.006
030	Copper PVD	943			



48189

Floor-mounted tub filler in-floor rough valve

031	Chrome	847

48189+72028

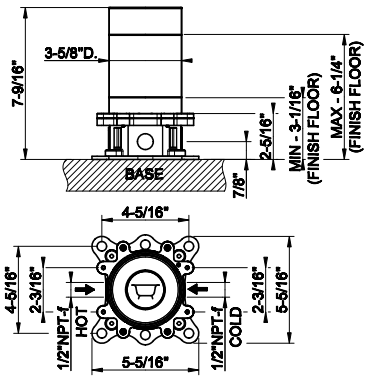



72028

TRIM PARTS ONLY Floor-mounted tub filler
- Handshower
- 59” flex hose
- Diverter
- Spout projection 9-5/8”
- Handshower max flow rate1,75 GPM
- Spout mixed flow rate 5,4 GPM at 60 PSI
- Requires in-floor rough valve 48189

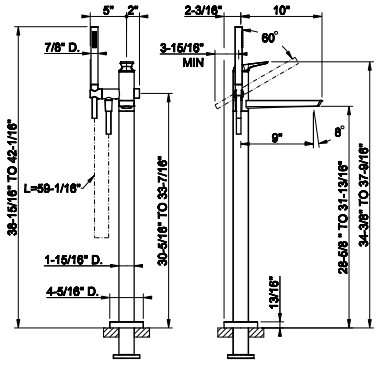

031	Chrome	4.977	708	Copper Br. PVD	7.860
149	Finox Br. Nickel	6.718	735	Warm Bronze PVD	7.365
299	Matte Black	6.718	726	Warm Bronze Br. PVD	7.860
720	Nickel PVD	7.365	710	Brass PVD	7.365
706	Black Metal PVD	7.365	727	Brass Br. PVD	7.860
707	Black Metal Br. PVD	7.860	845	Dark Bronze	7.860
030	Copper PVD	7.365			



72103

Wall-mounted bath spout only
- Connection 1/2” NPT-F
- Spout projection 7-15/16”
- Requires mixer control
- Flow rate 5,4 GPM at 60PSI

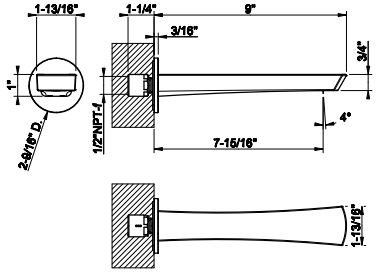

031	Chrome	801	708	Copper Br. PVD	1.264
149	Finox Br. Nickel	1.083	735	Warm Bronze PVD	1.187
299	Matte Black	1.083	726	Warm Bronze Br. PVD	1.264
720	Nickel PVD	1.187	710	Brass PVD	1.187
706	Black Metal PVD	1.187	727	Brass Br. PVD	1.264
707	Black Metal Br. PVD	1.264	845	Dark Bronze	1.264
030	Copper PVD	1.187			

VENTAGLIO

54139+72036

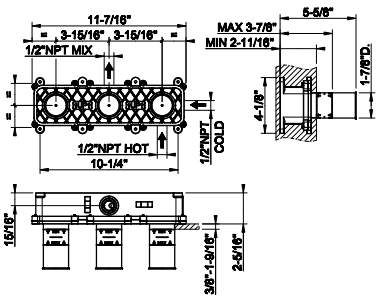

54139

Wall-mounted bath mixer control rough valve
- 1/2” connections
- Non positive shut off



239	Steel Br.	1.087

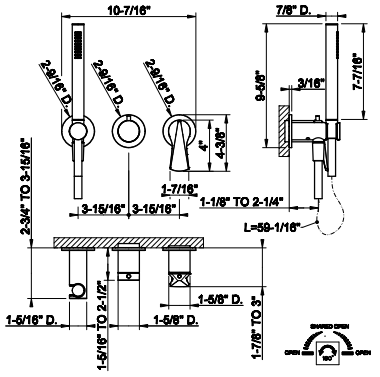

72036

TRIM PARTS ONLY Wall-mounted bath mixer control
- Single backplate
- Two-ways diverter
- Water outlet
- Anti-scalding
- Handshower max flow rate 1.75 GPM
- Requires inline Pressure Balance



031	Chrome	1.938	708	Copper Br. PVD	3.061
149	Finox Br. Nickel	2.617	735	Warm Bronze PVD	2.867
299	Matte Black	2.617	726	Warm Bronze Br. PVD	3.061
720	Nickel PVD	2.867	710	Brass PVD	2.867
706	Black Metal PVD	2.867	727	Brass Br. PVD	3.061
707	Black Metal Br. PVD	3.061	845	Dark Bronze	3.061
030	Copper PVD	2.867			

09279+63139

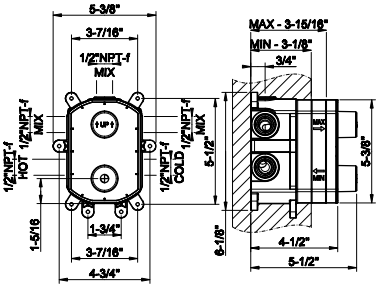

09279

In-wall thermostatic rough valve for 1/2/3-way diverter function
- 1/2” connections
- Vertical application
- Anti-scalding
- Non-Shared function

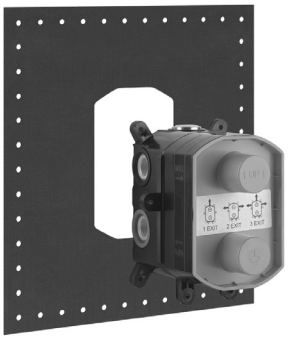

031	Chrome	877

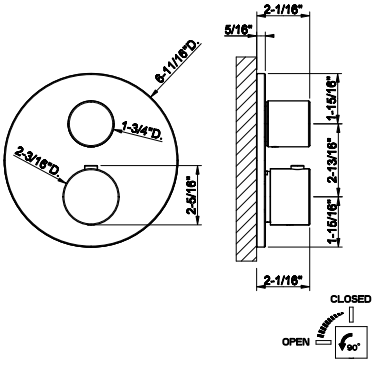

63139

TRIM PARTS ONLY External parts for thermostatic with single volume control RIGATO.
- Single backplate
- 1/2” connections
- Vertical application
- Anti-scalding
- Requires in-wall rough valve 09279



031	Chrome	1.484	708	Copper Br. PVD	2.345
149	Finox Br. Nickel	2.004	735	Warm Bronze PVD	2.197
299	Matte Black	2.004	726	Warm Bronze Br. PVD	2.345
720	Nickel PVD	2.197	710	Brass PVD	2.197
706	Black Metal PVD	2.197	727	Brass Br. PVD	2.345
707	Black Metal Br. PVD	2.345	187	Aged Bronze	2.345
030	Copper PVD	2.197	713	Antique Brass	2.345

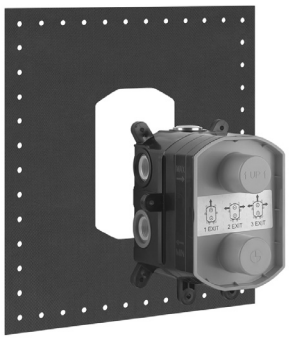

09279

In-wall thermostatic rough valve for 1/2/3-way diverter function
- 1/2” connections
- Vertical application
- Anti-scalding
- Non-Shared function

031	Chrome	877

09279+63141

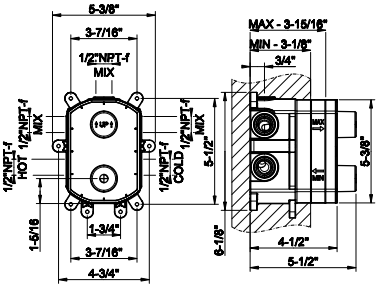



63141

TRIM PARTS ONLY External parts for 2-way diverter thermostatic and volume control RIGATO.
- Single backplate
- 1/2” connections
- Vertical application
- Anti-scalding
- Requires in-wall rough valve 09279

031	Chrome	1.484	708	Copper Br. PVD	2.345
149	Finox Br. Nickel	2.004	735	Warm Bronze PVD	2.197
299	Matte Black	2.004	726	Warm Bronze Br. PVD	2.345
720	Nickel PVD	2.197	710	Brass PVD	2.197
706	Black Metal PVD	2.197	727	Brass Br. PVD	2.345
707	Black Metal Br. PVD	2.345	187	Aged Bronze	2.345
030	Copper PVD	2.197	713	Antique Brass	2.345

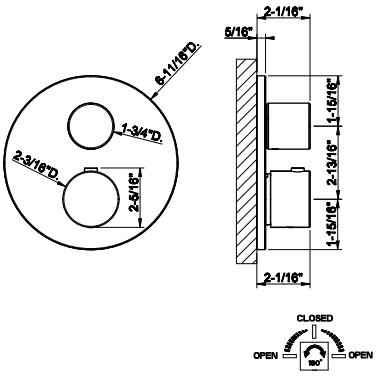

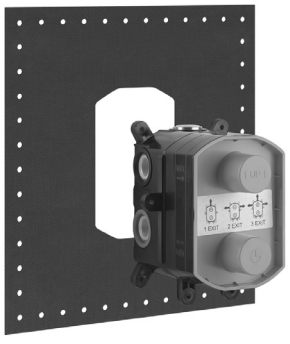

09279

In-wall thermostatic rough valve for 1/2/3-way diverter function
- 1/2” connections
- Vertical application
- Anti-scalding
- Non-Shared function

031	Chrome	877

09279+63143

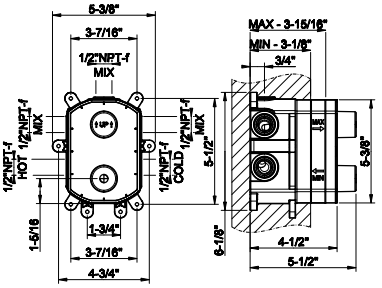



63143

TRIM PARTS ONLY External parts for 3-way diverterthermostatic and volume control RIGATO.
- Single backplate
- 1/2” connections
- Vertical application
- Anti-scalding
- Requires in-wall rough valve 09279

031	Chrome	1.484	708	Copper Br. PVD	2.345
149	Finox Br. Nickel	2.004	735	Warm Bronze PVD	2.197
299	Matte Black	2.004	726	Warm Bronze Br. PVD	2.345
720	Nickel PVD	2.197	710	Brass PVD	2.197
706	Black Metal PVD	2.197	727	Brass Br. PVD	2.345
707	Black Metal Br. PVD	2.345	187	Aged Bronze	2.345
030	Copper PVD	2.197	713	Antique Brass	2.345

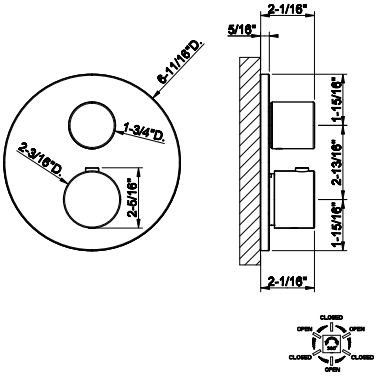

VENTAGLIO

54169+63331

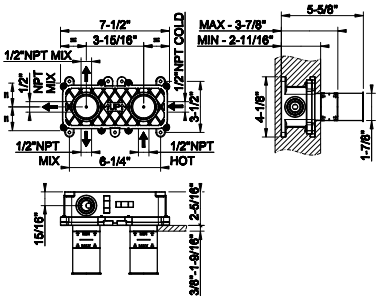

54169

In-wall thermostatic rough valve for 1/2/3-way diverter function
- 1/2” connections
- Anti-scalding
- Service stops not included
- Non-Shared Function

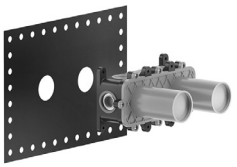

239	Steel Br.	843

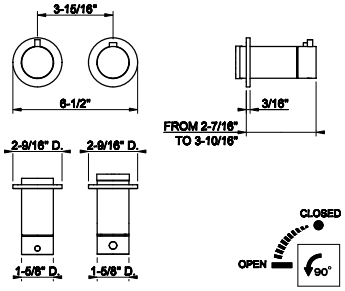

63331

TRIM PARTS ONLY External parts for thermostatic with singlevolume control
- Single backplate
- 1/2” connections
- Anti-scalding
- Requires in-wall rough valve 54169



031	Chrome	1.468	735	Warm Bronze PVD	2.174
149	Finox Br. Nickel	1.982	726	Warm Bronze Br. PVD	2.318
299	Matte Black	1.982	710	Brass PVD	2.174
720	Nickel PVD	2.174	727	Brass Br. PVD	2.318
706	Black Metal PVD	2.174	845	Dark Bronze	2.318
707	Black Metal Br. PVD	2.318	187	Aged Bronze	2.318
030	Copper PVD	2.174	713	Antique Brass	2.318
708	Copper Br. PVD	2.318			

54169+63332

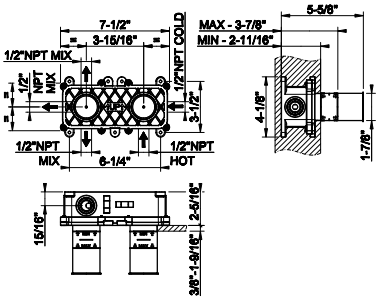

54169

In-wall thermostatic rough valve for 1/2/3-way diverter function
- 1/2” connections
- Anti-scalding
- Service stops not included
- Non-Shared Function

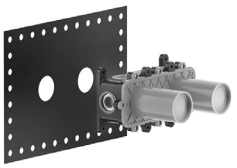

239	Steel Br.	843

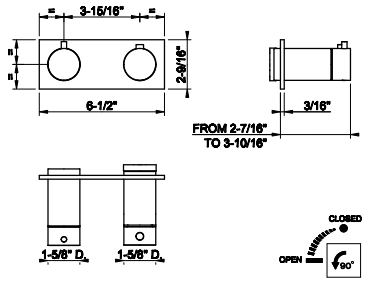

63332

TRIMS PARTS ONLY External parts for thermostatic with single volume control
- Single backplates
- 1/2” connections
- Anti-scalding
- Requires in-wall rough valve 54169



031	Chrome	1.625	735	Warm Bronze PVD	2.403
149	Finox Br. Nickel	2.194	726	Warm Bronze Br. PVD	2.567
299	Matte Black	2.194	710	Brass PVD	2.403
720	Nickel PVD	2.403	727	Brass Br. PVD	2.567
706	Black Metal PVD	2.403	845	Dark Bronze	2.567
707	Black Metal Br. PVD	2.567	187	Aged Bronze	2.567
030	Copper PVD	2.403	713	Antique Brass	2.567
708	Copper Br. PVD	2.567			

54169

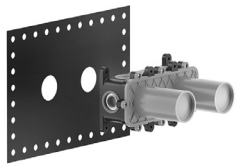

In-wall thermostatic rough valve for 1/2/3-way diverter function
- 1/2” connections
- Anti-scalding
- Service stops not included
- Non-Shared Function

239	Steel Br.	843

54169+63333

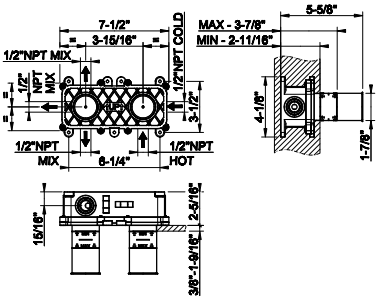

63333



TRIM PARTS ONLY External parts for 2-way diverterthermostatic and volume control
- Single backplate
- 1/2” connections
- Anti-scalding
- Requires in-wall rough valve 54169

031	Chrome	1.468	735	Warm Bronze PVD	2.174
149	Finox Br. Nickel	1.982	726	Warm Bronze Br. PVD	2.318
299	Matte Black	1.982	710	Brass PVD	2.174
720	Nickel PVD	2.174	727	Brass Br. PVD	2.318
706	Black Metal PVD	2.174	845	Dark Bronze	2.318
707	Black Metal Br. PVD	2.318	187	Aged Bronze	2.318
030	Copper PVD	2.174	713	Antique Brass	2.318
708	Copper Br. PVD	2.318			

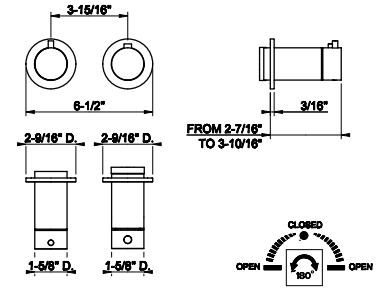

54169

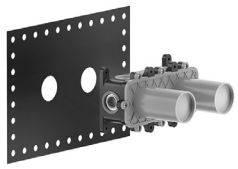

In-wall thermostatic rough valve for 1/2/3-way diverter function
- 1/2” connections
- Anti-scalding
- Service stops not included
- Non-Shared Function

239	Steel Br.	843

54169+63334

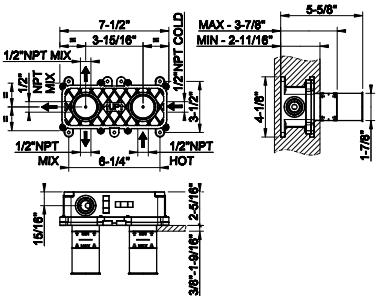

63334



TRIMS PARTS ONLY External parts for 2 -way diverter thermostatic and volume control
- Single backplates
- 1/2” connections
- Anti-scalding
- Requires in-wall rough valve 54169

031	Chrome	1.625	735	Warm Bronze PVD	2.403
149	Finox Br. Nickel	2.194	726	Warm Bronze Br. PVD	2.567
299	Matte Black	2.194	710	Brass PVD	2.403
720	Nickel PVD	2.403	727	Brass Br. PVD	2.567
706	Black Metal PVD	2.403	845	Dark Bronze	2.567
707	Black Metal Br. PVD	2.567	187	Aged Bronze	2.567
030	Copper PVD	2.403	713	Antique Brass	2.567
708	Copper Br. PVD	2.567			

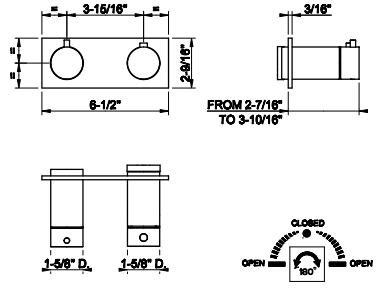

VENTAGLIO

54169+63335

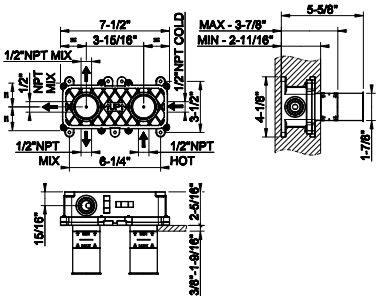

54169

In-wall thermostatic rough valve for 1/2/3-way diverter function
- 1/2” connections
- Anti-scalding
- Service stops not included
- Non-Shared Function

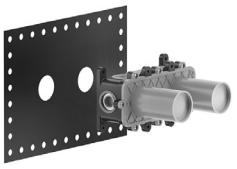

239	Steel Br.	843

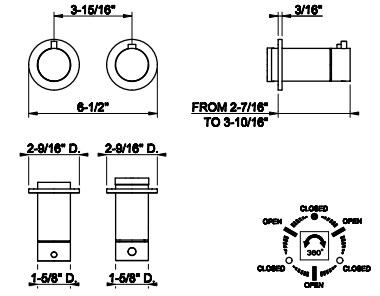

63335

TRIM PARTS ONLY External parts for 3-way diverter thermostatic and volume control
- Single backplate
- 1/2” connections
- Anti-scalding
- Requires in-wall rough valve 54169



031	Chrome	1.468	735	Warm Bronze PVD	2.174
149	Finox Br. Nickel	1.982	726	Warm Bronze Br. PVD	2.318
299	Matte Black	1.982	710	Brass PVD	2.174
720	Nickel PVD	2.174	727	Brass Br. PVD	2.318
706	Black Metal PVD	2.174	845	Dark Bronze	2.318
707	Black Metal Br. PVD	2.318	187	Aged Bronze	2.318
030	Copper PVD	2.174	713	Antique Brass	2.318
708	Copper Br. PVD	2.318			

54169+63336

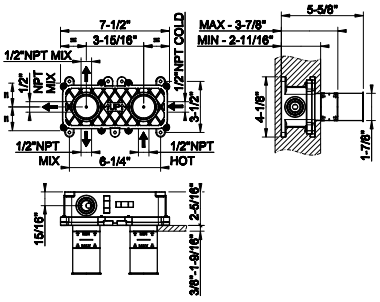

54169

In-wall thermostatic rough valve for 1/2/3-way diverter function
- 1/2” connections
- Anti-scalding
- Service stops not included
- Non-Shared Function

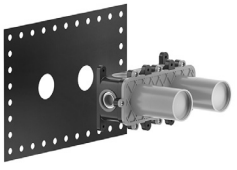

239	Steel Br.	843

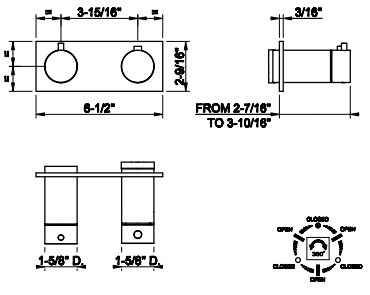

63336

TRIMS PARTS ONLY External parts for 3 -way diverter thermostatic and volume control
- Single backplates
- 1/2” connections
- Anti-scalding
- Requires in-wall rough valve 54169



031	Chrome	1.625	735	Warm Bronze PVD	2.403
149	Finox Br. Nickel	2.194	726	Warm Bronze Br. PVD	2.567
299	Matte Black	2.194	710	Brass PVD	2.403
720	Nickel PVD	2.403	727	Brass Br. PVD	2.567
706	Black Metal PVD	2.403	845	Dark Bronze	2.567
707	Black Metal Br. PVD	2.567	187	Aged Bronze	2.567
030	Copper PVD	2.403	713	Antique Brass	2.567
708	Copper Br. PVD	2.567			

09272



In-wall single exit pressure balance rough valve
• 1/2” connections

031	Chrome	371

09272+72172

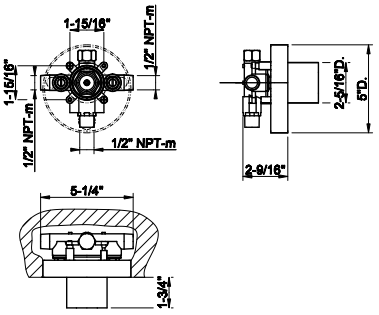

72172



TRIM PARTS ONLY External parts for single exit pressure balance
• Single backplate
• Requires in-wall rough valve 09272

031	Chrome	1.165	735	Warm Bronze PVD	1.725
149	Finox Br. Nickel	1.574	726	Warm Bronze Br. PVD	1.842
299	Matte Black	1.574	710	Brass PVD	1.725
720	Nickel PVD	1.725	727	Brass Br. PVD	1.842
706	Black Metal PVD	1.725	845	Dark Bronze	1.842
707	Black Metal Br. PVD	1.842	187	Aged Bronze	1.842
030	Copper PVD	1.725	713	Antique Brass	1.842
708	Copper Br. PVD	1.842			

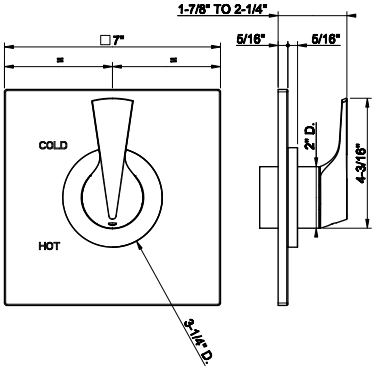

09274



In-wall pressure balance rough valve with 2-way diverter
• 1/2” connections
• Non-Shared Function

031	Chrome	443

09274+72174

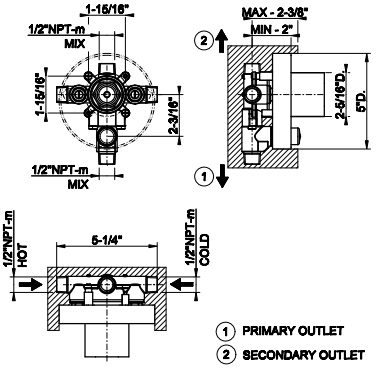

72174



TRIM PARTS ONLY External parts for pressure balance with two ways diverter
• Single backplate
• Requires in-wall rough valve 09274

031	Chrome	1.387	735	Warm Bronze PVD	2.054
149	Finox Br. Nickel	1.873	726	Warm Bronze Br. PVD	2.191
299	Matte Black	1.873	710	Brass PVD	2.054
720	Nickel PVD	2.054	727	Brass Br. PVD	2.191
706	Black Metal PVD	2.054	845	Dark Bronze	2.191
707	Black Metal Br. PVD	2.191	187	Aged Bronze	2.191
030	Copper PVD	2.054	713	Antique Brass	2.191
708	Copper Br. PVD	2.191			

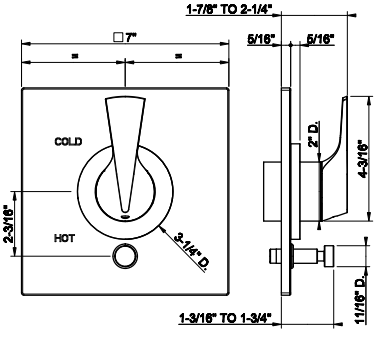

VENTAGLIO

39693+39752

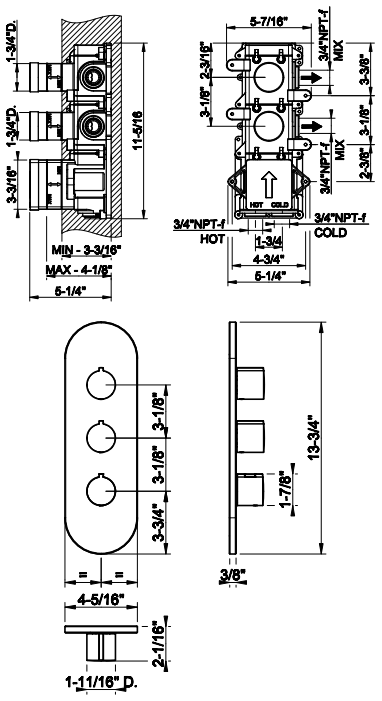

39693

In-wall thermostatic rough valve with 2 volume controls
- High capacity
- 3/4" connections
- Vertical/Horizontal application
- Anti-scalding

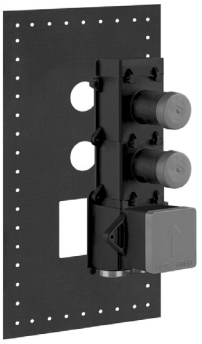

031	Chrome	1.903

39752

TRIM PARTS ONLY External parts for thermostatic with 2 volume controls
- Single backplate
- High Capacity
- 3/4" connections
- Vertical/horizontal application
- Anti-scalding
- Requires in-wall rough valve 39693



031	Chrome	2.197	735	Warm Bronze PVD	3.252
149	Finox Br. Nickel	2.966	726	Warm Bronze Br. PVD	3.471
299	Matte Black	2.966	710	Brass PVD	3.252
147	Chrome Br.	2.966	727	Brass Br. PVD	3.471
720	Nickel PVD	3.252	845	Dark Bronze	3.471
706	Black Metal PVD	3.252	187	Aged Bronze	3.471
707	Black Metal Br. PVD	3.471	713	Antique Brass	3.471
030	Copper PVD	3.252	279	Matte White	2.966
708	Copper Br. PVD	3.471			

39693+39644

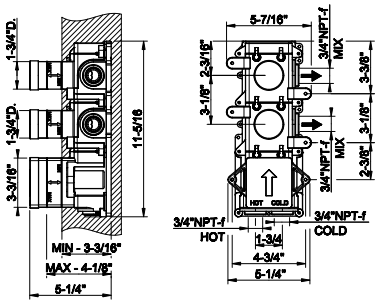

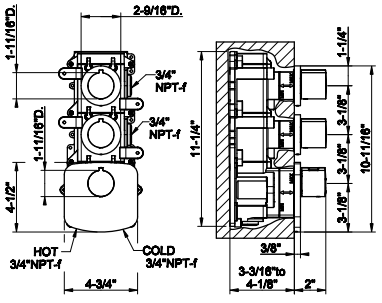

39693

In-wall thermostatic rough valve with 2 volume controls
- High capacity
- 3/4" connections
- Vertical/Horizontal application
- Anti-scalding

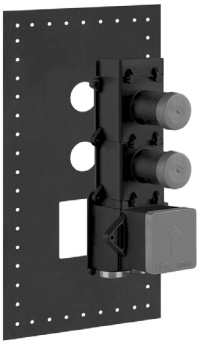

031	Chrome	1.903

39644

TRIM PARTS ONLY External parts for thermostatic with 2 volume controls
- Separate backplate
- High Capacity
- 3/4" connections
- Vertical/horizontal application
- Anti-scalding
- Requires in-wall rough valve 39693



031	Chrome	2.149	735	Warm Bronze PVD	3.915
149	Finox Br. Nickel	3.571	726	Warm Bronze Br. PVD	4.178
299	Matte Black	3.571	710	Brass PVD	3.915
147	Chrome Br.	3.571	727	Brass Br. PVD	4.178
720	Nickel PVD	3.915	845	Dark Bronze	4.178
706	Black Metal PVD	3.915	187	Aged Bronze	4.178
707	Black Metal Br. PVD	4.178	713	Antique Brass	4.178
030	Copper PVD	3.915	279	Matte White	3.571
708	Copper Br. PVD	4.178			

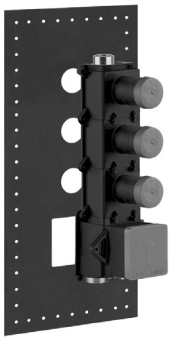

39695

In-wall thermostatic rough valve with 3 volume controls
- High capacity
- 3/4” connections
- Vertical/Horizontal application
- Anti-scalding

031	Chrome	2.197

39695+39754

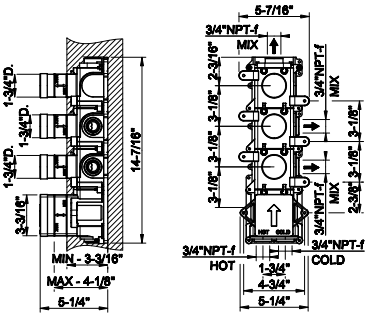



39754

TRIM PARTS ONLY External parts for thermostatic with 3 volume controls
- Single backplate
- High Capacity
- 3/4” connections
- Vertical/horizontal application
- Anti-scalding
- Requires in-wall rough valve 39695

031	Chrome	2.277	735	Warm Bronze PVD	3.371
149	Finox Br. Nickel	3.076	726	Warm Bronze Br. PVD	3.600
299	Matte Black	3.076	710	Brass PVD	3.371
147	Chrome Br.	3.076	727	Brass Br. PVD	3.600
720	Nickel PVD	3.371	845	Dark Bronze	3.600
706	Black Metal PVD	3.371	187	Aged Bronze	3.600
707	Black Metal Br. PVD	3.600	713	Antique Brass	3.600
030	Copper PVD	3.371	279	Matte White	3.076
708	Copper Br. PVD	3.600			

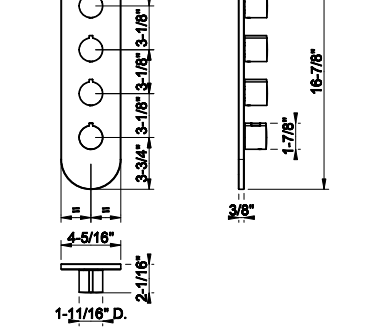

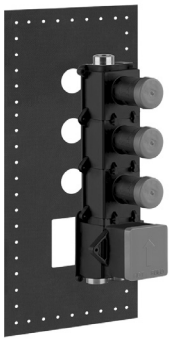

39695

In-wall thermostatic rough valve with 3 volume controls
- High capacity
- 3/4” connections
- Vertical/Horizontal application
- Anti-scalding

031	Chrome	2.197

39695+39646

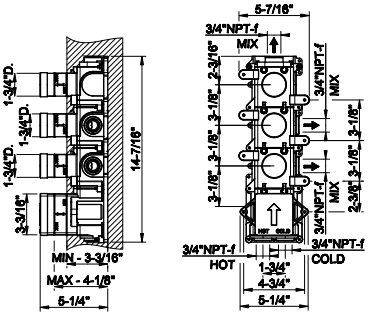



39646

TRIM PARTS ONLY External parts for thermostatic with 3 volume controls
- Separate backplate
- High Capacity
- 3/4” connections
- Vertical/horizontal application
- Anti-scalding
- Requires in-wall rough valve 39695

031	Chrome	2.498	735	Warm Bronze PVD	4.502
149	Finox Br. Nickel	4.107	726	Warm Bronze Br. PVD	4.805
299	Matte Black	4.107	710	Brass PVD	4.502
147	Chrome Br.	4.107	727	Brass Br. PVD	4.805
720	Nickel PVD	4.502	845	Dark Bronze	4.805
706	Black Metal PVD	4.502	187	Aged Bronze	4.805
707	Black Metal Br. PVD	4.805	713	Antique Brass	4.805
030	Copper PVD	4.502	279	Matte White	4.107
708	Copper Br. PVD	4.805			

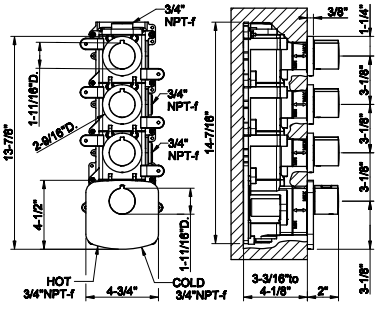

VENTAGLIO

39699+39756

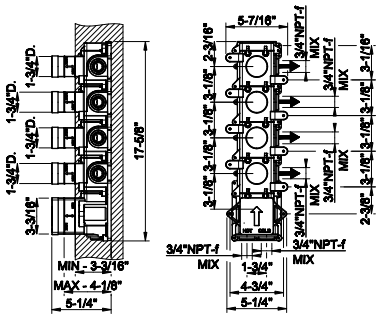

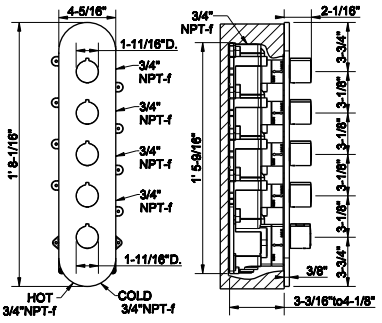

39699

In-wall thermostatic rough valve with 4 volume controls
- High capacity
- 3/4" connections
- Vertical/Horizontal application
- Anti-scalding
- Max flow rate 1.75 GPM

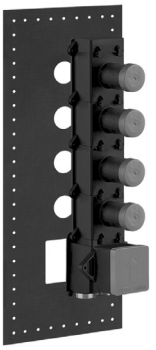

031	Chrome	2.498

39756

TRIM PARTS ONLY External parts for thermostatic with 4 volume controls
- Single backplate
- High Capacity
- 3/4" connections
- Vertical/horizontal application
- Anti-scalding
- Requires in-wall rough valve 39699



031	Chrome	2.637	735	Warm Bronze PVD	3.904
149	Finox Br. Nickel	3.561	726	Warm Bronze Br. PVD	4.168
299	Matte Black	3.561	710	Brass PVD	3.904
147	Chrome Br.	3.561	727	Brass Br. PVD	4.168
720	Nickel PVD	3.904	845	Dark Bronze	4.168
706	Black Metal PVD	3.904	187	Aged Bronze	4.168
707	Black Metal Br. PVD	4.168	713	Antique Brass	4.168
030	Copper PVD	3.904	279	Matte White	3.561
708	Copper Br. PVD	4.168			

39699+39650

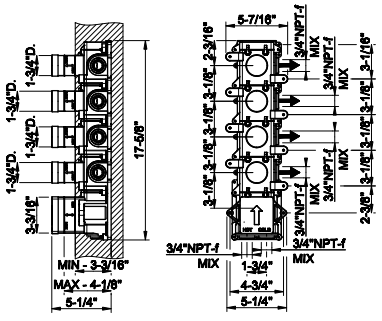

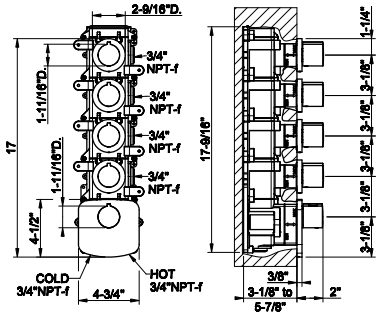

39699

In-wall thermostatic rough valve with 4 volume controls
- High capacity
- 3/4" connections
- Vertical/Horizontal application
- Anti-scalding
- Max flow rate 1.75 GPM

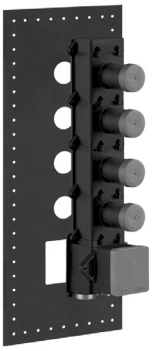

031	Chrome	2.498

39650

TRIM PARTS ONLY External parts for thermostatic with 4 volume controls
- Separate backplate
- High Capacity
- 3/4" connections
- Vertical/horizontal application
- Anti-scalding
- Requires in-wall rough valve 39699



031	Chrome	2.829	735	Warm Bronze PVD	5.381
149	Finox Br. Nickel	4.910	726	Warm Bronze Br. PVD	5.745
299	Matte Black	4.910	710	Brass PVD	5.381
147	Chrome Br.	4.910	727	Brass Br. PVD	5.745
720	Nickel PVD	5.381	845	Dark Bronze	5.745
706	Black Metal PVD	5.381	187	Aged Bronze	5.745
707	Black Metal Br. PVD	5.745	713	Antique Brass	5.745
030	Copper PVD	5.381	279	Matte White	4.910
708	Copper Br. PVD	5.745			

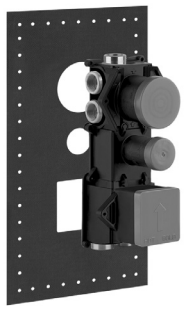

39601

In-wall thermostatic rough valve with 5-way diverter
- High capacity
- 3/4” connections
- Vertical/Horizontal application
- Anti-scalding
- Non shared function

031	Chrome	2.637

39601+39750

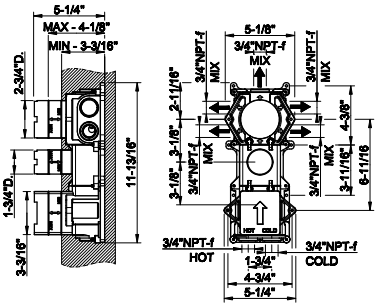



39750

TRIM PARTS ONLY External parts for 5-way thermostatic diverter with volume control
- Single backplate
- High Capacity
- 3/4” connections
- Vertical/horizontal application
- Anti-scalding
- Requires in-wall rough valve 39601

031	Chrome	2.204	735	Warm Bronze PVD	3.262
149	Finox Br. Nickel	2.976	726	Warm Bronze Br. PVD	3.483
299	Matte Black	2.976	710	Brass PVD	3.262
147	Chrome Br.	2.976	727	Brass Br. PVD	3.483
720	Nickel PVD	3.262	845	Dark Bronze	3.483
706	Black Metal PVD	3.262	187	Aged Bronze	3.483
707	Black Metal Br. PVD	3.483	713	Antique Brass	3.483
030	Copper PVD	3.262	279	Matte White	2.976
708	Copper Br. PVD	3.483			

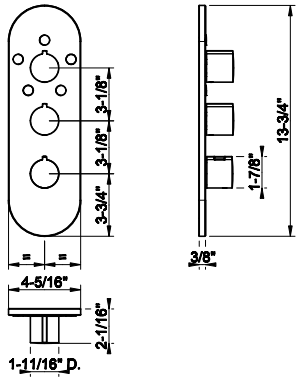

39681

In-wall thermostatic rough valve for individual mixer
- High capacity
- 3/4” connections
- Vertical/Horizontal application
- Anti-scalding

031	Chrome	1.169

39681+39666

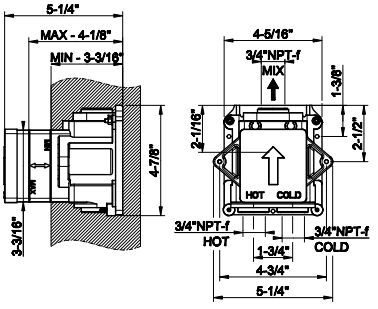



39666

TRIM PARTS ONLY External parts for individual thermostatic mixer
- High Capacity
- 3/4” connections
- Vertical/horizontal application
- Anti-scalding
- Requires in-wall rough valve 39681

031	Chrome	954	735	Warm Bronze PVD	1.811
149	Finox Br. Nickel	1.652	726	Warm Bronze Br. PVD	1.932
299	Matte Black	1.652	710	Brass PVD	1.811
147	Chrome Br.	1.652	727	Brass Br. PVD	1.932
720	Nickel PVD	1.811	845	Dark Bronze	1.932
706	Black Metal PVD	1.811	187	Aged Bronze	1.932
707	Black Metal Br. PVD	1.932	713	Antique Brass	1.932
030	Copper PVD	1.811	279	Matte White	1.652
708	Copper Br. PVD	1.932			

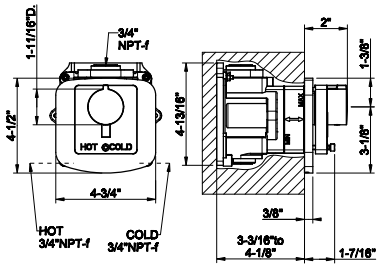

VENTAGLIO

39683+43268

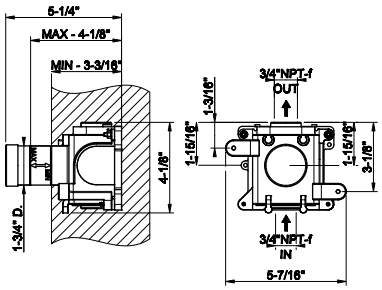

39683

In-wall thermostatic rough valve parts for volume control
- High capacity
- 3/4” connections
- Vertical/Horizontal application
- Anti-scalding

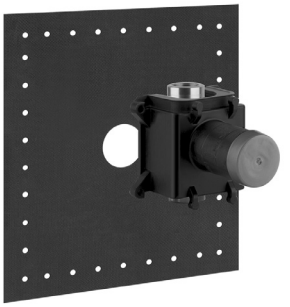

031	Chrome	582

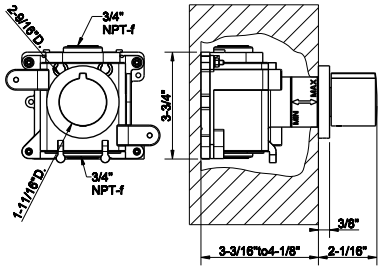

43268

TRIM PARTS ONLY External parts for individual thermostatic volume control
- Single backplate
- High Capacity
- 3/4” connections
- Vertical/horizontal application
- Anti-scalding
- Requires in-wall rough valve 39683



031	Chrome	580	735	Warm Bronze PVD	1.154
149	Finox Br. Nickel	1.054	726	Warm Bronze Br. PVD	1.231
299	Matte Black	1.054	710	Brass PVD	1.154
147	Chrome Br.	1.054	727	Brass Br. PVD	1.231
720	Nickel PVD	1.154	845	Dark Bronze	1.231
706	Black Metal PVD	1.154	187	Aged Bronze	1.231
707	Black Metal Br. PVD	1.231	713	Antique Brass	1.231
030	Copper PVD	1.154	279	Matte White	1.054
708	Copper Br. PVD	1.231			

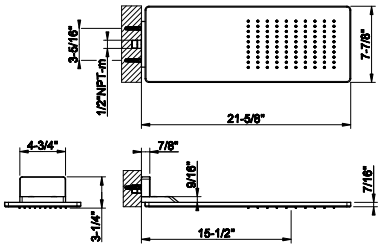

33095

Wall-fixing headshower.
- 1/2” connections
- Projection from the wall to center15-1/2”
- Total projection 21-5/8”
- Max flow rate1.75 GPM



239	Steel Br.	4.784	726	Warm Bronze Br. PVD	7.559
238	Mirror Steel	4.784	710	Brass PVD	7.081
299	Matte Black	6.459	727	Brass Br. PVD	7.559
720	Nickel PVD	7.081	246	Gold PVD	8.038
706	Black Metal PVD	7.081	716	Gold Br. PVD	8.038
707	Black Metal Br. PVD	7.559	845	Dark Bronze	7.559
030	Copper PVD	7.081	187	Aged Bronze	7.559
708	Copper Br. PVD	7.559	713	Antique Brass	7.559
735	Warm Bronze PVD	7.081	279	Matte White	6.459

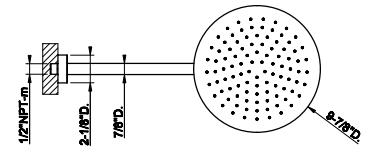

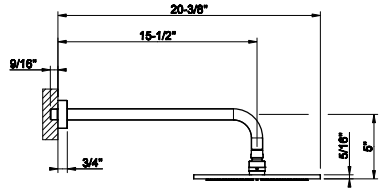

66148

Wall-mounted adjustable shower head with arm.
- 1/2” connections.
- Projection from wall to center 15-1/2”
- Total projection 20-3/8”
- Max flow rate 1.75 GPM



031	Chrome	1.168	708	Copper Br. PVD	1.845
149	Finox Br. Nickel	1.578	735	Warm Bronze PVD	1.730
299	Matte Black	1.578	726	Warm Bronze Br. PVD	1.845
720	Nickel PVD	1.730	710	Brass PVD	1.730
706	Black Metal PVD	1.730	727	Brass Br. PVD	1.845
707	Black Metal Br. PVD	1.845	845	Dark Bronze	1.845
030	Copper PVD	1.730			



63352

Ceiling-mounted adjustable shower head with arm.
- 1/2” connections.
- Projection from ceiling 10-1/4”
- Max flow rate 1.75 GPM

031	Chrome	966	726	Warm Bronze Br. PVD	1.528
149	Finox Br. Nickel	1.306	710	Brass PVD	1.431
299	Matte Black	1.306	727	Brass Br. PVD	1.528
720	Nickel PVD	1.431	246	Gold PVD	1.624
706	Black Metal PVD	1.431	716	Gold Br. PVD	1.624
707	Black Metal Br. PVD	1.528	845	Dark Bronze	1.528
030	Copper PVD	1.431	187	Aged Bronze	1.528
708	Copper Br. PVD	1.528	713	Antique Brass	1.528
735	Warm Bronze PVD	1.431	279	Matte White	1.306

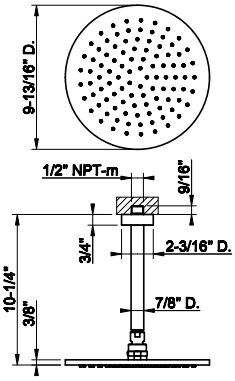



63350

Ceiling-mounted, shower head with arm, custom length
- 1/2” connections
- Projection from ceiling MIN 3-3/8” MAX 73-1/4”
- Max flow rate 1.75 GPM

031	Chrome	1.387	726	Warm Bronze Br. PVD	2.190
149	Finox Br. Nickel	1.870	710	Brass PVD	2.052
299	Matte Black	1.870	727	Brass Br. PVD	2.190
720	Nickel PVD	2.052	246	Gold PVD	2.333
706	Black Metal PVD	2.052	716	Gold Br. PVD	2.333
707	Black Metal Br. PVD	2.190	845	Dark Bronze	2.190
030	Copper PVD	2.052	187	Aged Bronze	2.190
708	Copper Br. PVD	2.190	713	Antique Brass	2.190
735	Warm Bronze PVD	2.052	279	Matte White	1.870

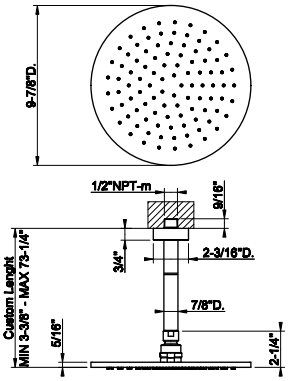



70042

Handshower and adjustable sliding rail set. UNITO
- Adjustable bar
- Adjustable hook
- 59” flex hose
- Wall elbow
- Max flow rate 1.75 GPM

031	Chrome	1.596	735	Warm Bronze PVD	2.363
149	Finox Br. Nickel	2.154	726	Warm Bronze Br. PVD	2.522
299	Matte Black	2.154	710	Brass PVD	2.363
720	Nickel PVD	2.363	727	Brass Br. PVD	2.522
706	Black Metal PVD	2.363	845	Dark Bronze	2.522
707	Black Metal Br. PVD	2.522	187	Aged Bronze	2.522
030	Copper PVD	2.363	713	Antique Brass	2.522
708	Copper Br. PVD	2.522			

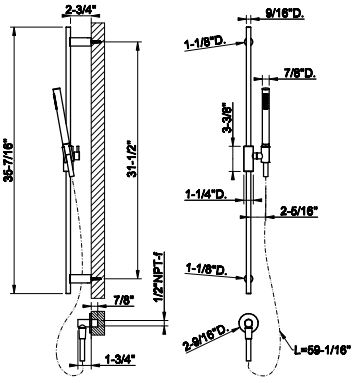



32971

Round body spray
- 1/2” connections
- Max flow rate 1 GPM at 60 PSI

031	Chrome	552	726	Warm Bronze Br. PVD	873
149	Finox Br. Nickel	746	710	Brass PVD	840
299	Matte Black	746	727	Brass Br. PVD	873
147	Chrome Br.	766	246	Gold PVD	929
720	Nickel PVD	818	716	Gold Br. PVD	929
706	Black Metal PVD	818	845	Dark Bronze	873
707	Black Metal Br. PVD	873	187	Aged Bronze	873
030	Copper PVD	818	713	Antique Brass	873
708	Copper Br. PVD	873	279	Matte White	746
735	Warm Bronze PVD	840			

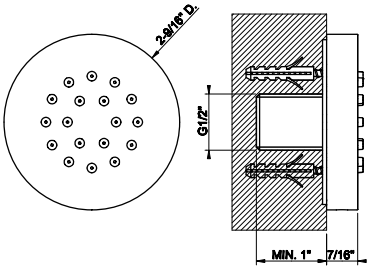

VENTAGLIO

32985+32982

32985

In-wall rough valve for pivotable body spray 32982

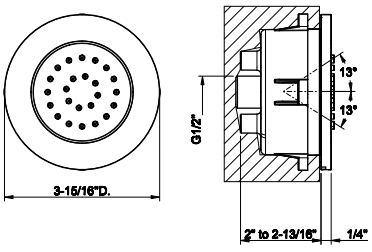



031	Chrome	406

32982

TRIM PARTS ONLY Round in-wall pivotable body spray
- 1/2" connections
- Requires in-wall rough valve 32985
- Max flow rate 1 GPM at60 PSI

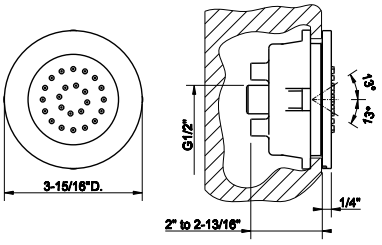



031	Chrome	773	726	Warm Bronze Br. PVD	1.223
149	Finox Br. Nickel	1.045	710	Brass PVD	1.145
299	Matte Black	1.045	727	Brass Br. PVD	1.223
147	Chrome Br.	1.045	246	Gold PVD	1.300
720	Nickel PVD	1.145	716	Gold Br. PVD	1.300
706	Black Metal PVD	1.145	845	Dark Bronze	1.223
707	Black Metal Br. PVD	1.223	187	Aged Bronze	1.223
030	Copper PVD	1.145	713	Antique Brass	1.223
708	Copper Br. PVD	1.223	279	Matte White	1.045
735	Warm Bronze PVD	1.145			

13375

Pivotable body spray
- 1/2" connections
- Max flow rate 0.9 GPM at 60 PSI

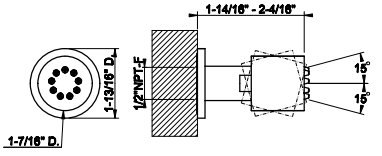



031	Chrome	405	726	Warm Bronze Br. PVD	639
149	Finox Br. Nickel	547	710	Brass PVD	598
299	Matte Black	547	727	Brass Br. PVD	639
147	Chrome Br.	547	246	Gold PVD	680
720	Nickel PVD	598	716	Gold Br. PVD	680
706	Black Metal PVD	598	845	Dark Bronze	639
707	Black Metal Br. PVD	639	187	Aged Bronze	639
030	Copper PVD	598	713	Antique Brass	639
708	Copper Br. PVD	639	279	Matte White	547
735	Warm Bronze PVD	598			

65295

Wall-fixing cascade spout
- 1/2" connections
- Flow rate 4.8 GPM at 60 PSI

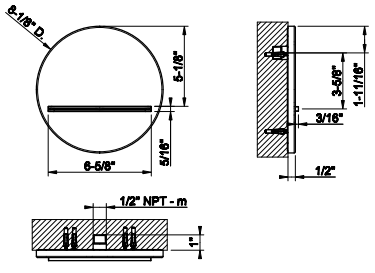

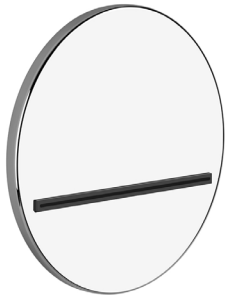

031	Chrome	1.937	726	Warm Bronze Br. PVD	3.058
149	Finox Br. Nickel	2.614	710	Brass PVD	2.864
299	Matte Black	2.614	727	Brass Br. PVD	3.058
720	Nickel PVD	2.864	246	Gold PVD	3.255
706	Black Metal PVD	2.864	716	Gold Br. PVD	3.255
707	Black Metal Br. PVD	3.058	845	Dark Bronze	3.058
030	Copper PVD	2.864	187	Aged Bronze	3.058
708	Copper Br. PVD	3.058	713	Antique Brass	3.058
735	Warm Bronze PVD	2.864	279	Matte White	2.614



63329

Handshower set
- Fixed hook
- Wall elbow
- 59” flex hose
- Max flow rate 1.75 GPM

031	Chrome	847	735	Warm Bronze PVD	1.254
149	Finox Br. Nickel	1.141	726	Warm Bronze Br. PVD	1.337
299	Matte Black	1.141	710	Brass PVD	1.254
720	Nickel PVD	1.254	727	Brass Br. PVD	1.337
706	Black Metal PVD	1.254	845	Dark Bronze	1.337
707	Black Metal Br. PVD	1.337	187	Aged Bronze	1.337
030	Copper PVD	1.254	713	Antique Brass	1.337
708	Copper Br. PVD	1.337			

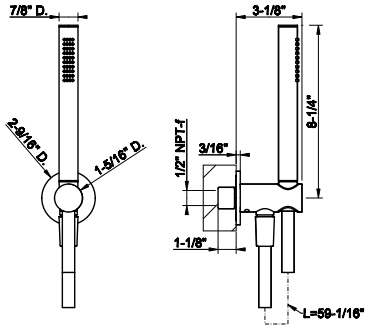



63099

Magnetic anti-limestone handshower set
- Fixed hook
- Wall elbow
- 59” Cromalux flex hose
- Max flow rate 1.75 GPM

031	Chrome	1.213	726	Warm Bronze Br. PVD	1.916
149	Finox Br. Nickel	1.638	710	Brass PVD	1.794
299	Matte Black	1.638	727	Brass Br. PVD	1.916
720	Nickel PVD	1.794	246	Gold PVD	2.037
706	Black Metal PVD	1.794	716	Gold Br. PVD	2.037
707	Black Metal Br. PVD	1.916	845	Dark Bronze	1.916
030	Copper PVD	1.794	187	Aged Bronze	1.916
708	Copper Br. PVD	1.916	713	Antique Brass	1.916
735	Warm Bronze PVD	1.794			

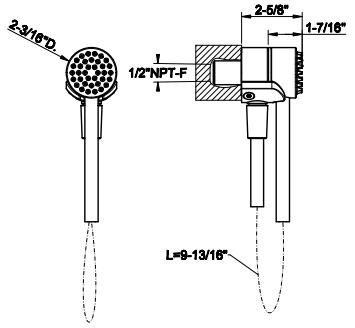

63461

Wall elbow with built in water intake and fixed hook
- 1/2” connection



031	Chrome	457	735	Warm Bronze PVD	677
149	Finox Br. Nickel	617	726	Warm Bronze Br. PVD	723
299	Matte Black	617	710	Brass PVD	677
720	Nickel PVD	677	727	Brass Br. PVD	723
706	Black Metal PVD	677	845	Dark Bronze	723
707	Black Metal Br. PVD	723	187	Aged Bronze	723
030	Copper PVD	677	713	Antique Brass	723
708	Copper Br. PVD	723			

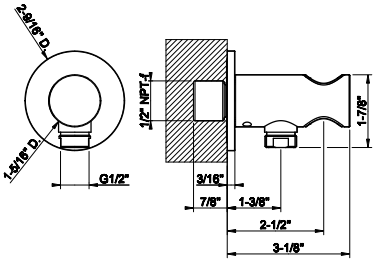

63469

Wall-elbow with backplate
- 1/2” connection



031	Chrome	298	735	Warm Bronze PVD	443
149	Finox Br. Nickel	404	726	Warm Bronze Br. PVD	472
299	Matte Black	404	710	Brass PVD	443
720	Nickel PVD	443	727	Brass Br. PVD	472
706	Black Metal PVD	443	845	Dark Bronze	472
707	Black Metal Br. PVD	472	187	Aged Bronze	472
030	Copper PVD	443	713	Antique Brass	472
708	Copper Br. PVD	472			

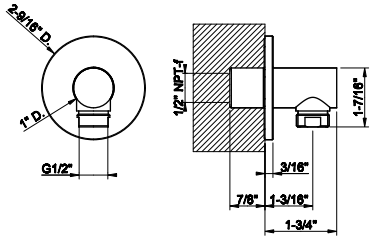

VENTAGLIO

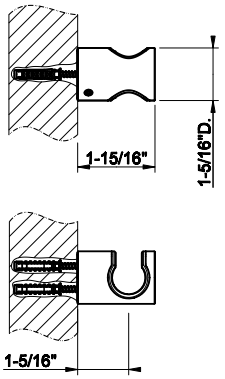

58157

Fixed handshower hook.



031	Chrome	245	735	Warm Bronze PVD	363
149	Finox Br. Nickel	332	726	Warm Bronze Br. PVD	387
299	Matte Black	332	710	Brass PVD	363
720	Nickel PVD	363	727	Brass Br. PVD	387
706	Black Metal PVD	363	845	Dark Bronze	387
707	Black Metal Br. PVD	387	187	Aged Bronze	387
030	Copper PVD	363	713	Antique Brass	387
708	Copper Br. PVD	387			

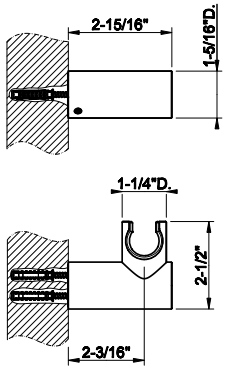

58160

Adjustable handshower hook.



149	Finox Br. Nickel	586	735	Warm Bronze PVD	642
299	Matte Black	586	726	Warm Bronze Br. PVD	686
720	Nickel PVD	642	710	Brass PVD	642
706	Black Metal PVD	642	727	Brass Br. PVD	686
707	Black Metal Br. PVD	686	845	Dark Bronze	686
030	Copper PVD	642	187	Aged Bronze	686
708	Copper Br. PVD	686	713	Antique Brass	686

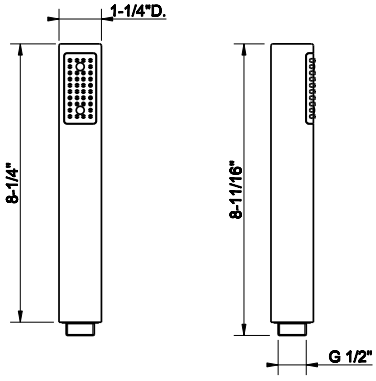

14372

Handshower
- Max flow rate 1.75 GPM



031	Chrome	134	726	Warm Bronze Br. PVD	394
149	Finox Br. Nickel	317	710	Brass PVD	371
299	Matte Black	225	727	Brass Br. PVD	394
720	Nickel PVD	371	246	Gold PVD	418
706	Black Metal PVD	371	716	Gold Br. PVD	418
707	Black Metal Br. PVD	394	845	Dark Bronze	394
030	Copper PVD	371	187	Aged Bronze	394
708	Copper Br. PVD	394	713	Antique Brass	394
735	Warm Bronze PVD	371	279	Matte White	317

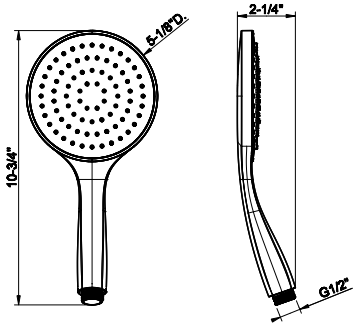

14370

Antilimestone handshower
- Single spray
- Max flow rate 1.75 GPM



031	Chrome	189	726	Warm Bronze Br. PVD	465
149	Finox Br. Nickel	377	710	Brass PVD	435
299	Matte Black	377	727	Brass Br. PVD	465
147	Chrome Br.	377	246	Gold PVD	493
720	Nickel PVD	435	716	Gold Br. PVD	493
706	Black Metal PVD	435	845	Dark Bronze	465
707	Black Metal Br. PVD	465	187	Aged Bronze	465
030	Copper PVD	435	713	Antique Brass	465
708	Copper Br. PVD	465	279	Matte White	377
735	Warm Bronze PVD	435			

VENTAGLIO



14376

Handshower with white insert
- 3-pattern spray
- Max flow rate 1.75 GPM

031	Chrome	390	726	Warm Bronze Br. PVD	656
149	Finox Br. Nickel	527	710	Brass PVD	616
299	Matte Black	527	727	Brass Br. PVD	656
147	Chrome Br.	527	246	Gold PVD	681
720	Nickel PVD	616	716	Gold Br. PVD	681
706	Black Metal PVD	616	845	Dark Bronze	656
707	Black Metal Br. PVD	656	187	Aged Bronze	656
030	Copper PVD	616	713	Antique Brass	656
708	Copper Br. PVD	656	279	Matte White	527
735	Warm Bronze PVD	616			

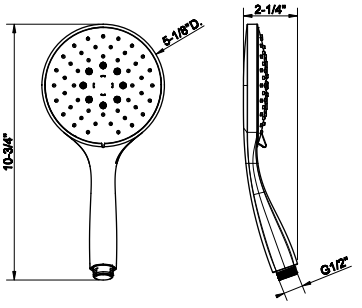

01637

59” flex hose



031	Chrome	134	726	Warm Bronze Br. PVD	214
149	Finox Br. Nickel	173	710	Brass PVD	203
299	Matte Black	173	727	Brass Br. PVD	214
147	Chrome Br.	173	246	Gold PVD	227
720	Nickel PVD	203	716	Gold Br. PVD	227
706	Black Metal PVD	203	845	Dark Bronze	214
707	Black Metal Br. PVD	214	187	Aged Bronze	214
030	Copper PVD	203	713	Antique Brass	214
708	Copper Br. PVD	214	279	Matte White	173
735	Warm Bronze PVD	203			

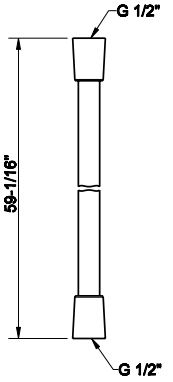

54137

59” black flex hose with options to change the metal ends with desired finish



031	Chrome	183	735	Warm Bronze PVD	290
239	Steel Br.	179	726	Warm Bronze Br. PVD	283
299	Matte Black	241	710	Brass PVD	290
720	Nickel PVD	248	727	Brass Br. PVD	283
706	Black Metal PVD	290	845	Dark Bronze	248
707	Black Metal Br. PVD	283	187	Aged Bronze	248
030	Copper PVD	290	713	Antique Brass	248
708	Copper Br. PVD	283			

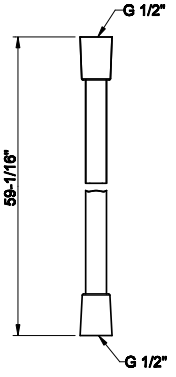

01724

Metal flexible hose, 59” length, 1/2” connector.



031	Chrome	196	726	Warm Bronze Br. PVD	308
149	Finox Br. Nickel	260	710	Brass PVD	288
299	Matte Black	260	727	Brass Br. PVD	308
147	Chrome Br.	260	246	Gold PVD	288
720	Nickel PVD	308	716	Gold Br. PVD	341
706	Black Metal PVD	288	845	Dark Bronze	308
707	Black Metal Br. PVD	308	187	Aged Bronze	308
030	Copper PVD	288	713	Antique Brass	308
708	Copper Br. PVD	308	279	Matte White	259
735	Warm Bronze PVD	288			

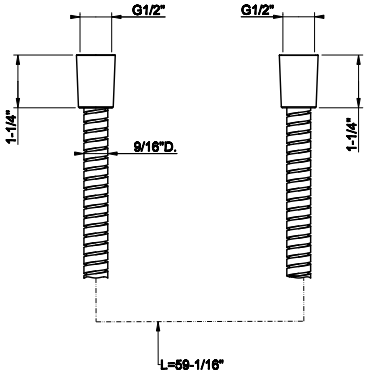



VENTAGLIO
ACCESSORIES

63601

Wall-mounted white soap holder



031	Chrome	383	726	Warm Bronze Br. PVD	605
149	Finox Br. Nickel	516	710	Brass PVD	565
299	Matte Black	516	727	Brass Br. PVD	605
720	Nickel PVD	565	246	Gold PVD	644
706	Black Metal PVD	565	716	Gold Br. PVD	644
707	Black Metal Br. PVD	605	845	Dark Bronze	605
030	Copper PVD	565	187	Aged Bronze	605
708	Copper Br. PVD	605	713	Antique Brass	605
735	Warm Bronze PVD	565	279	Matte White	516

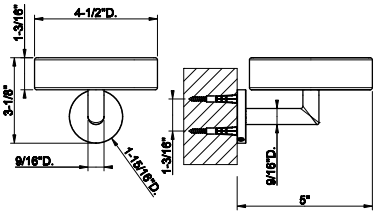

63602

Wall-mounted black soap holder



031	Chrome	383	726	Warm Bronze Br. PVD	605
149	Finox Br. Nickel	516	710	Brass PVD	565
299	Matte Black	516	727	Brass Br. PVD	605
720	Nickel PVD	565	246	Gold PVD	644
706	Black Metal PVD	565	716	Gold Br. PVD	644
707	Black Metal Br. PVD	605	845	Dark Bronze	605
030	Copper PVD	565	187	Aged Bronze	605
708	Copper Br. PVD	605	713	Antique Brass	605
735	Warm Bronze PVD	565	279	Matte White	516

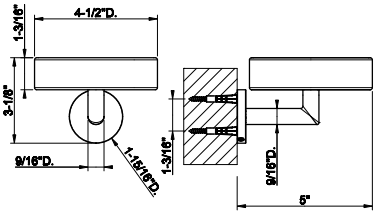

63607

Wall-mounted white tumbler holder



031	Chrome	418	726	Warm Bronze Br. PVD	663
149	Finox Br. Nickel	565	710	Brass PVD	620
299	Matte Black	565	727	Brass Br. PVD	663
720	Nickel PVD	620	246	Gold PVD	702
706	Black Metal PVD	620	716	Gold Br. PVD	702
707	Black Metal Br. PVD	663	845	Dark Bronze	663
030	Copper PVD	620	187	Aged Bronze	663
708	Copper Br. PVD	663	713	Antique Brass	663
735	Warm Bronze PVD	620	279	Matte White	565

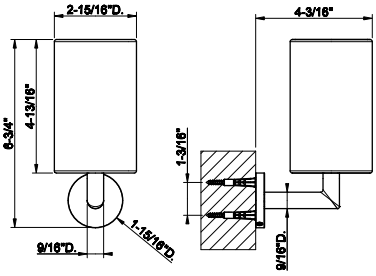

63608

Wall-mounted black tumbler holder



031	Chrome	418	726	Warm Bronze Br. PVD	663
149	Finox Br. Nickel	565	710	Brass PVD	620
299	Matte Black	565	727	Brass Br. PVD	663
720	Nickel PVD	620	246	Gold PVD	702
706	Black Metal PVD	620	716	Gold Br. PVD	702
707	Black Metal Br. PVD	663	845	Dark Bronze	663
030	Copper PVD	620	187	Aged Bronze	663
708	Copper Br. PVD	663	713	Antique Brass	663
735	Warm Bronze PVD	620	279	Matte White	565

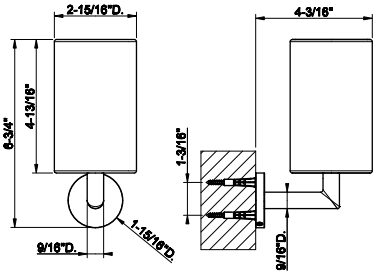

VENTAGLIO ACCESSORIES

63613

Wall-mounted white dispenser

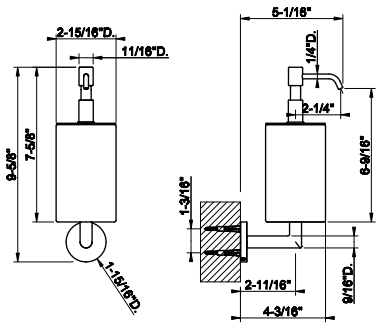



031	Chrome	687	726	Warm Bronze Br. PVD	1.084
149	Finox Br. Nickel	927	710	Brass PVD	1.017
299	Matte Black	927	727	Brass Br. PVD	1.084
720	Nickel PVD	1.017	246	Gold PVD	1.154
706	Black Metal PVD	1.017	716	Gold Br. PVD	1.154
707	Black Metal Br. PVD	1.084	845	Dark Bronze	1.084
030	Copper PVD	1.017	187	Aged Bronze	1.084
708	Copper Br. PVD	1.084	713	Antique Brass	1.084
735	Warm Bronze PVD	1.017	279	Matte White	927

63614

Wall-mounted black dispenser

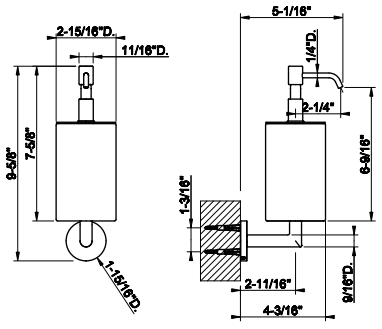



031	Chrome	687	726	Warm Bronze Br. PVD	1.084
149	Finox Br. Nickel	927	710	Brass PVD	1.017
299	Matte Black	927	727	Brass Br. PVD	1.084
720	Nickel PVD	1.017	246	Gold PVD	1.154
706	Black Metal PVD	1.017	716	Gold Br. PVD	1.154
707	Black Metal Br. PVD	1.084	845	Dark Bronze	1.084
030	Copper PVD	1.017	187	Aged Bronze	1.084
708	Copper Br. PVD	1.084	713	Antique Brass	1.084
735	Warm Bronze PVD	1.017	279	Matte White	927

63619

Wall-mounted white toilet brush holder

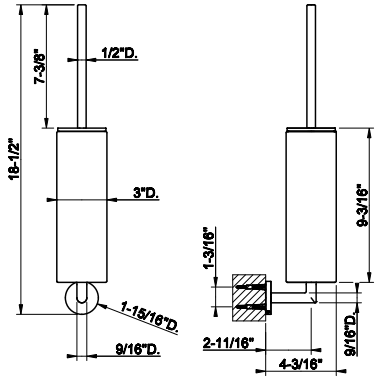



031	Chrome	655	726	Warm Bronze Br. PVD	1.034
149	Finox Br. Nickel	885	710	Brass PVD	969
299	Matte Black	885	727	Brass Br. PVD	1.034
720	Nickel PVD	969	246	Gold PVD	1.101
706	Black Metal PVD	969	716	Gold Br. PVD	1.101
707	Black Metal Br. PVD	1.034	845	Dark Bronze	1.034
030	Copper PVD	969	187	Aged Bronze	1.034
708	Copper Br. PVD	1.034	713	Antique Brass	1.034
735	Warm Bronze PVD	969	279	Matte White	885

63620

Wall-mounted black toilet brush holder

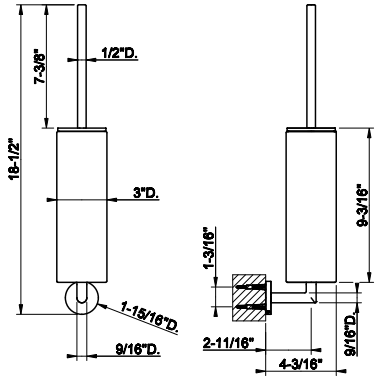



031	Chrome	655	726	Warm Bronze Br. PVD	1.034
149	Finox Br. Nickel	885	710	Brass PVD	969
299	Matte Black	885	727	Brass Br. PVD	1.034
720	Nickel PVD	969	246	Gold PVD	1.101
706	Black Metal PVD	969	716	Gold Br. PVD	1.101
707	Black Metal Br. PVD	1.034	845	Dark Bronze	1.034
030	Copper PVD	969	187	Aged Bronze	1.034
708	Copper Br. PVD	1.034	713	Antique Brass	1.034
735	Warm Bronze PVD	969	279	Matte White	885

58525

Standing soap holder, white



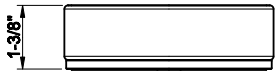

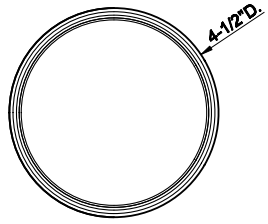

031	Chrome	391	726	Warm Bronze Br. PVD	618
149	Finox Br. Nickel	528	710	Brass PVD	580
299	Matte Black	528	727	Brass Br. PVD	618
720	Nickel PVD	580	246	Gold PVD	658
706	Black Metal PVD	580	716	Gold Br. PVD	658
707	Black Metal Br. PVD	618	845	Dark Bronze	618
030	Copper PVD	580	187	Aged Bronze	618
708	Copper Br. PVD	618	713	Antique Brass	618
735	Warm Bronze PVD	580	279	Matte White	528

58526

Standing soap holder, black



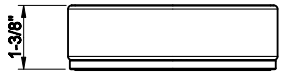

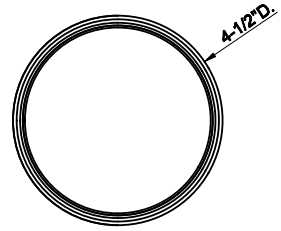

031	Chrome	391	726	Warm Bronze Br. PVD	618
149	Finox Br. Nickel	528	710	Brass PVD	580
299	Matte Black	528	727	Brass Br. PVD	618
720	Nickel PVD	580	246	Gold PVD	658
706	Black Metal PVD	580	716	Gold Br. PVD	658
707	Black Metal Br. PVD	618	845	Dark Bronze	618
030	Copper PVD	580	187	Aged Bronze	618
708	Copper Br. PVD	618	713	Antique Brass	618
735	Warm Bronze PVD	580	279	Matte White	528

58531

Standing tumbler holder, white



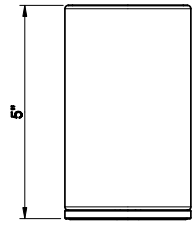

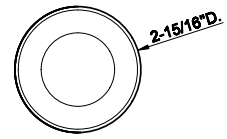

031	Chrome	436	726	Warm Bronze Br. PVD	689
149	Finox Br. Nickel	590	710	Brass PVD	647
299	Matte Black	590	727	Brass Br. PVD	689
720	Nickel PVD	647	246	Gold PVD	733
706	Black Metal PVD	647	716	Gold Br. PVD	733
707	Black Metal Br. PVD	689	845	Dark Bronze	689
030	Copper PVD	647	187	Aged Bronze	689
708	Copper Br. PVD	689	713	Antique Brass	689
735	Warm Bronze PVD	647	279	Matte White	590

58532

Standing tumbler holder, black



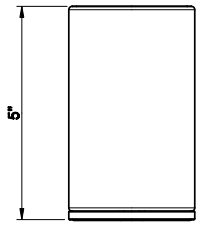

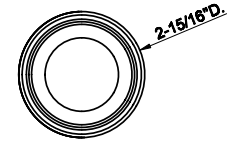

031	Chrome	436	726	Warm Bronze Br. PVD	689
149	Finox Br. Nickel	590	710	Brass PVD	647
299	Matte Black	590	727	Brass Br. PVD	689
720	Nickel PVD	647	246	Gold PVD	733
706	Black Metal PVD	647	716	Gold Br. PVD	733
707	Black Metal Br. PVD	689	845	Dark Bronze	689
030	Copper PVD	647	187	Aged Bronze	689
708	Copper Br. PVD	689	713	Antique Brass	689
735	Warm Bronze PVD	647	279	Matte White	590

VENTAGLIO ACCESSORIES

66437

Standing soap dispenser holder, white

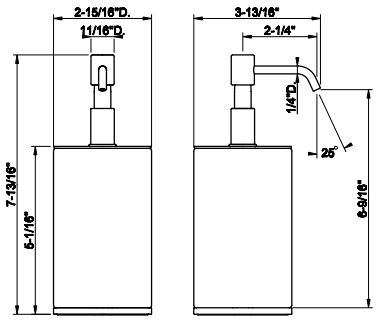

031	Chrome	726	726	Warm Bronze Br. PVD	1.148
149	Finox Br. Nickel	980	710	Brass PVD	1.076
299	Matte Black	980	727	Brass Br. PVD	1.148
720	Nickel PVD	1.076	246	Gold PVD	1.221
706	Black Metal PVD	1.076	716	Gold Br. PVD	1.221
707	Black Metal Br. PVD	1.148	845	Dark Bronze	1.148
030	Copper PVD	1.076	187	Aged Bronze	1.148
708	Copper Br. PVD	1.148	713	Antique Brass	1.148
735	Warm Bronze PVD	1.076	279	Matte White	980



66438

Standing soap dispenser holder, black

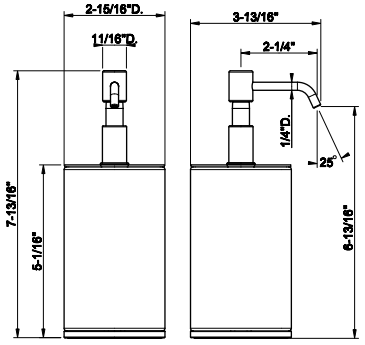

031	Chrome	726	726	Warm Bronze Br. PVD	1.148
149	Finox Br. Nickel	980	710	Brass PVD	1.076
299	Matte Black	980	727	Brass Br. PVD	1.148
720	Nickel PVD	1.076	246	Gold PVD	1.221
706	Black Metal PVD	1.076	716	Gold Br. PVD	1.221
707	Black Metal Br. PVD	1.148	845	Dark Bronze	1.148
030	Copper PVD	1.076	187	Aged Bronze	1.148
708	Copper Br. PVD	1.148	713	Antique Brass	1.148
735	Warm Bronze PVD	1.076	279	Matte White	980



63743

Standing brush holder, white

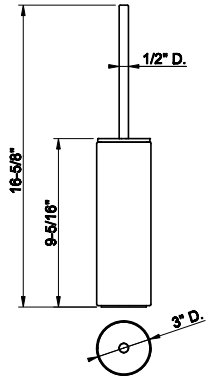

031	Chrome	595	726	Warm Bronze Br. PVD	939
149	Finox Br. Nickel	802	710	Brass PVD	883
299	Matte Black	802	727	Brass Br. PVD	939
720	Nickel PVD	883	246	Gold PVD	1.000
706	Black Metal PVD	883	716	Gold Br. PVD	1.000
707	Black Metal Br. PVD	939	845	Dark Bronze	939
030	Copper PVD	883	187	Aged Bronze	939
708	Copper Br. PVD	939	713	Antique Brass	939
735	Warm Bronze PVD	883	279	Matte White	802



63744

Standing brush holder, black

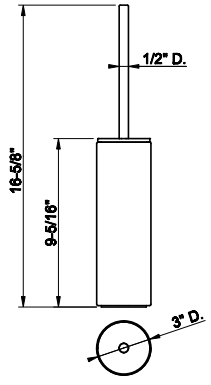

031	Chrome	595	726	Warm Bronze Br. PVD	939
149	Finox Br. Nickel	802	710	Brass PVD	883
299	Matte Black	802	727	Brass Br. PVD	939
720	Nickel PVD	883	246	Gold PVD	1.000
706	Black Metal PVD	883	716	Gold Br. PVD	1.000
707	Black Metal Br. PVD	939	845	Dark Bronze	939
030	Copper PVD	883	187	Aged Bronze	939
708	Copper Br. PVD	939	713	Antique Brass	939
735	Warm Bronze PVD	883	279	Matte White	802



63655

Wall-mounted paper roll holder



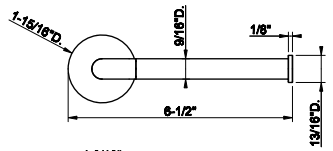

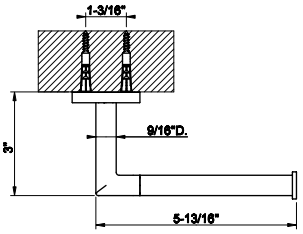

031	Chrome	235	726	Warm Bronze Br. PVD	373
149	Finox Br. Nickel	320	710	Brass PVD	348
299	Matte Black	320	727	Brass Br. PVD	373
720	Nickel PVD	348	246	Gold PVD	395
706	Black Metal PVD	348	716	Gold Br. PVD	395
707	Black Metal Br. PVD	373	845	Dark Bronze	373
030	Copper PVD	348	187	Aged Bronze	373
708	Copper Br. PVD	373	713	Antique Brass	373
735	Warm Bronze PVD	348	279	Matte White	320

63697

12” Towel rail



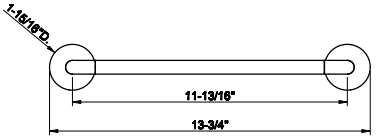

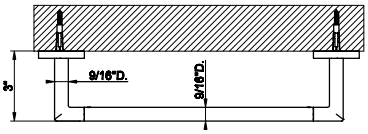

031	Chrome	322	726	Warm Bronze Br. PVD	508
149	Finox Br. Nickel	435	710	Brass PVD	478
299	Matte Black	435	727	Brass Br. PVD	508
720	Nickel PVD	478	246	Gold PVD	542
706	Black Metal PVD	478	716	Gold Br. PVD	542
707	Black Metal Br. PVD	508	845	Dark Bronze	508
030	Copper PVD	478	187	Aged Bronze	508
708	Copper Br. PVD	508	713	Antique Brass	508
735	Warm Bronze PVD	478	279	Matte White	435

63700

18” Towel rail



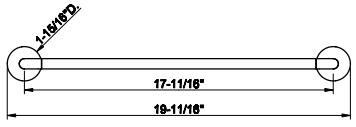

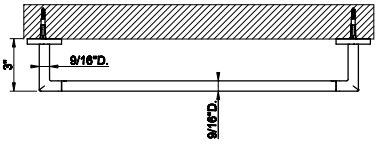

031	Chrome	390	726	Warm Bronze Br. PVD	615
149	Finox Br. Nickel	525	710	Brass PVD	578
299	Matte Black	525	727	Brass Br. PVD	615
720	Nickel PVD	578	246	Gold PVD	657
706	Black Metal PVD	578	716	Gold Br. PVD	657
707	Black Metal Br. PVD	615	845	Dark Bronze	615
030	Copper PVD	578	187	Aged Bronze	615
708	Copper Br. PVD	615	713	Antique Brass	615
735	Warm Bronze PVD	578	279	Matte White	525

63703

24” Towel rail



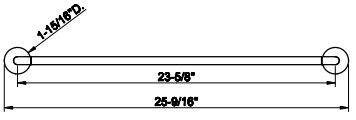

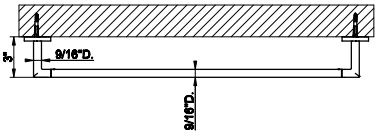

031	Chrome	428	726	Warm Bronze Br. PVD	672
149	Finox Br. Nickel	575	710	Brass PVD	630
299	Matte Black	575	727	Brass Br. PVD	672
720	Nickel PVD	630	246	Gold PVD	719
706	Black Metal PVD	630	716	Gold Br. PVD	719
707	Black Metal Br. PVD	672	845	Dark Bronze	672
030	Copper PVD	630	187	Aged Bronze	672
708	Copper Br. PVD	672	713	Antique Brass	672
735	Warm Bronze PVD	630	279	Matte White	575

VENTAGLIO ACCESSORIES

63709

Towel ring

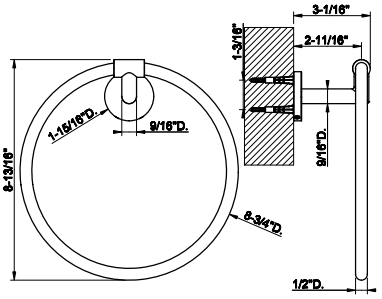



031	Chrome	413	726	Warm Bronze Br. PVD	655
149	Finox Br. Nickel	557	710	Brass PVD	612
299	Matte Black	557	727	Brass Br. PVD	655
720	Nickel PVD	612	246	Gold PVD	695
706	Black Metal PVD	612	716	Gold Br. PVD	695
707	Black Metal Br. PVD	655	845	Dark Bronze	655
030	Copper PVD	612	187	Aged Bronze	655
708	Copper Br. PVD	655	713	Antique Brass	655
735	Warm Bronze PVD	612	279	Matte White	557

72521

Wall-mounted robe hook.

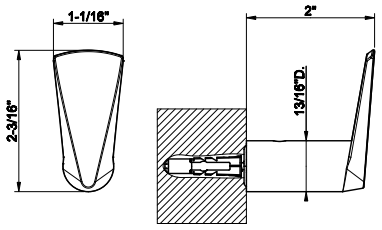



031	Chrome	167	708	Copper Br. PVD	264
149	Finox Br. Nickel	226	735	Warm Bronze PVD	248
299	Matte Black	226	726	Warm Bronze Br. PVD	264
720	Nickel PVD	248	710	Brass PVD	248
706	Black Metal PVD	248	727	Brass Br. PVD	264
707	Black Metal Br. PVD	264	845	Dark Bronze	264
030	Copper PVD	248			

63724

Towel rail for glass fixing - 12" Length

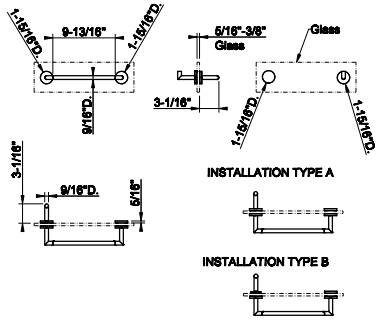



031	Chrome	687	726	Warm Bronze Br. PVD	1.084
149	Finox Br. Nickel	927	710	Brass PVD	1.017
299	Matte Black	927	727	Brass Br. PVD	1.084
720	Nickel PVD	1.017	246	Gold PVD	1.154
706	Black Metal PVD	1.017	716	Gold Br. PVD	1.154
707	Black Metal Br. PVD	1.084	845	Dark Bronze	1.084
030	Copper PVD	1.017	187	Aged Bronze	1.084
708	Copper Br. PVD	1.084	713	Antique Brass	1.084
735	Warm Bronze PVD	1.017	279	Matte White	927

63726

Towel rail for glass fixing - 18" Length

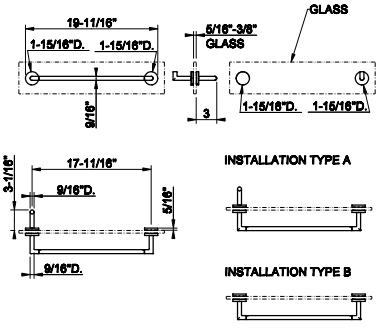

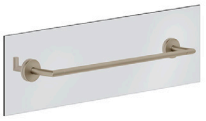

031	Chrome	757	726	Warm Bronze Br. PVD	1.196
149	Finox Br. Nickel	1.022	710	Brass PVD	1.122
299	Matte Black	1.022	727	Brass Br. PVD	1.196
720	Nickel PVD	1.122	246	Gold PVD	1.274
706	Black Metal PVD	1.122	716	Gold Br. PVD	1.274
707	Black Metal Br. PVD	1.196	845	Dark Bronze	1.196
030	Copper PVD	1.122	187	Aged Bronze	1.196
708	Copper Br. PVD	1.196	713	Antique Brass	1.196
735	Warm Bronze PVD	1.122	279	Matte White	1.022

63728

Towel rail for glass fixing - 24” Length



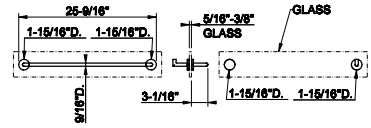

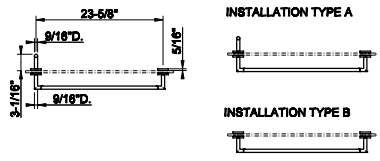

031	Chrome	792	726	Warm Bronze Br. PVD	1.248
149	Finox Br. Nickel	1.069	710	Brass PVD	1.171
299	Matte Black	1.069	727	Brass Br. PVD	1.248
720	Nickel PVD	1.171	246	Gold PVD	1.330
706	Black Metal PVD	1.171	716	Gold Br. PVD	1.330
707	Black Metal Br. PVD	1.248	845	Dark Bronze	1.248
030	Copper PVD	1.171	187	Aged Bronze	1.248
708	Copper Br. PVD	1.248	713	Antique Brass	1.248
735	Warm Bronze PVD	1.171	279	Matte White	1.069

45590

White waste-paper basket



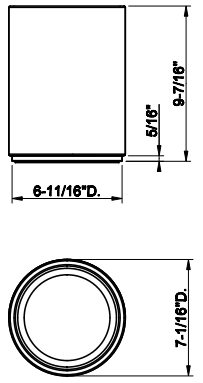

031	Chrome	1.056	726	Warm Bronze Br. PVD	1.663
149	Finox Br. Nickel	1.369	710	Brass PVD	1.559
299	Matte Black	1.316	727	Brass Br. PVD	1.663
720	Nickel PVD	1.559	246	Gold PVD	1.775
706	Black Metal PVD	1.559	716	Gold Br. PVD	1.775
707	Black Metal Br. PVD	1.663	845	Dark Bronze	1.663
030	Copper PVD	1.559	187	Aged Bronze	1.663
708	Copper Br. PVD	1.663	713	Antique Brass	1.663
735	Warm Bronze PVD	1.559	279	Matte White	1.316

58424

Safety grip-handle for bathtub and shower enclosure
• 18” length



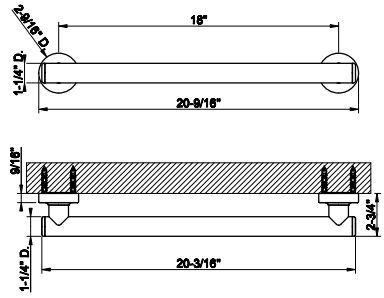

031	Chrome	1.932	726	Warm Bronze Br. PVD	3.054
149	Finox Br. Nickel	2.611	710	Brass PVD	2.862
299	Matte Black	2.611	727	Brass Br. PVD	3.056
720	Nickel PVD	2.862	246	Gold PVD	3.243
706	Black Metal PVD	2.862	716	Gold Br. PVD	3.243
707	Black Metal Br. PVD	3.056	845	Dark Bronze	3.056
030	Copper PVD	2.862	187	Aged Bronze	3.056
708	Copper Br. PVD	3.056	713	Antique Brass	3.056
735	Warm Bronze PVD	2.862	279	Matte White	2.611

58430

Safety grip-handle for bathtub and shower enclosure
• 24” length



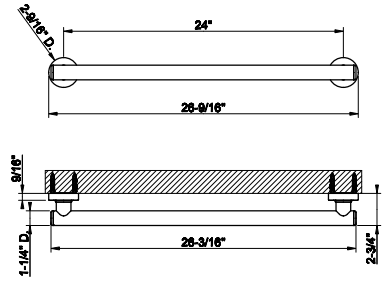

031	Chrome	1.967	726	Warm Bronze Br. PVD	3.108
149	Finox Br. Nickel	2.656	710	Brass PVD	2.911
299	Matte Black	2.656	727	Brass Br. PVD	3.108
720	Nickel PVD	2.911	246	Gold PVD	3.304
706	Black Metal PVD	2.911	716	Gold Br. PVD	3.304
707	Black Metal Br. PVD	3.108	845	Dark Bronze	3.108
030	Copper PVD	2.911	187	Aged Bronze	3.108
708	Copper Br. PVD	3.108	713	Antique Brass	3.108
735	Warm Bronze PVD	2.911	279	Matte White	2.656

VENTAGLIO ACCESSORIES

58432

Safety grip-handle for bathtub and shower enclosure
• 36” length

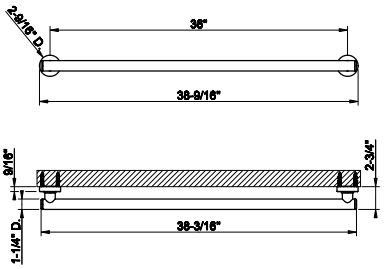

031	Chrome	2.165	726	Warm Bronze Br. PVD	3.419
149	Finox Br. Nickel	2.921	710	Brass PVD	3.203
299	Matte Black	2.921	727	Brass Br. PVD	3.419
720	Nickel PVD	3.203	246	Gold PVD	3.637
706	Black Metal PVD	3.203	716	Gold Br. PVD	3.637
707	Black Metal Br. PVD	3.419	845	Dark Bronze	3.419
030	Copper PVD	3.203	187	Aged Bronze	3.419
708	Copper Br. PVD	3.419	713	Antique Brass	3.419
735	Warm Bronze PVD	3.203	279	Matte White	2.921




GESSI®
VENTAGLIO
VENTAGLIO
TOTAL LOOK

54611



Flush Actuator Plate
•Stainless steel
•Compatible with GEBERIT models: 111.597.001, 111.902.005, 111.798.00.1, 111.335.00.5
•Without visible fixing system

031	Chrome	1.228	708	Copper Br. PVD	1.813
239	Steel Br.	1.228	735	Warm Bronze PVD	1.813
275	Matte Cipria	1.653	726	Warm Bronze Br. PVD	1.813
273	Matte Greige	1.653	710	Brass PVD	1.813
280	Matte Ocra	1.653	727	Brass Br. PVD	1.813
281	Matte Coral	1.653	246	Gold PVD	2.058
276	Matte Agave	1.653	716	Gold Br. PVD	2.058
299	Matte Black	1.653	845	Dark Bronze	1.813
720	Nickel PVD	1.813	187	Aged Bronze	1.813
706	Black Metal PVD	1.813	713	Antique Brass	1.813
707	Black Metal Br. PVD	1.813	279	Matte White	1.653
030	Copper PVD	1.813			

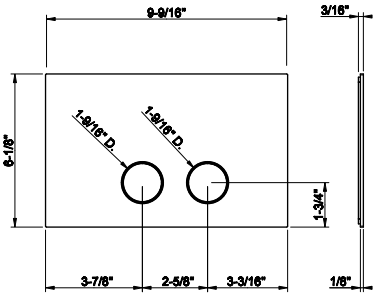

54601



Counter washbasin In stainless steel, without overflow waste. Without basin waste. It can be combined with waste 54597.

239	Steel Br.	2.449	708	Copper Br. PVD	6.986
299	Matte Black	4.431	726	Warm Bronze Br. PVD	6.986
707	Black Metal Br. PVD	6.986	727	Brass Br. PVD	6.986

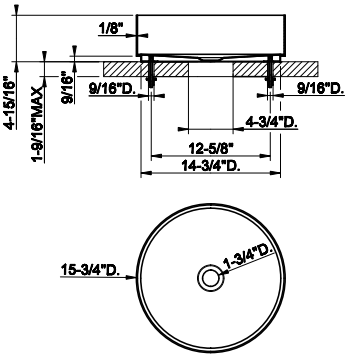

01578



Undermounted washbasin brackets for 54601, 54605, 54606.

031	Chrome	428

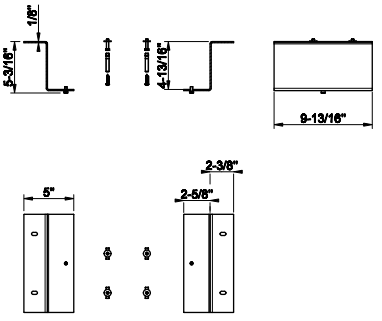

54597



1 1/4" push drain with or without overflow feature
- Recommended for Gessi 316 Collection

239	Steel Br.	212	708	Copper Br. PVD	313
299	Matte Black	287	726	Warm Bronze Br. PVD	313
707	Black Metal Br. PVD	313	727	Brass Br. PVD	313

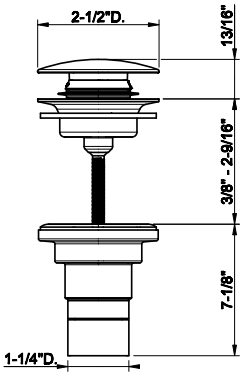

VENTAGLIO TOTAL LOOK

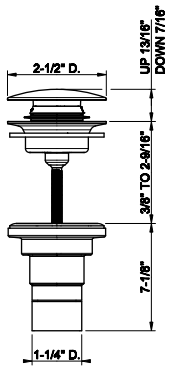

01427

1 1/4" push drain with or without overflow feature



031	Chrome	134	030	Copper PVD	379
239	Steel Br.	134	708	Copper Br. PVD	379
275	Matte Cipria	326	735	Warm Bronze PVD	379
273	Matte Greige	326	726	Warm Bronze Br. PVD	379
277	Glossy Ocra	326	710	Brass PVD	379
278	Glossy Coral	326	727	Brass Br. PVD	379
276	Matte Agave	326	246	Gold PVD	405
299	Matte Black	386	716	Gold Br. PVD	405
720	Nickel PVD	379	845	Dark Bronze	379
706	Black Metal PVD	379	187	Aged Bronze	379
707	Black Metal Br. PVD	379	713	Antique Brass	379

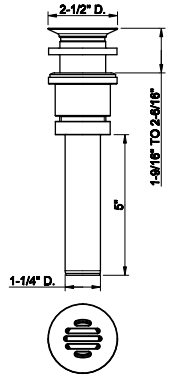

01314

Grille free-flow waste



031	Chrome	289

GESSI



ORIGINI

GESSI

WARM

1



275
CIPRIA

2



726
WARM BRONZE
BRUSHED PVD

3



845
DARK BRONZE

4



287
WARM
ART INSERT

A

275

CIPRIA



BASIN



A1
66002#275



A2
66002#275
66600#726



A3
66002#275
66600#845



A4
66002#275
66602#287

GESSI

B
726

BASIN
SHOWER
BATHTUB
ACCESSORIES
FLUSH PLATES

WARM BRONZE BRUSHED PVD



B1
66002#726
66600#275



B2
66002#726



B3
66002#726
66600#845



B4
66002#726
66602#287

C
845

BASIN
SHOWER
BATHTUB
ACCESSORIES
FLUSH PLATES

DARK BRONZE

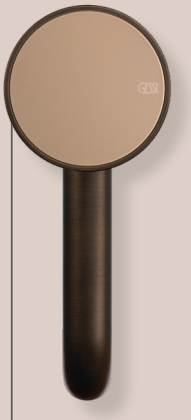

C1
66002#845
66600#275



C2
66002#845
66600#726



C3
66002#845



C4
66002#845
66602#287

GESSI

NEUTRAL

1



273
GREIGE

2



149
FINOX
BRUSHED NICKEL

3



720
NICKEL PVD

4

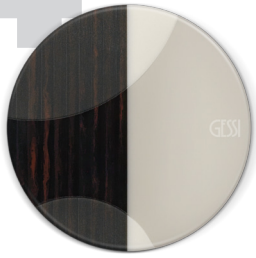

286
NEUTRAL
ART INSERT

A GREIGE

273





A1
66002#273



A2
66002#273
66600#149



A3
66002#273
66600#720



A4
66002#273
66602#286

B

149

FINOX BRUSHED NICKEL

BASIN

SHOWER

BATHTUB

ACCESSORIES

FLUSH PLATES



B1
66002#149
66600#273



B2
66002#149



B3
66002#149
66600#720



B4
66002#149
66602#286

C

720

NICKEL PVD

BASIN

SHOWER

BATHTUB

ACCESSORIES

FLUSH PLATES



C1
66002#720
66600#273



C2
66002#720
66600#149



C3
66002#720



C4
66002#720
66602#286

GESSI

ACCENT

1

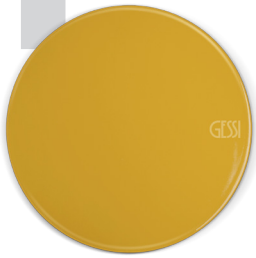

277
OCRA

2



727
BRASS BRUSHED PVD

3



299
MATTE BLACK

4

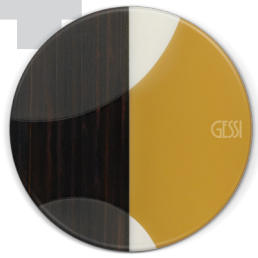

289
ACCENT
ART INSERT

A

277

OCRA



BASIN

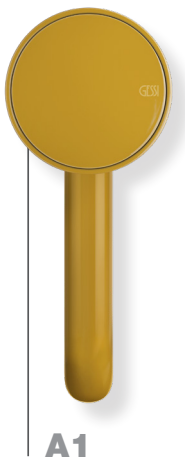

A1
66002#277

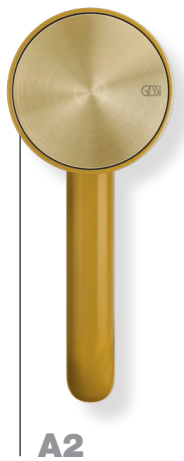

A2
66002#277
66600#727

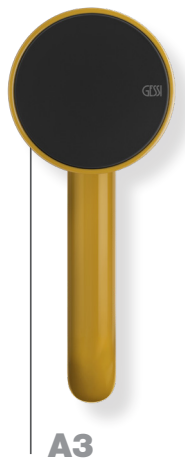

A3
66002#277
66600#299



A4
66002#277
66602#289

B

727

BASIN

SHOWER

BATHTUB

ACCESSORIES

FLUSH PLATES

BRASS BRUSHED PVD



B1
66002#727
66600#277



B2
66002#727



B3
66002#727
66600#299



B4
66002#727
66602#289

C

299

BASIN

SHOWER

BATHTUB

ACCESSORIES

FLUSH PLATES

MATTE BLACK



C1
66002#299
66600#277



C2
66002#299
66600#727



C3
66002#299



C4
66002#299
66602#289

GESSI

MATERIC

1

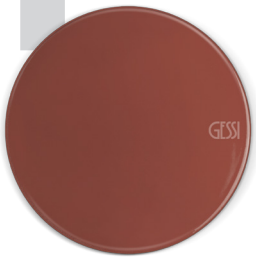

278
CORAL

2



708
COPPER BRUSHED
PVD

3



706
BLACK METAL
PVD

4

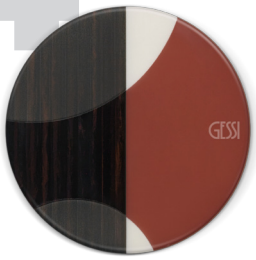

290
MATERIC
ART INSERT

A

278

CORAL



BASIN

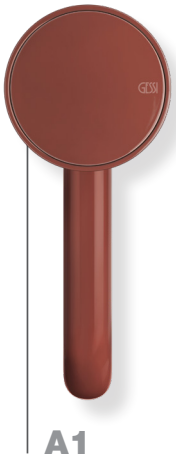

A1
66002#278



A2
66002#278
66600#708

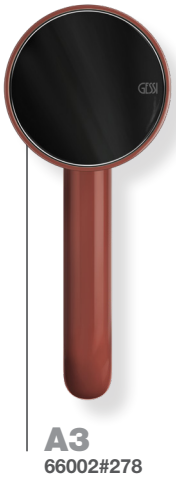

A3
66002#278
66600#706

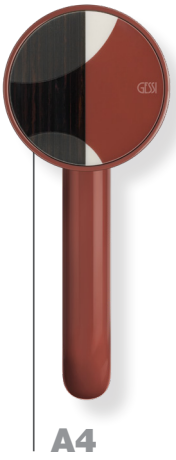

A4
66002#278
66602#290

B

708

COPPER BRUSHED PVD

BASIN

SHOWER

BATHTUB

ACCESSORIES

FLUSH PLATES



B1
66002#708
66600#278



B2
66002#708



B3
66002#708
66600#706



B4
66002#708
66602#290

C

706

BLACK METAL PVD

BASIN

SHOWER

BATHTUB

ACCESSORIES

FLUSH PLATES



C1
66002#706
66600#278



C2
66002#706
66600#708



C3
66002#706



C4
66002#706
66602#290

GESSI

NATURE

1
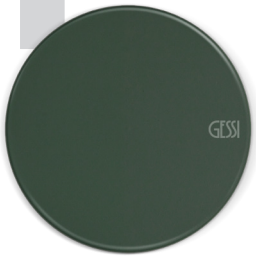
276
AGAVE

2

707
BLACK METAL
BRUSHED PVD

3

031
CHROME

4
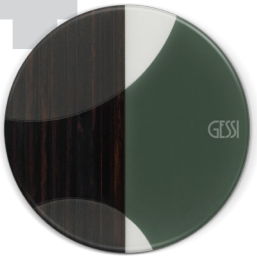
288
NATURE
ART INSERT

A
AGAVE

276


BASIN


A1
66002#276


A2
66002#276
66600#707


A3
66002#276
66600#031


A4
66002#276
66602#288

B
707

BLACK METAL BRUSHED PVD



B1
66002#707
66600#276



B2
66002#707



B3
66002#707
66600#031



B4
66002#707
66602#288

BASIN

SHOWER

BATHTUB

ACCESSORIES

FLUSH PLATES

C
031

CHROME



C1
66002#031
66600#276



C2
66002#031
66600#707



C3
66002#031



C4
66002#031
66602#288

BASIN

SHOWER

BATHTUB

ACCESSORIES

FLUSH PLATES

GESSI


#149
FINOX BRUSHED NICKEL


#707
BLACK METAL BRUSHED PVD


#727
BRASS BRUSHED PVD


#726
WARM BRONZE BRUSHED PVD


#845
DARK BRONZE


#708
COPPER BRUSHED PVD


#720
NICKEL PVD


#706
BLACK METAL PVD


#031
CHROME


#299
MATTE BLACK


BASIN


BASIN


SHOWER

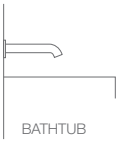
BATHTUB


BIDET


ACCESSORIES


FLUSH PLATES


#275
MATTE CIPRIA


#273
MATTE GREIGE


#276
MATTE AGAVE


#277
GLOSSY OCRA


#278
GLOSSY CORAL


BASIN


BASIN


BIDET



FLUSH PLATES

ONLY IN
MATTE FINISHES:

#280 MATTE OCRA
#281 MATTE CORAL
#275 MATTE CIPRIA
#273 MATTE GREIGE
#278 MATTE AGAVE



WASHBASIN

ONLY IN
MATTE FINISHES:

#521 CRISTALPLANT MATTE WHITE
#511 CRISTALPLANT MATTE BLACK
#507 CRISTALPLANT MATTE CIPRIA
#506 CRISTALPLANT MATTE GREIGE
#509 CRISTALPLANT MATTE OCRA
#510 CRISTALPLANT MATTE CORAL
#508 CRISTALPLANT MATTE AGAVE

66600

Insert

WARM	NEUTRAL	ACCENT	MATERIC	NATURE
		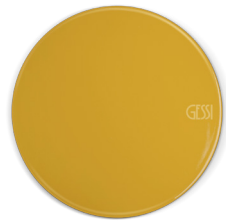		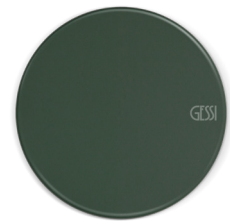
#275 MATTE CIPRIA	**#273** MATTE GREIGE	**#277** GLOSSY OCRA **#280** MATTE OCRA	**#278** GLOSSY CORAL **#281** MATTE CORAL	**#276** MATTE AGAVE
				
#726 WARM BRONZE BRUSHED PVD	**#149** FINOX BRUSHED NICKEL	**#727** BRASS BRUSHED PVD	**#708** COPPER BRUSHED PVD	**#707** BLACK METAL BRUSHED PVD
				
#845 DARK BRONZE	**#720** NICKEL PVD	**#299** MATTE BLACK	**#706** BLACK METAL PVD	**#031** CHROME

66602

ART insert

		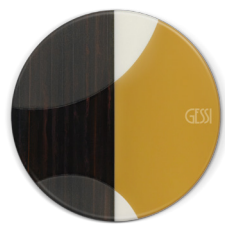		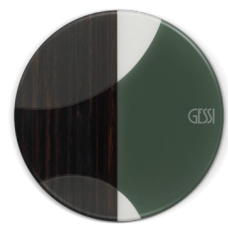
#287 WARM	**#286** NEUTRAL	**#289** ACCENT	**#290** MATERIC	**#288** NATURE

ORIGINI

66600

Insert



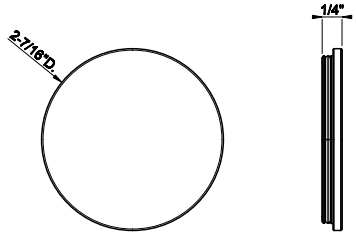

031	Chrome	126	299	Matte Black	171
275	Matte Cipria	171	720	Nickel PVD	186
273	Matte Greige	171	706	Black Metal PVD	186
277	Glossy Ocra	198	707	Black Metal Br. PVD	198
280	Matte Ocra	171	708	Copper Br. PVD	198
278	Glossy Coral	198	726	Warm Bronze Br. PVD	198
281	Matte Coral	171	727	Brass Br. PVD	198
276	Matte Agave	171	845	Dark Bronze	198
149	Finox Br. Nickel	171			

66602

Insert ART

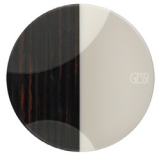

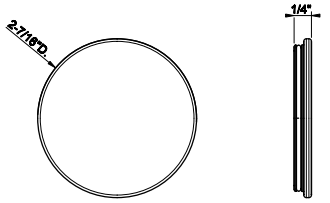

290	Materic	226	287	Warm	226
289	Accent	226	286	Neutral	226
288	Nature	226			

66604

Kit 5 Insert



031	Chrome	539	299	Matte Black	728
275	Matte Cipria	728	720	Nickel PVD	799
273	Matte Greige	728	706	Black Metal PVD	799
277	Glossy Ocra	728	707	Black Metal Br. PVD	850
280	Matte Ocra	728	708	Copper Br. PVD	850
278	Glossy Coral	728	726	Warm Bronze Br. PVD	850
281	Matte Coral	728	727	Brass Br. PVD	850
276	Matte Agave	728	845	Dark Bronze	799
149	Finox Br. Nickel	728			

66605

Kit 5 Insert ART



290	Materic	876	287	Warm	876
289	Accent	876	286	Neutral	876
288	Nature	876			

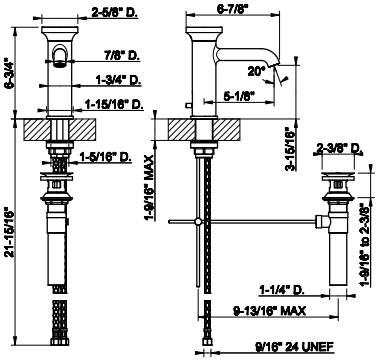

66001

Single lever washbasin mixer with pop-up assembly.
•Can be combined with the insert 66600 and 66602 of the desired finish.
- Spout projection 5-3/16”
- Height 6-3/4”
- 1-1/4” D. pop-up drain
- Flexible hoses with 9/16” – 24 UNEF connections.
- Max flow rate1.2 GPM

031	Chrome	983	720	Nickel PVD	1.455
275	Matte Cipria	1.328	706	Black Metal PVD	1.455
273	Matte Greige	1.328	707	Black Metal Br. PVD	1.553
277	Glossy Ocra	1.553	708	Copper Br. PVD	1.553
278	Glossy Coral	1.553	726	Warm Bronze Br. PVD	1.553
276	Matte Agave	1.328	727	Brass Br. PVD	1.553
149	Finox Br. Nickel	1.328	845	Dark Bronze	1.553
299	Matte Black	1.328			



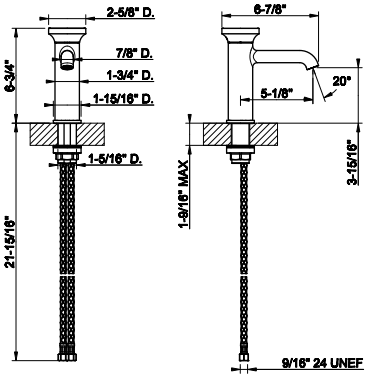

66002

Single lever washbasin mixer without pop-up assembly.
•Can be combined with the insert 66600 and 66602 of the desired finish.
•Spout projection 5-3/16”
- Height 6-3/4”
- Drain not included – see DRAINS section
- Max flow rate 1.2 GPM
- Flexible hoses with 9/16” – 24 UNEF connections.

031	Chrome	895	720	Nickel PVD	1.325
275	Matte Cipria	1.210	706	Black Metal PVD	1.325
273	Matte Greige	1.210	707	Black Metal Br. PVD	1.415
277	Glossy Ocra	1.415	708	Copper Br. PVD	1.415
278	Glossy Coral	1.415	726	Warm Bronze Br. PVD	1.415
276	Matte Agave	1.210	727	Brass Br. PVD	1.415
149	Finox Br. Nickel	1.210	845	Dark Bronze	1.415
299	Matte Black	1.210			



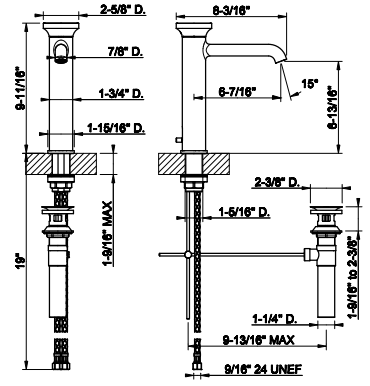

66005

Medium single lever washbasin mixer with pop-up assembly.
•Can be combined with the insert 66600 and 66602 of the desired finish.
- Spout projection 6-7/16”
- Height 9-3/4”
- 1-1/4” pop up drain and flexible hoses with 3/8” connections
- Max flow rate 1.2 GPM

031	Chrome	1.159	720	Nickel PVD	1.715
275	Matte Cipria	1.566	706	Black Metal PVD	1.715
273	Matte Greige	1.566	707	Black Metal Br. PVD	1.830
277	Glossy Ocra	1.830	708	Copper Br. PVD	1.830
278	Glossy Coral	1.830	726	Warm Bronze Br. PVD	1.830
276	Matte Agave	1.566	727	Brass Br. PVD	1.830
149	Finox Br. Nickel	1.566	845	Dark Bronze	1.830
299	Matte Black	1.566			



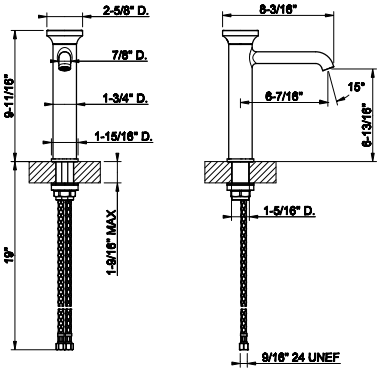

66006

Medium single lever washbasin mixer without pop-up assembly.
•Can be combined with the insert 66600 and 66602 of the desired finish.
- Spout projection 6-7/16”
- Height 9-3/4”
- Drain not included – see DRAINS section
- Flexible hoses with 9/16” – 24 UNEF connections.
- Max flow rate 1.2 GPM

031	Chrome	1.070	720	Nickel PVD	1.585
275	Matte Cipria	1.445	706	Black Metal PVD	1.585
273	Matte Greige	1.445	707	Black Metal Br. PVD	1.693
277	Glossy Ocra	1.693	708	Copper Br. PVD	1.693
278	Glossy Coral	1.693	726	Warm Bronze Br. PVD	1.693
276	Matte Agave	1.445	727	Brass Br. PVD	1.693
149	Finox Br. Nickel	1.445	845	Dark Bronze	1.693
299	Matte Black	1.445			





66003

Tall single lever washbasin mixer with pop-up assembly.
•Can be combined with the insert 66600 and 66602 of the desired finish.
• Extended spout projection 6-7/16”
• Height 12-1/2”
• 1-1/4” D. pop-up drain and flexible hoses with 9/16” – 24UNEF connections
•Max flow rate 1.2 GPM

031	Chrome	1.255	720	Nickel PVD	1.858
275	Matte Cipria	1.696	706	Black Metal PVD	1.858
273	Matte Greige	1.696	707	Black Metal Br. PVD	1.985
277	Glossy Ocra	1.985	708	Copper Br. PVD	1.985
278	Glossy Coral	1.985	726	Warm Bronze Br. PVD	1.985
276	Matte Agave	1.696	727	Brass Br. PVD	1.985
149	Finox Br. Nickel	1.696	845	Dark Bronze	1.985
299	Matte Black	1.696			

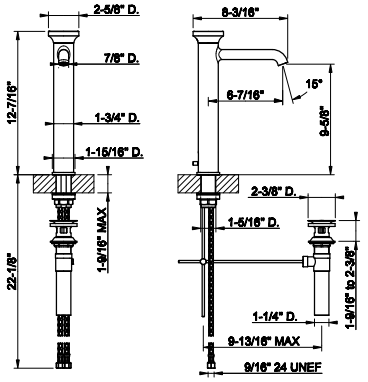



66004

Tall single lever washbasin mixer without pop-up assembly.
• Can be combined with the insert 66600 and 66602 of the desired finish.
• Spout projection 6-7/16”
• Height 12-1/2”
• Drain not included - See DRAINS section
• Max flow rate 1.2 GPM
• Flexible hoses with 9/16” – 24 UNEF connections.

031	Chrome	1.168	720	Nickel PVD	1.730
275	Matte Cipria	1.578	706	Black Metal PVD	1.730
273	Matte Greige	1.578	707	Black Metal Br. PVD	1.845
277	Glossy Ocra	1.845	708	Copper Br. PVD	1.845
278	Glossy Coral	1.845	726	Warm Bronze Br. PVD	1.845
276	Matte Agave	1.578	727	Brass Br. PVD	1.845
149	Finox Br. Nickel	1.578	845	Dark Bronze	1.845
299	Matte Black	1.578			

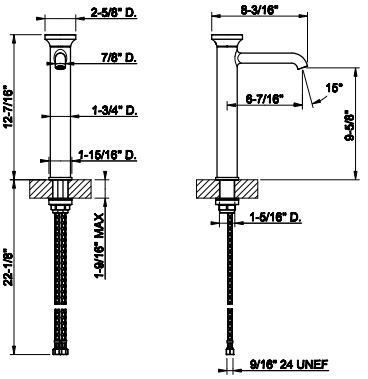



66013

Widespread washbasin mixer with pop-up assembly
• Can be combined with the insert 66600 and 66602 of the desired finish.
• Spoutprojection 7-5/16”
• Height 9-9/16”
• 1-1/4” D. pop-up drain and flexible hoses with 9/16” – 24UNEF connections
• Max flow rate 1.2GPM

031	Chrome	1.688	720	Nickel PVD	2.497
275	Matte Cipria	2.280	706	Black Metal PVD	2.497
273	Matte Greige	2.280	707	Black Metal Br. PVD	2.667
277	Glossy Ocra	2.667	708	Copper Br. PVD	2.667
278	Glossy Coral	2.667	726	Warm Bronze Br. PVD	2.667
276	Matte Agave	2.280	727	Brass Br. PVD	2.667
149	Finox Br. Nickel	2.280	845	Dark Bronze	2.667
299	Matte Black	2.280			

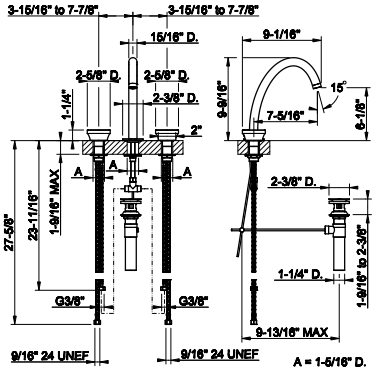



66014

Widespread washbasin mixer without pop-up assembly
• Can be combined with the insert 66600 and 66602 of the desired finish.
• Spout projection 7-5/16”
• Height 9-9/16”
• Drain not included - See DRAINS section
• Max flow rate 1.2 GPM
• Flexible hoses with 9/16”– 24 UNEF connections.

031	Chrome	1.613	720	Nickel PVD	2.388
275	Matte Cipria	2.177	706	Black Metal PVD	2.388
273	Matte Greige	2.177	707	Black Metal Br. PVD	2.550
277	Glossy Ocra	2.550	708	Copper Br. PVD	2.550
278	Glossy Coral	2.550	726	Warm Bronze Br. PVD	2.550
276	Matte Agave	2.177	727	Brass Br. PVD	2.550
149	Finox Br. Nickel	2.177	845	Dark Bronze	2.550
299	Matte Black	2.177			

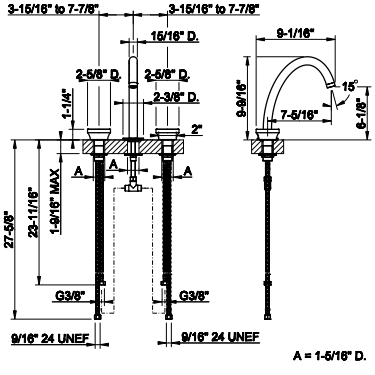

54197+66088

54197

Wall-mounted washbasin mixer rough valve
• Drain not included - See DRAINS section

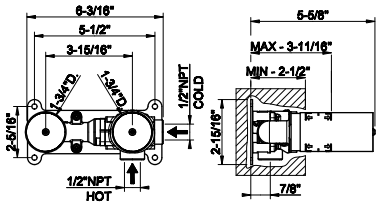



239	Steel Br.	809			

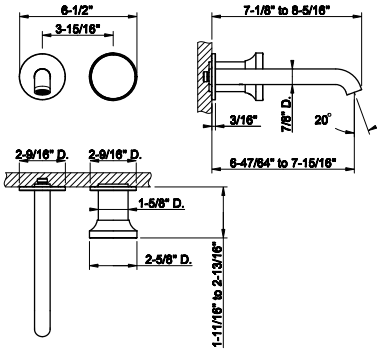

66088

TRIM PARTS ONLY Wall-mounted washbasin mixer trim
• Spout projection 6-47/64" - "7-15/16
• Drain not included - See DRAINS section
• Requires in-wall rough valve 54197
• Max flow rate 1.2 GPM
• ADA compliant. Can be combined with the insert 66600 and 66602 ofthe desired finish.



031	Chrome	884	720	Nickel PVD	1.308
275	Matte Cipria	1.193	706	Black Metal PVD	1.308
273	Matte Greige	1.193	707	Black Metal Br. PVD	1.395
277	Glossy Ocra	1.395	708	Copper Br. PVD	1.395
278	Glossy Coral	1.395	726	Warm Bronze Br. PVD	1.395
276	Matte Agave	1.193	727	Brass Br. PVD	1.395
149	Finox Br. Nickel	1.193	845	Dark Bronze	1.395
299	Matte Black	1.193			

66236+66090

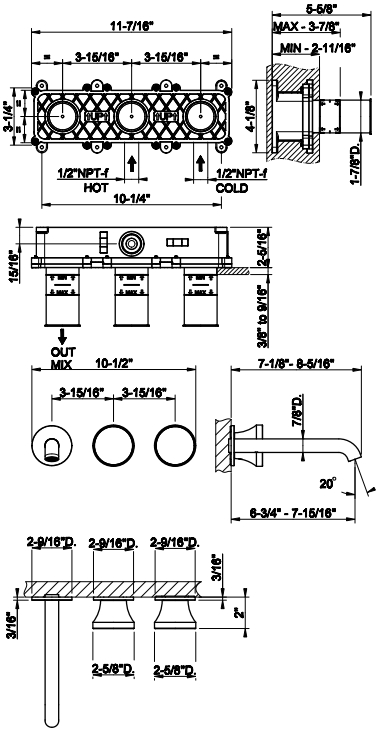

66236

Wall-mounted washbasin mixer rough valve
• Drain not included - See DRAINS section

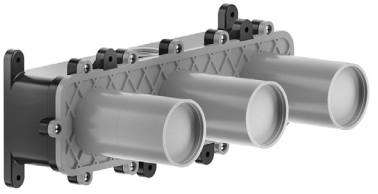

031	Chrome	841			

66090

TRIM PARTS ONLY Wall-mounted wahbasin mixer trim, without waste
• Spout projection 6-3/4" - 7-15/16"
• Drain not included - See DRAINS section
• Requires in-wall rough valve 66236
• Max flow rate 1.2 GPM. Can be combined with the insert 66600 and 66602 of the desired finish.



031	Chrome	1.270	720	Nickel PVD	1.880
275	Matte Cipria	1.715	706	Black Metal PVD	1.880
273	Matte Greige	1.715	707	Black Metal Br. PVD	2.007
277	Glossy Ocra	2.007	708	Copper Br. PVD	2.007
278	Glossy Coral	2.007	726	Warm Bronze Br. PVD	2.007
276	Matte Agave	1.715	727	Brass Br. PVD	2.007
149	Finox Br. Nickel	1.715	845	Dark Bronze	2.007
299	Matte Black	1.715			

66021



Deck-mounted medium washbasin spout only without pop-up assembly
- Spout projection 7-5/16”
- Height 9-9/16”
- 1/2” connections
- Drain not included - See DRAINS section
- Requires handle kit
- Max flow rate 1.2 GPM
- Flexible hoses with 9/16” – 24 UNEF connections.

031	Chrome	720	720	Nickel PVD	1.068
275	Matte Cipria	973	706	Black Metal PVD	1.068
273	Matte Greige	973	707	Black Metal Br. PVD	1.140
277	Glossy Ocra	1.140	708	Copper Br. PVD	1.140
278	Glossy Coral	1.140	726	Warm Bronze Br. PVD	1.140
276	Matte Agave	973	727	Brass Br. PVD	1.140
149	Finox Br. Nickel	973	845	Dark Bronze	1.140
299	Matte Black	973			

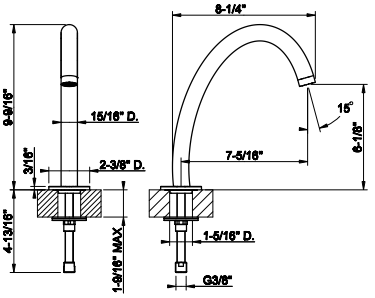

66025



Deck-mounted tall washbasin spout only without pop-up assembly
- Spout projection 9-1/16”
- Height 14-1/4”
- 1/2” connections
- Drain not included - See DRAINS section
- Requires handle kit
- Max flow rate 1.2 GPM
- Flexible hoses with 9/16” – 24 UNEF connections.

031	Chrome	858	720	Nickel PVD	1.270
275	Matte Cipria	1.161	706	Black Metal PVD	1.270
273	Matte Greige	1.161	707	Black Metal Br. PVD	1.355
277	Glossy Ocra	1.355	708	Copper Br. PVD	1.355
278	Glossy Coral	1.355	726	Warm Bronze Br. PVD	1.355
276	Matte Agave	1.161	727	Brass Br. PVD	1.355
149	Finox Br. Nickel	1.161	845	Dark Bronze	1.355
299	Matte Black	1.161			

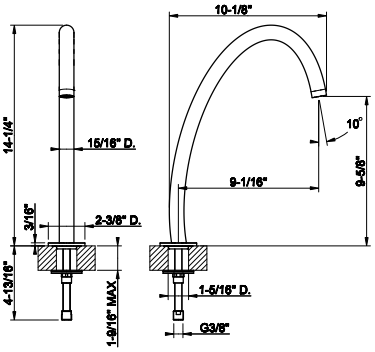

66102

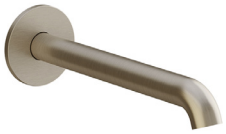

Wall-mounted washbasin spout only
- Projection 8-1/16”
- 1/2” connections
- Drain not included - See DRAINS section
- Requires mixercontrol
- Max flow rate 1.2 GPM.

031	Chrome	401	720	Nickel PVD	593
275	Matte Cipria	541	706	Black Metal PVD	593
273	Matte Greige	541	707	Black Metal Br. PVD	633
277	Glossy Ocra	633	708	Copper Br. PVD	633
278	Glossy Coral	633	726	Warm Bronze Br. PVD	633
276	Matte Agave	541	727	Brass Br. PVD	633
149	Finox Br. Nickel	541	845	Dark Bronze	633
299	Matte Black	541			

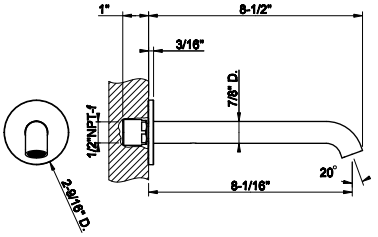

66104

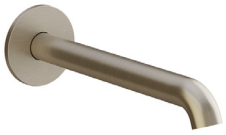

Wall-mounted washbasin spout only
- Custom length MIN3-9/16” - MAX11-13/16”
- 1/2” connections
- Drain not included - See DRAINS section
- Requires mixercontrol
- Max flow rate 1.2 GPM.

031	Chrome	801	720	Nickel PVD	1.185
275	Matte Cipria	1.080	706	Black Metal PVD	1.185
273	Matte Greige	1.080	707	Black Metal Br. PVD	1.265
277	Glossy Ocra	1.265	708	Copper Br. PVD	1.265
278	Glossy Coral	1.265	726	Warm Bronze Br. PVD	1.265
276	Matte Agave	1.080	727	Brass Br. PVD	1.265
149	Finox Br. Nickel	1.080	845	Dark Bronze	1.265
299	Matte Black	1.080			

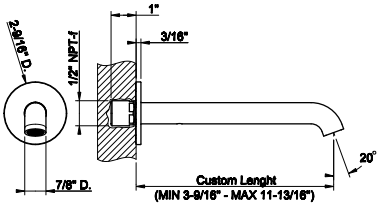

ORIGINI

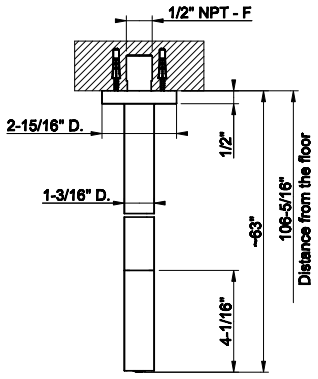

63399

Ceiling-mounted washbasin spout only
- Spout length 63”
- Drain not included - See DRAINS section
- Requires mixer control
- Maxflow rate 1.2 gpm



031	Chrome	1.777	030	Copper PVD	2.631
275	Matte Cipria	2.279	708	Copper Br. PVD	2.806
273	Matte Greige	2.279	735	Warm Bronze PVD	2.631
277	Glossy Ocra	2.666	726	Warm Bronze Br. PVD	2.806
278	Glossy Coral	2.666	710	Brass PVD	2.631
276	Matte Agave	2.279	727	Brass Br. PVD	2.806
149	Finox Br. Nickel	2.399	246	Gold PVD	2.986
299	Matte Black	2.399	716	Gold Br. PVD	2.986
720	Nickel PVD	2.631	845	Dark Bronze	2.666
706	Black Metal PVD	2.631	187	Aged Bronze	2.806
707	Black Metal Br. PVD	2.806	713	Antique Brass	2.806

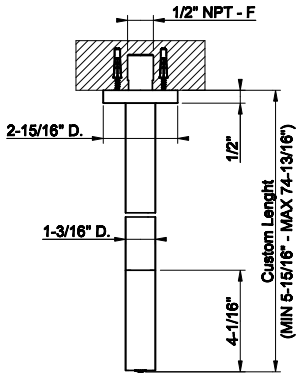

63499

Ceiling-mounted washbasin spout only
- Custom length: Minimum 5-15/16” - Maximum 74-13/16”
- Drain not included - See DRAINS section
- Requires mixer control
- Max flow rate 1.2 gpm



031	Chrome	2.548	030	Copper PVD	3.769
275	Matte Cipria	3.439	708	Copper Br. PVD	4.022
273	Matte Greige	3.439	735	Warm Bronze PVD	3.769
277	Glossy Ocra	3.439	726	Warm Bronze Br. PVD	4.022
278	Glossy Coral	3.439	710	Brass PVD	3.769
276	Matte Agave	3.439	727	Brass Br. PVD	4.022
149	Finox Br. Nickel	3.439	246	Gold PVD	4.281
299	Matte Black	3.439	716	Gold Br. PVD	4.281
720	Nickel PVD	3.769	845	Dark Bronze	4.022
706	Black Metal PVD	3.769	187	Aged Bronze	4.022
707	Black Metal Br. PVD	4.022	713	Antique Brass	4.022

66100



Deck mounted washbasin mixer control
• 1/2” connections
• Drain not included - See DRAINS section
• ADA compliant. Insert in desired finish included. Can be combinedwith the insert 66600 and 66602 of the desired finish.

031	Chrome	676	720	Nickel PVD	1.001
275	Matte Cipria	914	706	Black Metal PVD	1.001
273	Matte Greige	914	707	Black Metal Br. PVD	1.068
277	Glossy Ocra	1.068	708	Copper Br. PVD	1.068
278	Glossy Coral	1.068	726	Warm Bronze Br. PVD	1.068
276	Matte Agave	914	727	Brass Br. PVD	1.068
149	Finox Br. Nickel	914	845	Dark Bronze	1.068
299	Matte Black	914			

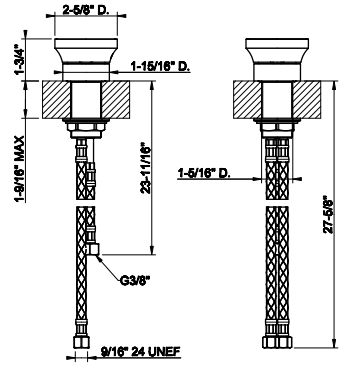

54055

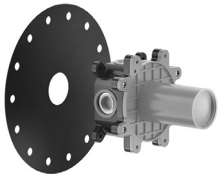

Wall-mounted Basin/bath mixer rough valve. One exit

239	Steel Br.	563			

54055+66109

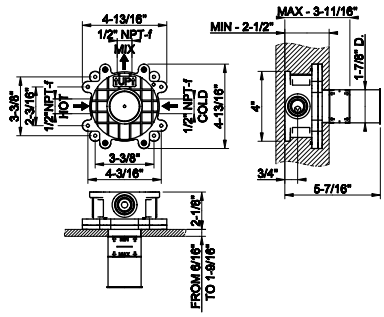

66109



TRIM PARTS ONLY Wall-mounted washbasin mixer control
• 1/2” connections
• Drain not included - See DRAINS section
•Requires in-wallrough valve 54055
• Handle kit. Can be combined with the insert 66600 and 66602 of the desired finish.

031	Chrome	483	720	Nickel PVD	716
275	Matte Cipria	654	706	Black Metal PVD	716
273	Matte Greige	654	707	Black Metal Br. PVD	763
277	Glossy Ocra	763	708	Copper Br. PVD	763
278	Glossy Coral	763	726	Warm Bronze Br. PVD	763
276	Matte Agave	654	727	Brass Br. PVD	763
149	Finox Br. Nickel	654	845	Dark Bronze	763
299	Matte Black	654			

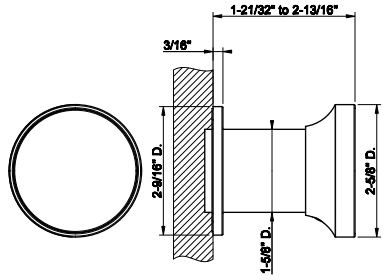

66037



Four-hole roman tub set.
• Spout projection 7-5/16”
•Diverter
• Hand shower
• 59” flex hose
• Hand shower max flow rate 1.75 GPM
• Spout mixed flow rate 9 GPM at 60 PSI. Can be combined with the insert 66600 and 66602 of the desired finish.

031	Chrome	3.064	707	Black Metal Br. PVD	4.843
149	Finox Br. Nickel	4.139	708	Copper Br. PVD	4.843
299	Matte Black	4.139	726	Warm Bronze Br. PVD	4.843
720	Nickel PVD	4.536	727	Brass Br. PVD	4.843
706	Black Metal PVD	4.536	845	Dark Bronze	4.843

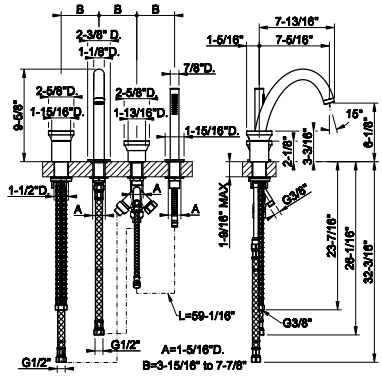

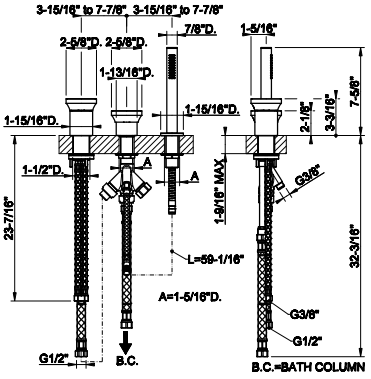

66043

Three-hole roman tub set
- Mixer
- Diverter
- Hand shower
- 59” flex hose
- Hand shower max flow rate 1.75 GPM. Can be combined with the insert 66600 and 66602 of the desired finish.



031	Chrome	2.315	707	Black Metal Br. PVD	3.660
149	Finox Br. Nickel	3.127	708	Copper Br. PVD	3.660
299	Matte Black	3.127	726	Warm Bronze Br. PVD	3.660
720	Nickel PVD	3.426	727	Brass Br. PVD	3.660
706	Black Metal PVD	3.426	845	Dark Bronze	3.660

48189+66028

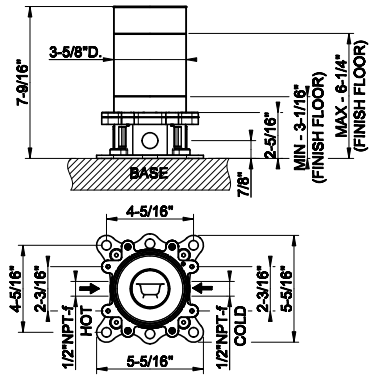

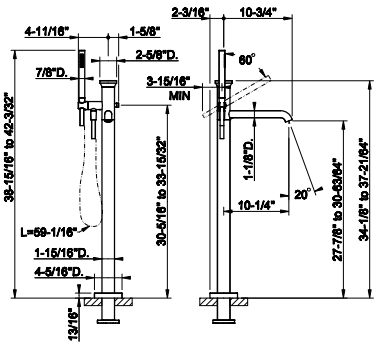

48189

Floor-mounted tub filler in-floor rough valve



031	Chrome	847

66028

TRIM PARTS ONLY Floor-mounted tub filler
- Handshower
- 59” Cromalux flex hose
- Diverter
- Spout projection 10-1/4”
- Requires in-floor roughvalve 48189
- Handshower max flow rate 1.75 GPM
- Spout mixed flow rate 6 GPM at 60 PSI. Can be combined with theinsert 66600 and 66602 of the desired finish.



031	Chrome	4.124	707	Black Metal Br. PVD	6.515
149	Finox Br. Nickel	5.569	708	Copper Br. PVD	6.515
299	Matte Black	5.569	726	Warm Bronze Br. PVD	6.515
720	Nickel PVD	6.104	727	Brass Br. PVD	6.515
706	Black Metal PVD	6.104	845	Dark Bronze	6.515

66103



Wall mounted Bath spout only
- 1/2’ connections with separate control (not included)
- Spout projection 7-9/16”
- Drain not included -See DRAINS section
- Requires mixer control
- Flow rate 6.4 GPM at 60 PSI

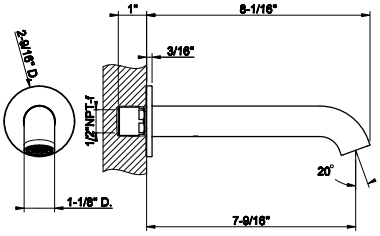

031	Chrome	518	707	Black Metal Br. PVD	820
149	Finox Br. Nickel	701	708	Copper Br. PVD	820
299	Matte Black	701	726	Warm Bronze Br. PVD	820
720	Nickel PVD	769	727	Brass Br. PVD	820
706	Black Metal PVD	769	845	Dark Bronze	820

54139

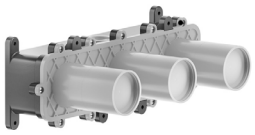

Wall-mounted bath mixer control rough valve
- 1/2” connections
- Non positive shut off

54139+66036

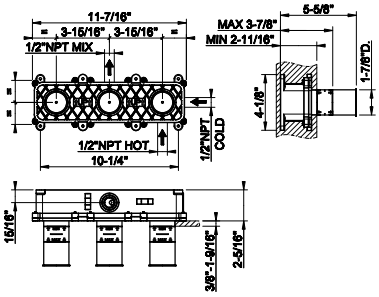

239	Steel Br.	1.087			



66036

TRIM PARTS ONLY. Wall-mounted bath mixer control
- Single backplate
- Two-way diverter
- Water outlet
- Handshower max flow rate1.75 GPM
- Requires inline pressure balance. Can be combined with the insert 66600 and 66602 of the desired finish.

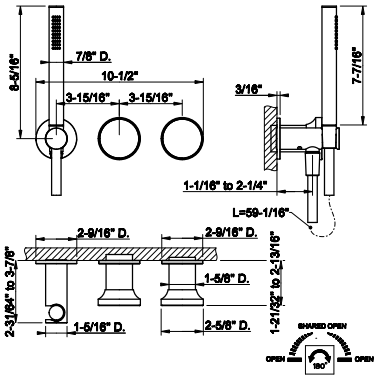

031	Chrome	1.645	707	Black Metal Br. PVD	2.599
149	Finox Br. Nickel	2.222	708	Copper Br. PVD	2.599
299	Matte Black	2.222	726	Warm Bronze Br. PVD	2.599
720	Nickel PVD	2.435	727	Brass Br. PVD	2.599
706	Black Metal PVD	2.435	845	Dark Bronze	2.599

63011+66222

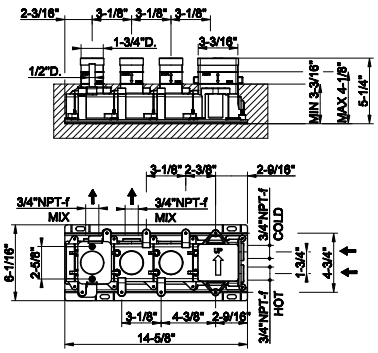

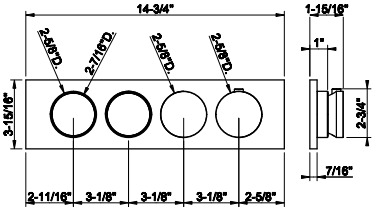

63011

In-wall thermostatic rough valve for two separate functions.
- High capacity
- 3/4”connections
- Anti-scalding

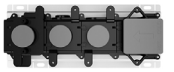

031	Chrome	1.654

66222

TRIM PARTS ONLY External parts for thermostatic mixer for two functions, with push-button on/off control
- Single backplate
- 1/2”connections
- Anti-scalding
- Requires in-wall rough valve 63011
- Can be combined with the insert 66600 and 66602 of the desired finish.



031	Chrome	3.030	707	Black Metal Br. PVD	4.786
149	Finox Br. Nickel	4.091	708	Copper Br. PVD	4.786
299	Matte Black	4.091	726	Warm Bronze Br. PVD	4.786
720	Nickel PVD	4.484	727	Brass Br. PVD	4.786
706	Black Metal PVD	4.484	845	Dark Bronze	4.786

63013+66224

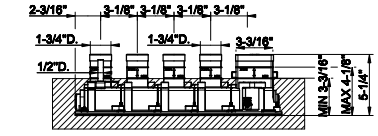

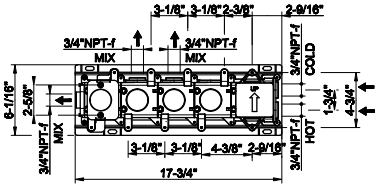

63013

In-wall thermostatic rough valve for three simultaneous functions.
- High capacity
- 3/4”connections
- Anti-scalding

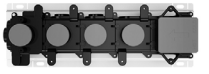

031	Chrome	1.820

66224

TRIM PARTS ONLY External parts for thermostatic mixer for three functions, with push-button on/off control
- Single backplate
- 1/2”connections
- Anti-scalding
- Requires in-wall rough valve 63013
- Can be combined with the insert 66600 and 66602 of the desired finish.



031	Chrome	3.567	707	Black Metal Br. PVD	5.635
149	Finox Br. Nickel	4.817	708	Copper Br. PVD	5.635
299	Matte Black	4.817	726	Warm Bronze Br. PVD	5.635
720	Nickel PVD	5.279	727	Brass Br. PVD	5.635
706	Black Metal PVD	5.279	845	Dark Bronze	5.635

63015

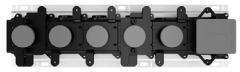

In-wall thermostatic rough valve for four simultaneous functions.
- High capacity
- 3/4”connections
- Anti-scalding

031	Chrome	2.282

63015+66226

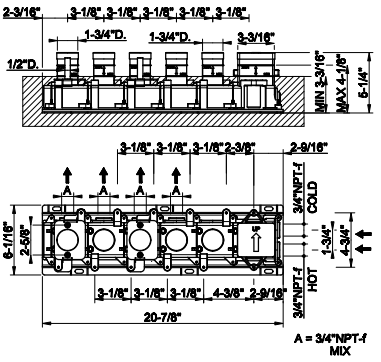

66226



TRIM PARTS ONLY External parts for thermostatic mixer for four functions, with push-button on/off control
- Single backplate
- 1/2”connections
- Anti-scalding
- Requires in-wall rough valve 63015
- Can be combined with the insert 66600 and 66602 of the desired finish.

031	Chrome	4.178	707	Black Metal Br. PVD	6.603
149	Finox Br. Nickel	5.644	708	Copper Br. PVD	6.603
299	Matte Black	5.644	726	Warm Bronze Br. PVD	6.603
720	Nickel PVD	6.185	727	Brass Br. PVD	6.603
706	Black Metal PVD	6.185	845	Dark Bronze	6.603

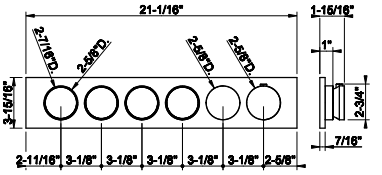

09279

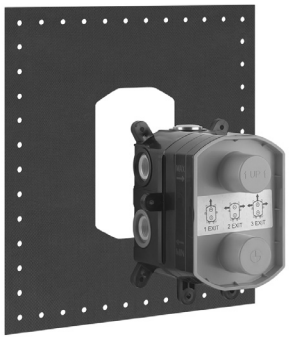

In-wall thermostatic rough valve for 1/2/3-way diverter function
- 1/2” connections
- Vertical application
- Anti-scalding
- Non-Shared function

031	Chrome	877

09279+66133

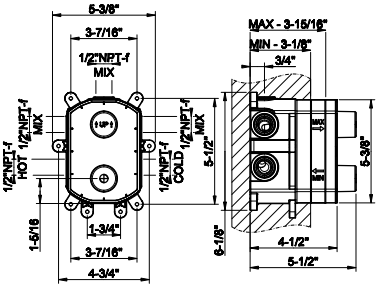

66133



TRIM PARTS ONLY External parts for thermostatic with single volume control
- Single backplate
- 1/2” connections
- Vertical application
- Anti-scalding
- Requires in-wall rough valve 09279

031	Chrome	1.484	707	Black Metal Br. PVD	2.345
149	Finox Br. Nickel	2.004	708	Copper Br. PVD	2.345
299	Matte Black	2.004	726	Warm Bronze Br. PVD	2.345
720	Nickel PVD	2.197	727	Brass Br. PVD	2.345
706	Black Metal PVD	2.197	845	Dark Bronze	2.345

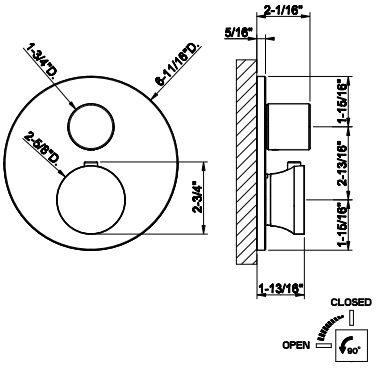

09279+66135

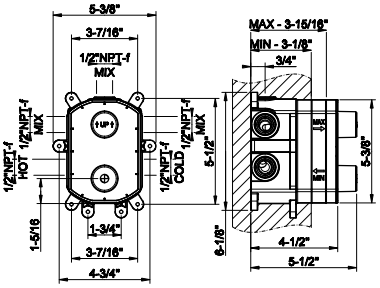

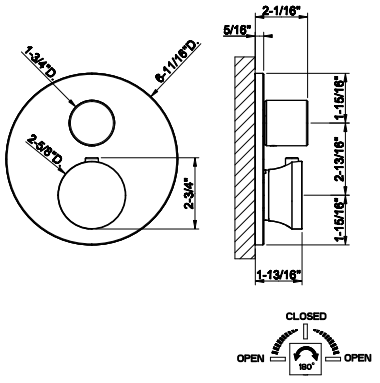

09279

In-wall thermostatic rough valve for 1/2/3-way diverter function
- 1/2" connections
- Vertical application
- Anti-scalding
- Non-Shared function

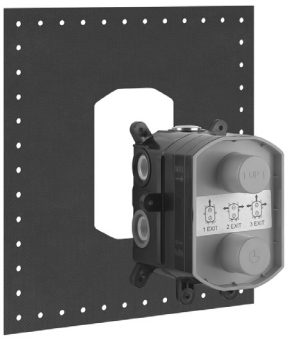

031	Chrome	877

66135

TRIM PARTS ONLY External parts for 2-way diverter thermostatic and volume control
- Single backplate
- 1/2" connections
- Verticalapplication
- Anti-scalding
- Requires in-wall rough valve 09279



031	Chrome	1.484	707	Black Metal Br. PVD	2.345
149	Finox Br. Nickel	2.004	708	Copper Br. PVD	2.345
299	Matte Black	2.004	726	Warm Bronze Br. PVD	2.345
720	Nickel PVD	2.197	727	Brass Br. PVD	2.345
706	Black Metal PVD	2.197	845	Dark Bronze	2.345

09279+66137

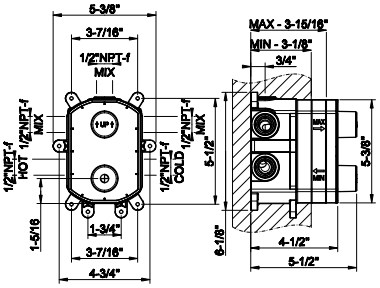

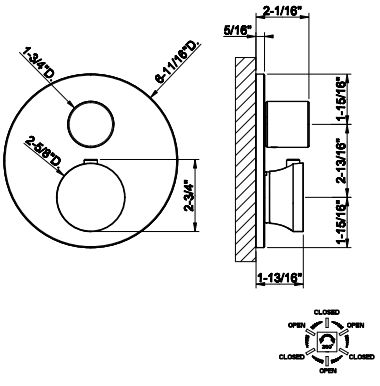

09279

In-wall thermostatic rough valve for 1/2/3-way diverter function
- 1/2" connections
- Vertical application
- Anti-scalding
- Non-Shared function

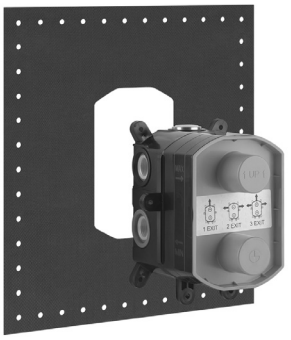

031	Chrome	877

66137

TRIM PARTS ONLY External parts for 3-way diverter thermostatic and volume control
- Single backplate
- 1/2" connections
- Verticalapplication
- Anti-scalding
- Requires in-wall rough valve 09279



031	Chrome	1.484	707	Black Metal Br. PVD	2.345
149	Finox Br. Nickel	2.004	708	Copper Br. PVD	2.345
299	Matte Black	2.004	726	Warm Bronze Br. PVD	2.345
720	Nickel PVD	2.197	727	Brass Br. PVD	2.345
706	Black Metal PVD	2.197	845	Dark Bronze	2.345



09272

In-wall single exit pressure balance rough valve
• 1/2” connections

031	Chrome	371

09272+66172

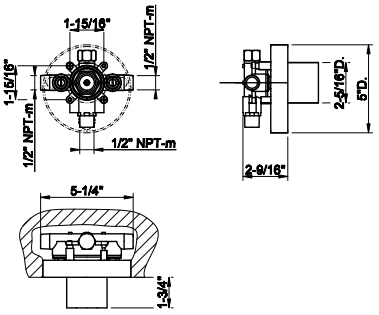



66172

TRIM PARTS ONLY External parts for single exit pressure
• Single backplate
• 1/2” connections
• Requires in-wall rough valve 09272

031	Chrome	1.133	707	Black Metal Br. PVD	1.791
149	Finox Br. Nickel	1.530	708	Copper Br. PVD	1.791
299	Matte Black	1.530	726	Warm Bronze Br. PVD	1.791
720	Nickel PVD	1.677	727	Brass Br. PVD	1.791
706	Black Metal PVD	1.677	845	Dark Bronze	1.791

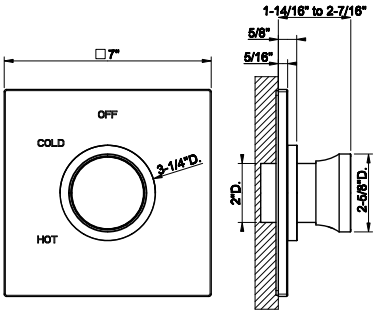



09274

In-wall pressure balance rough valve with 2-way diverter
• 1/2” connections
• Non-Shared Function

031	Chrome	443

09274+66174

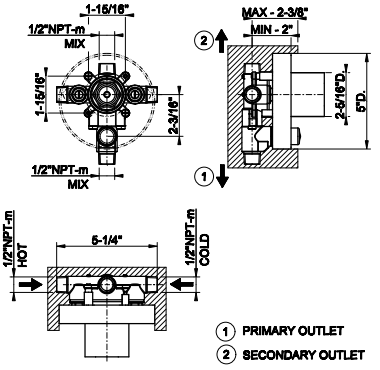



66174

TRIM PARTS ONLY External parts for pressure balance with2-way diverter
• Single backplate
• 1/2” connections
• Requires in-wall rough valve 09274

031	Chrome	1.225	707	Black Metal Br. PVD	1.936
149	Finox Br. Nickel	1.654	708	Copper Br. PVD	1.936
299	Matte Black	1.654	726	Warm Bronze Br. PVD	1.936
720	Nickel PVD	1.814	727	Brass Br. PVD	1.936
706	Black Metal PVD	1.814	845	Dark Bronze	1.936

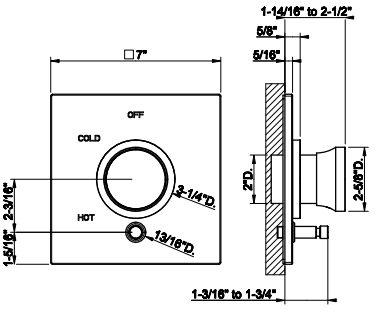

39693+66200

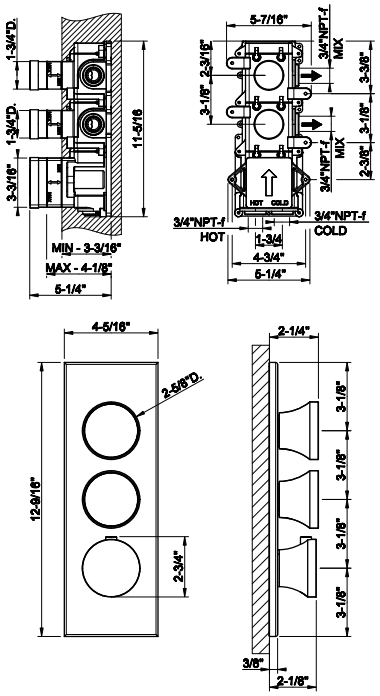

39693

In-wall thermostatic rough valve with 2 volume controls
- High capacity
- 3/4" connections
- Vertical/Horizontal application
- Anti-scalding

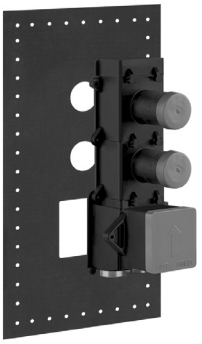

031	Chrome	1.903

66200

TRIM PARTS ONLY External parts for thermostatic with 2 volume controls
- Single backplate
- High capacity
- 3/4" connections
- Vertical/Horizontal application
- Anti-scalding
- Requires in-wall rough valve 39693



031	Chrome	2.303	707	Black Metal Br. PVD	3.639
149	Finox Br. Nickel	3.109	708	Copper Br. PVD	3.639
299	Matte Black	3.109	726	Warm Bronze Br. PVD	3.639
720	Nickel PVD	3.408	727	Brass Br. PVD	3.639
706	Black Metal PVD	3.408	845	Dark Bronze	3.639

39693+66202

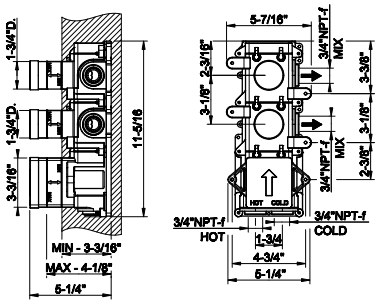

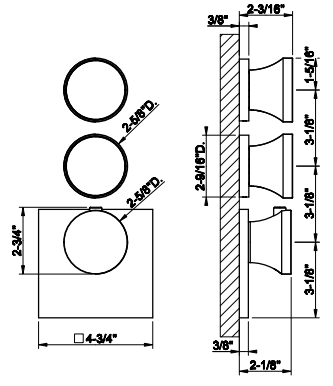

39693

In-wall thermostatic rough valve with 2 volume controls
- High capacity
- 3/4" connections
- Vertical/Horizontal application
- Anti-scalding

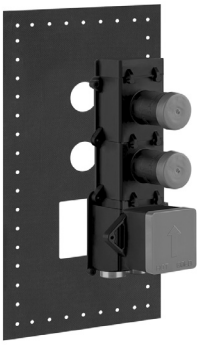

031	Chrome	1.903

66202

TRIM PARTS ONLY External parts for thermostatic with 2 volume controls
- Separate backplates
- High capacity
- 3/4" connections
- Vertical/Horizontal application
- Anti-scalding
- Requires in-wall rough valve 39693



031	Chrome	2.585	707	Black Metal Br. PVD	4.084
149	Finox Br. Nickel	3.490	708	Copper Br. PVD	4.084
299	Matte Black	3.490	726	Warm Bronze Br. PVD	4.084
720	Nickel PVD	3.825	727	Brass Br. PVD	4.084
706	Black Metal PVD	3.825	845	Dark Bronze	4.084

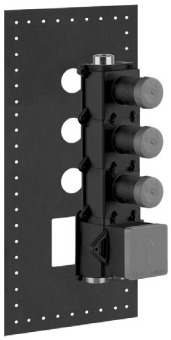

39695

In-wall thermostatic rough valve with 3 volume controls
- High capacity
- 3/4” connections
- Vertical/Horizontal application
- Anti-scalding

031	Chrome	2.197

66204



TRIM PARTS ONLY External parts for thermostatic with 3 volume controls
- Single backplate
- High capacity
- 3/4” connections
- Vertical/Horizontal application
- Anti-scalding
- Requires in-wall rough valve 39695

031	Chrome	2.827	707	Black Metal Br. PVD	4.467
149	Finox Br. Nickel	3.817	708	Copper Br. PVD	4.467
299	Matte Black	3.817	726	Warm Bronze Br. PVD	4.467
720	Nickel PVD	4.184	727	Brass Br. PVD	4.467
706	Black Metal PVD	4.184	845	Dark Bronze	4.467

39695+66204

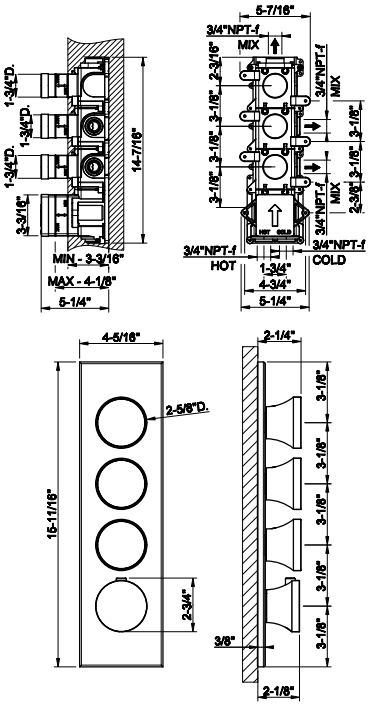

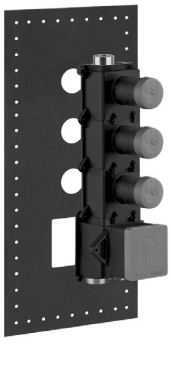

39695

In-wall thermostatic rough valve with 3 volume controls
- High capacity
- 3/4” connections
- Vertical/Horizontal application
- Anti-scalding

031	Chrome	2.197

66206



TRIM PARTS ONLY External parts for thermostatic with 3 volume controls
- Separate backplates
- High capacity
- 3/4” connections
- Vertical/Horizontal application
- Anti-scalding
- Requires in-wall rough valve 39695

031	Chrome	3.170	707	Black Metal Br. PVD	5.009
149	Finox Br. Nickel	4.280	708	Copper Br. PVD	5.009
299	Matte Black	4.280	726	Warm Bronze Br. PVD	5.009
720	Nickel PVD	4.691	727	Brass Br. PVD	5.009
706	Black Metal PVD	4.691	845	Dark Bronze	5.009

39695+66206

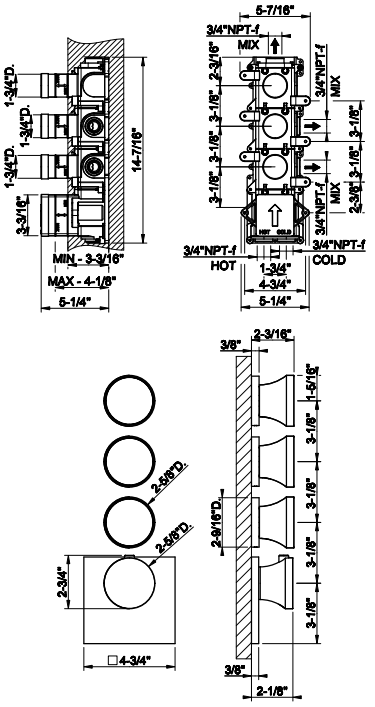

39699+66208

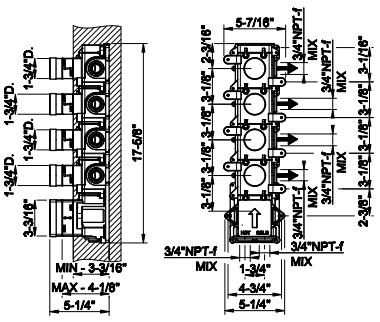

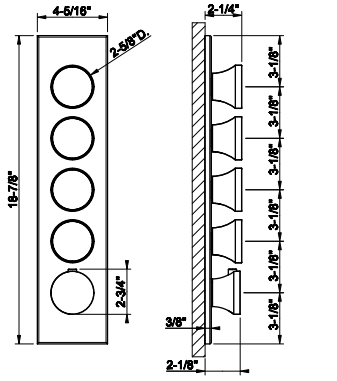

39699

In-wall thermostatic rough valve with 4 volume controls
- High capacity
- 3/4" connections
- Vertical/Horizontal application
- Anti-scalding
- Max flow rate 1.75 GPM

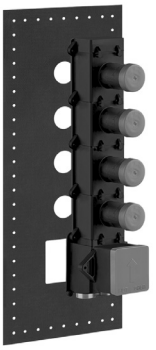

031	Chrome	2.498

66208

TRIM PARTS ONLY External parts for thermostatic with 4 volume controls
- Single backplate
- High capacity
- 3/4" connections
- Vertical/Horizontal application
- Anti-scalding
- Requires in-wall rough valve 39699



031	Chrome	3.375	707	Black Metal Br. PVD	5.332
149	Finox Br. Nickel	4.556	708	Copper Br. PVD	5.332
299	Matte Black	4.556	726	Warm Bronze Br. PVD	5.332
720	Nickel PVD	4.995	727	Brass Br. PVD	5.332
706	Black Metal PVD	4.995	845	Dark Bronze	5.332

39699+66214

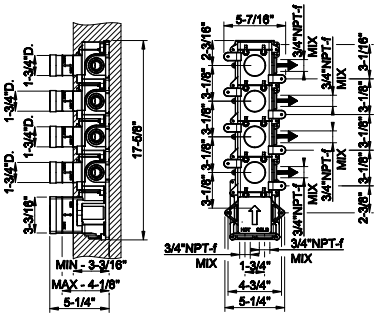

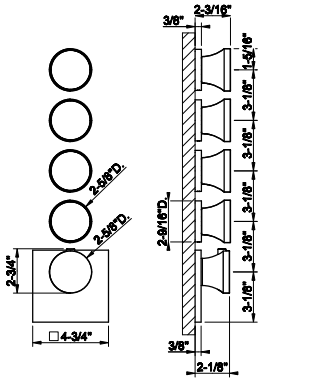

39699

In-wall thermostatic rough valve with 4 volume controls
- High capacity
- 3/4" connections
- Vertical/Horizontal application
- Anti-scalding
- Max flow rate 1.75 GPM

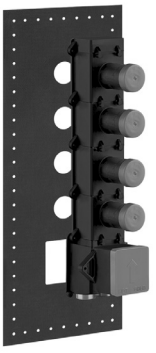

031	Chrome	2.498

66214

TRIM PARTS ONLY External parts for thermostatic with 4 volume controls
- Separate backplates
- High capacity
- 3/4" connections
- Vertical/Horizontal application
- Anti-scalding
- Requires in-wall rough valve 39699



031	Chrome	3.754	707	Black Metal Br. PVD	5.932
149	Finox Br. Nickel	5.069	708	Copper Br. PVD	5.932
299	Matte Black	5.069	726	Warm Bronze Br. PVD	5.932
720	Nickel PVD	5.556	727	Brass Br. PVD	5.932
706	Black Metal PVD	5.556	845	Dark Bronze	5.932

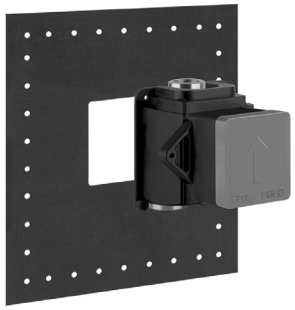

39681

In-wall thermostatic rough valve for individual mixer
- High capacity
- 3/4” connections
- Vertical/Horizontal application
- Anti-scalding

031	Chrome	1.169

39681+66316

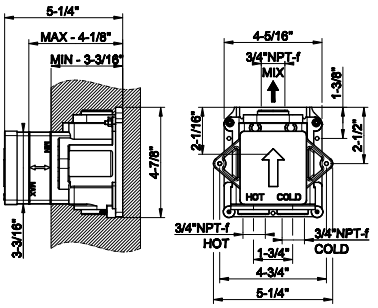



66316

TRIM PARTS ONLY External parts for individual thermostatic mixer
- High Capacity
- 3/4” connections
- Vertical/horizontal application
- Anti-scalding
- Requires in-wall rough valve 39681

031	Chrome	1.148	707	Black Metal Br. PVD	1.814
149	Finox Br. Nickel	1.551	708	Copper Br. PVD	1.814
299	Matte Black	1.551	726	Warm Bronze Br. PVD	1.814
720	Nickel PVD	1.700	727	Brass Br. PVD	1.814
706	Black Metal PVD	1.700	845	Dark Bronze	1.814

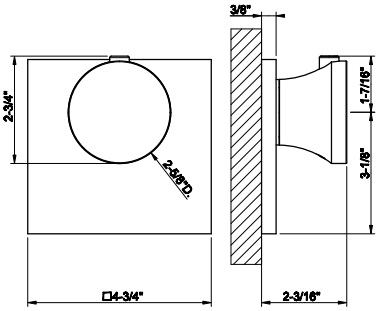

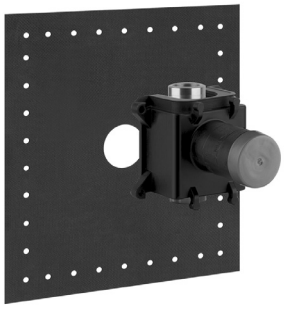

39683

In-wall thermostatic rough valve parts for volume control
- High capacity
- 3/4” connections
- Vertical/Horizontal application
- Anti-scalding

031	Chrome	582

39683+66218

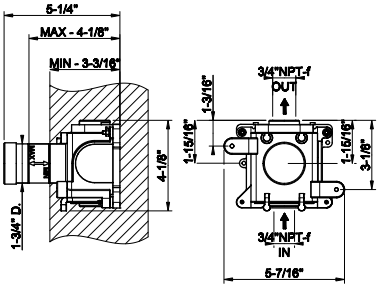



66218

TRIM PARTS ONLY External parts for individual thermostatic volume control
- High capacity
- 3/4” connections
- Vertical/Horizontalapplication
- Anti-scalding
- Requires in-wall rough valve 39683

031	Chrome	719	707	Black Metal Br. PVD	1.137
149	Finox Br. Nickel	971	708	Copper Br. PVD	1.137
299	Matte Black	971	726	Warm Bronze Br. PVD	1.137
720	Nickel PVD	1.064	727	Brass Br. PVD	1.137
706	Black Metal PVD	1.064	845	Dark Bronze	1.137

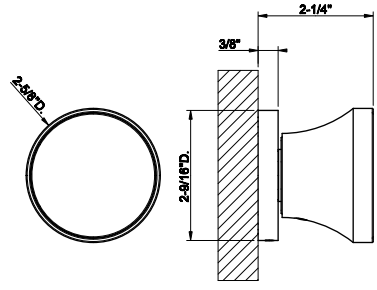

ORIGINI

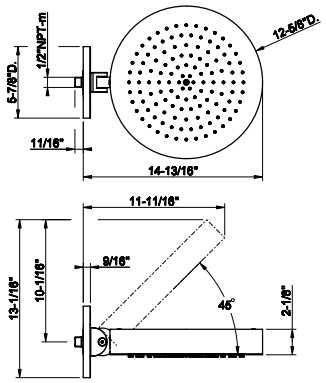

66150

Wall-mounted anti limestone and adjustable head shower
- Max flow rate 1,75 GPM
- 12-5/8" D.
- Length 14-13/16"
- 1/2" connections



031	Chrome	2.874	707	Black Metal Br. PVD	4.542
149	Finox Br. Nickel	3.882	708	Copper Br. PVD	4.542
299	Matte Black	3.882	726	Warm Bronze Br. PVD	4.542
720	Nickel PVD	4.254	727	Brass Br. PVD	4.542
706	Black Metal PVD	4.254	845	Dark Bronze	4.542

66156

Wall-mounted adjustable shower head with arm.
- 1/2" connections.
- Projection from wall to center 9-7/16"
- Total projection 11-1/16"
- Max flow rate 1.75 GPM

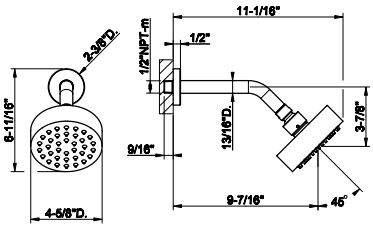



031	Chrome	1.554	707	Black Metal Br. PVD	2.456
149	Finox Br. Nickel	2.098	708	Copper Br. PVD	2.456
299	Matte Black	2.098	726	Warm Bronze Br. PVD	2.456
720	Nickel PVD	2.300	727	Brass Br. PVD	2.456
706	Black Metal PVD	2.300	845	Dark Bronze	2.456

66158

Wall-mounted adjustable multi-function shower head with arm:
- 1/2" connections
- Projection from wall to center 9-5/8"
- Total projection 11-1/8"
- Max flow rate 1.75 gpm

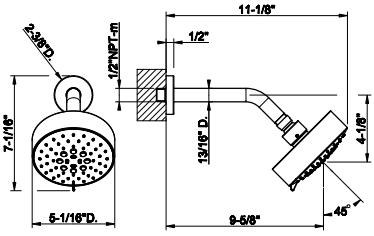



031	Chrome	1.907	707	Black Metal Br. PVD	3.013
149	Finox Br. Nickel	2.575	708	Copper Br. PVD	3.013
299	Matte Black	2.575	726	Warm Bronze Br. PVD	3.013
720	Nickel PVD	2.823	727	Brass Br. PVD	3.013
706	Black Metal PVD	2.823	845	Dark Bronze	3.013

66148

Wall-mounted adjustable shower head with arm.
- 1/2" connections.
- Projection from wall to center 15-1/2"
- Total projection 20-3/8"
- Max flow rate 1.75 GPM

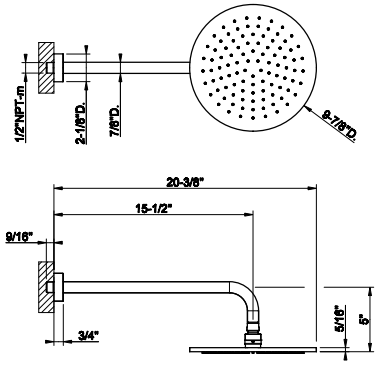



031	Chrome	1.168	708	Copper Br. PVD	1.845
149	Finox Br. Nickel	1.578	735	Warm Bronze PVD	1.730
299	Matte Black	1.578	726	Warm Bronze Br. PVD	1.845
720	Nickel PVD	1.730	710	Brass PVD	1.730
706	Black Metal PVD	1.730	727	Brass Br. PVD	1.845
707	Black Metal Br. PVD	1.845	845	Dark Bronze	1.845
030	Copper PVD	1.730			



63348

Wall-mounted adjustable shower head with arm.
- 1/2” connections.
- Projection from wall to center 13-7/8”
- Total projection 18-3/4”
- Max flow rate 1.75 GPM

031	Chrome	1.087	726	Warm Bronze Br. PVD	1.715
149	Finox Br. Nickel	1.466	710	Brass PVD	1.605
299	Matte Black	1.466	727	Brass Br. PVD	1.715
720	Nickel PVD	1.605	246	Gold PVD	1.827
706	Black Metal PVD	1.605	716	Gold Br. PVD	1.827
707	Black Metal Br. PVD	1.715	845	Dark Bronze	1.715
030	Copper PVD	1.605	187	Aged Bronze	1.715
708	Copper Br. PVD	1.715	713	Antique Brass	1.715
735	Warm Bronze PVD	1.605	279	Matte White	1.466

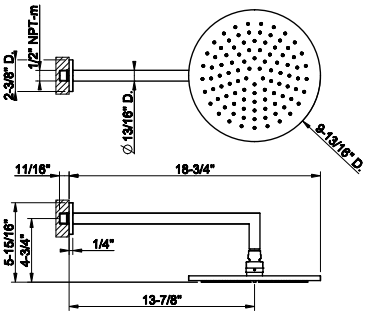



63352

Ceiling-mounted adjustable shower head with arm.
- 1/2” connections.
- Projection from ceiling 10-1/4”
- Max flow rate 1.75 GPM

031	Chrome	966	726	Warm Bronze Br. PVD	1.528
149	Finox Br. Nickel	1.306	710	Brass PVD	1.431
299	Matte Black	1.306	727	Brass Br. PVD	1.528
720	Nickel PVD	1.431	246	Gold PVD	1.624
706	Black Metal PVD	1.431	716	Gold Br. PVD	1.624
707	Black Metal Br. PVD	1.528	845	Dark Bronze	1.528
030	Copper PVD	1.431	187	Aged Bronze	1.528
708	Copper Br. PVD	1.528	713	Antique Brass	1.528
735	Warm Bronze PVD	1.431	279	Matte White	1.306

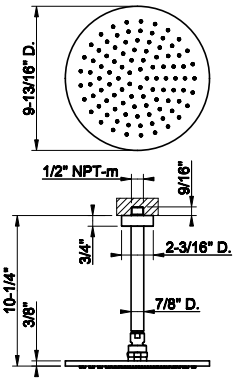



63350

Ceiling-mounted, shower head with arm, custom length
- 1/2” connections
- Projection from ceiling MIN 3-3/8” MAX 73-1/4”
- Max flow rate 1.75 GPM

031	Chrome	1.387	726	Warm Bronze Br. PVD	2.190
149	Finox Br. Nickel	1.870	710	Brass PVD	2.052
299	Matte Black	1.870	727	Brass Br. PVD	2.190
720	Nickel PVD	2.052	246	Gold PVD	2.333
706	Black Metal PVD	2.052	716	Gold Br. PVD	2.333
707	Black Metal Br. PVD	2.190	845	Dark Bronze	2.190
030	Copper PVD	2.052	187	Aged Bronze	2.190
708	Copper Br. PVD	2.190	713	Antique Brass	2.190
735	Warm Bronze PVD	2.052	279	Matte White	1.870

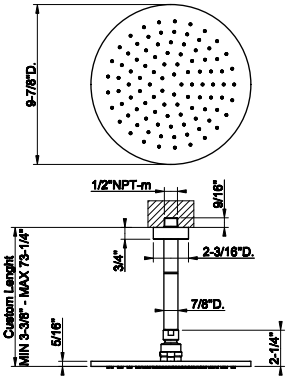



66142

Handshower and adjustable sliding rail set
- Adjustable bar
- Adjustable hook
- 59” Flex hose
- Wall elbow
- Max flow rate 1.75GPM. Insert in desired finish included. Can be combined with the insert 66600 and 66602 of the desired finish.

031	Chrome	2.399	707	Black Metal Br. PVD	3.792
149	Finox Br. Nickel	3.239	708	Copper Br. PVD	3.792
299	Matte Black	3.239	726	Warm Bronze Br. PVD	3.792
720	Nickel PVD	3.552	727	Brass Br. PVD	3.792
706	Black Metal PVD	3.552	845	Dark Bronze	3.792

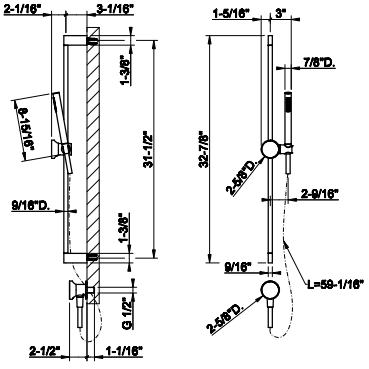

ORIGINI

32971

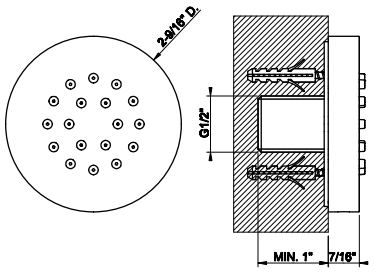

Round body spray
- 1/2” connections
- Max flow rate 1 GPM at 60 PSI



031	Chrome	552	726	Warm Bronze Br. PVD	873
149	Finox Br. Nickel	746	710	Brass PVD	840
299	Matte Black	746	727	Brass Br. PVD	873
147	Chrome Br.	766	246	Gold PVD	929
720	Nickel PVD	818	716	Gold Br. PVD	929
706	Black Metal PVD	818	845	Dark Bronze	873
707	Black Metal Br. PVD	873	187	Aged Bronze	873
030	Copper PVD	818	713	Antique Brass	873
708	Copper Br. PVD	873	279	Matte White	746
735	Warm Bronze PVD	840			

32985+32982

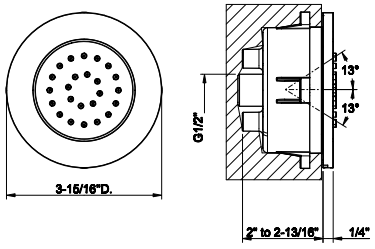

32985

In-wall rough valve for pivotable body spray 32982



031	Chrome	406

32982

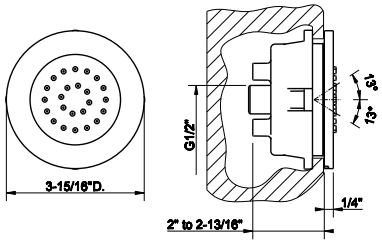

TRIM PARTS ONLY Round in-wall pivotable body spray
- 1/2” connections
- Requires in-wall rough valve 32985
- Max flow rate 1 GPM at60 PSI



031	Chrome	773	726	Warm Bronze Br. PVD	1.223
149	Finox Br. Nickel	1.045	710	Brass PVD	1.145
299	Matte Black	1.045	727	Brass Br. PVD	1.223
147	Chrome Br.	1.045	246	Gold PVD	1.300
720	Nickel PVD	1.145	716	Gold Br. PVD	1.300
706	Black Metal PVD	1.145	845	Dark Bronze	1.223
707	Black Metal Br. PVD	1.223	187	Aged Bronze	1.223
030	Copper PVD	1.145	713	Antique Brass	1.223
708	Copper Br. PVD	1.223	279	Matte White	1.045
735	Warm Bronze PVD	1.145			

65295

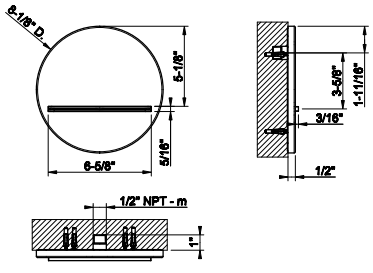

Wall-fixing cascade spout
- 1/2” connections
- Flow rate 4.8 GPM at 60 PSI

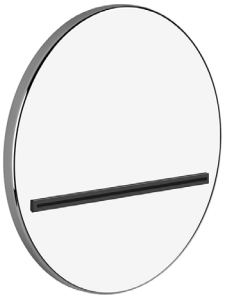

031	Chrome	1.937	726	Warm Bronze Br. PVD	3.058
149	Finox Br. Nickel	2.614	710	Brass PVD	2.864
299	Matte Black	2.614	727	Brass Br. PVD	3.058
720	Nickel PVD	2.864	246	Gold PVD	3.255
706	Black Metal PVD	2.864	716	Gold Br. PVD	3.255
707	Black Metal Br. PVD	3.058	845	Dark Bronze	3.058
030	Copper PVD	2.864	187	Aged Bronze	3.058
708	Copper Br. PVD	3.058	713	Antique Brass	3.058
735	Warm Bronze PVD	2.864	279	Matte White	2.614



66123

Handshower set
• Fixed hook.
• Wall elbow
• 59” flex hose
• Max flow rate 1.75 GPM. Can be combined with the insert 66600 and 66602of the desired finish.

031	Chrome	895	707	Black Metal Br. PVD	1.415
149	Finox Br. Nickel	1.210	708	Copper Br. PVD	1.415
299	Matte Black	1.210	726	Warm Bronze Br. PVD	1.415
720	Nickel PVD	1.325	727	Brass Br. PVD	1.415
706	Black Metal PVD	1.325	845	Dark Bronze	1.415

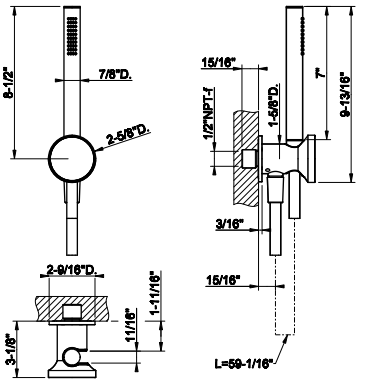



63329

Handshower set
• Fixed hook
• Wall elbow
• 59” flex hose
• Max flow rate 1.75 GPM

031	Chrome	847	735	Warm Bronze PVD	1.254
149	Finox Br. Nickel	1.141	726	Warm Bronze Br. PVD	1.337
299	Matte Black	1.141	710	Brass PVD	1.254
720	Nickel PVD	1.254	727	Brass Br. PVD	1.337
706	Black Metal PVD	1.254	845	Dark Bronze	1.337
707	Black Metal Br. PVD	1.337	187	Aged Bronze	1.337
030	Copper PVD	1.254	713	Antique Brass	1.337
708	Copper Br. PVD	1.337			

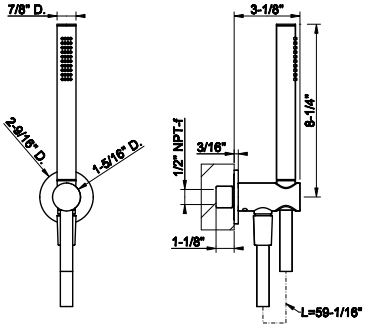



63099

Magnetic anti-limestone handshower set
• Fixed hook
• Wall elbow
• 59” Cromalux flex hose
• Max flow rate 1.75 GPM

031	Chrome	1.213	726	Warm Bronze Br. PVD	1.916
149	Finox Br. Nickel	1.638	710	Brass PVD	1.794
299	Matte Black	1.638	727	Brass Br. PVD	1.916
720	Nickel PVD	1.794	246	Gold PVD	2.037
706	Black Metal PVD	1.794	716	Gold Br. PVD	2.037
707	Black Metal Br. PVD	1.916	845	Dark Bronze	1.916
030	Copper PVD	1.794	187	Aged Bronze	1.916
708	Copper Br. PVD	1.916	713	Antique Brass	1.916
735	Warm Bronze PVD	1.794			

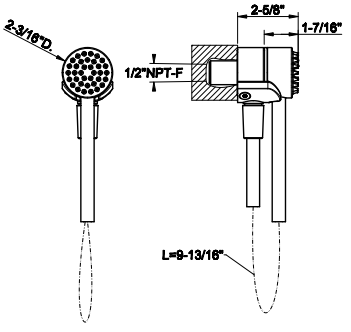



66161

Wall elbow with built in water intake and fixed hook
• 1/2” connection. Can be combined with the insert 66600 and 66602 of the desired finish.

031	Chrome	543	707	Black Metal Br. PVD	858
149	Finox Br. Nickel	733	708	Copper Br. PVD	858
299	Matte Black	733	726	Warm Bronze Br. PVD	858
720	Nickel PVD	805	727	Brass Br. PVD	858
706	Black Metal PVD	805	845	Dark Bronze	858

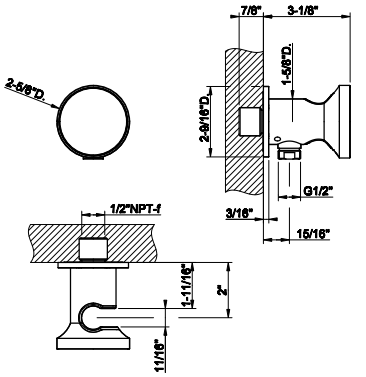

GESSI

ORIGINI

66169

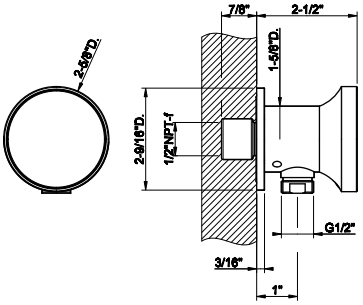

Wall elbow with backplate
• 1/2" connection. Can be combined with the insert 66600 and 66602 of the desired finish.



031	Chrome	563	707	Black Metal Br. PVD	891
149	Finox Br. Nickel	761	708	Copper Br. PVD	891
299	Matte Black	761	726	Warm Bronze Br. PVD	891
720	Nickel PVD	833	727	Brass Br. PVD	891
706	Black Metal PVD	833	845	Dark Bronze	891

66157

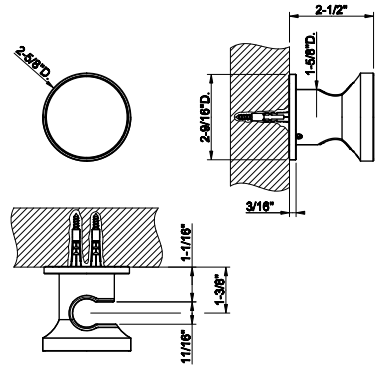

Fixed handshower hook. Can be combined with the insert 66600 and 66602 of the desired finish.



031	Chrome	518	707	Black Metal Br. PVD	820
149	Finox Br. Nickel	701	708	Copper Br. PVD	820
299	Matte Black	701	726	Warm Bronze Br. PVD	820
720	Nickel PVD	769	727	Brass Br. PVD	820
706	Black Metal PVD	769	845	Dark Bronze	820

63461

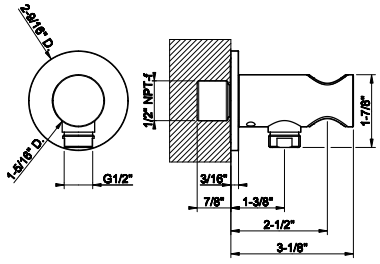

Wall elbow with built in water intake and fixed hook
• 1/2" connection



031	Chrome	457	735	Warm Bronze PVD	677
149	Finox Br. Nickel	617	726	Warm Bronze Br. PVD	723
299	Matte Black	617	710	Brass PVD	677
720	Nickel PVD	677	727	Brass Br. PVD	723
706	Black Metal PVD	677	845	Dark Bronze	723
707	Black Metal Br. PVD	723	187	Aged Bronze	723
030	Copper PVD	677	713	Antique Brass	723
708	Copper Br. PVD	723			

63469

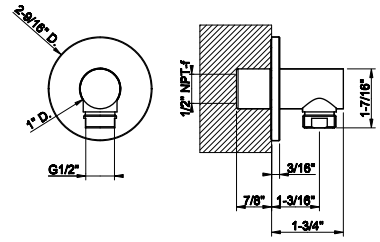

Wall-elbow with backplate
• 1/2" connection



031	Chrome	298	708	Copper Br. PVD	472
149	Finox Br. Nickel	404	735	Warm Bronze PVD	443
299	Matte Black	404	726	Warm Bronze Br. PVD	472
720	Nickel PVD	443	710	Brass PVD	443
706	Black Metal PVD	443	727	Brass Br. PVD	472
707	Black Metal Br. PVD	472	187	Aged Bronze	472
030	Copper PVD	443	713	Antique Brass	472

58157

Fixed handshower hook.



031	Chrome	245	726	Warm Bronze Br. PVD	387
149	Finox Br. Nickel	332	710	Brass PVD	363
299	Matte Black	332	727	Brass Br. PVD	387
720	Nickel PVD	363	246	Gold PVD	411
706	Black Metal PVD	363	716	Gold Br. PVD	411
707	Black Metal Br. PVD	387	845	Dark Bronze	387
030	Copper PVD	363	187	Aged Bronze	387
708	Copper Br. PVD	387	713	Antique Brass	387
735	Warm Bronze PVD	363			

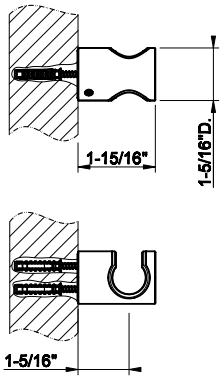

58160

Adjustable handshower hook.



031	Chrome	434	726	Warm Bronze Br. PVD	686
149	Finox Br. Nickel	586	710	Brass PVD	642
299	Matte Black	586	727	Brass Br. PVD	686
720	Nickel PVD	642	246	Gold PVD	728
706	Black Metal PVD	642	716	Gold Br. PVD	728
707	Black Metal Br. PVD	686	845	Dark Bronze	686
030	Copper PVD	642	187	Aged Bronze	686
708	Copper Br. PVD	686	713	Antique Brass	686
735	Warm Bronze PVD	642			

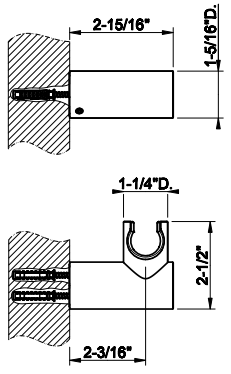

14372

Handshower
- Max flow rate 1.75 GPM



031	Chrome	134	726	Warm Bronze Br. PVD	394
149	Finox Br. Nickel	317	710	Brass PVD	371
299	Matte Black	225	727	Brass Br. PVD	394
720	Nickel PVD	371	246	Gold PVD	418
706	Black Metal PVD	371	716	Gold Br. PVD	418
707	Black Metal Br. PVD	394	845	Dark Bronze	394
030	Copper PVD	371	187	Aged Bronze	394
708	Copper Br. PVD	394	713	Antique Brass	394
735	Warm Bronze PVD	371	279	Matte White	317

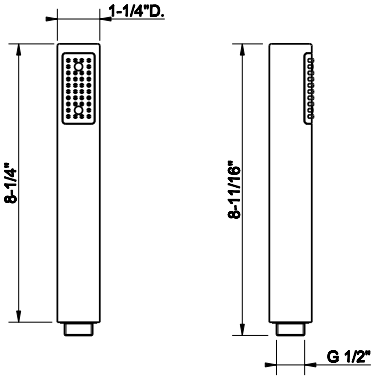

14370

Antilimestone handshower
- Single spray
- Max flow rate 1.75 GPM



031	Chrome	189	726	Warm Bronze Br. PVD	465
149	Finox Br. Nickel	377	710	Brass PVD	435
299	Matte Black	377	727	Brass Br. PVD	465
147	Chrome Br.	377	246	Gold PVD	493
720	Nickel PVD	435	716	Gold Br. PVD	493
706	Black Metal PVD	435	845	Dark Bronze	465
707	Black Metal Br. PVD	465	187	Aged Bronze	465
030	Copper PVD	435	713	Antique Brass	465
708	Copper Br. PVD	465	279	Matte White	377
735	Warm Bronze PVD	435			

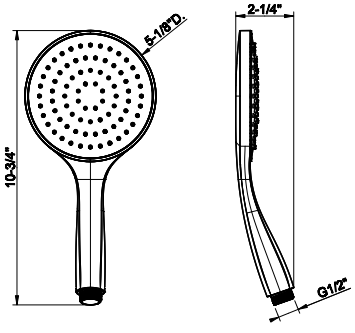

ORIGINI

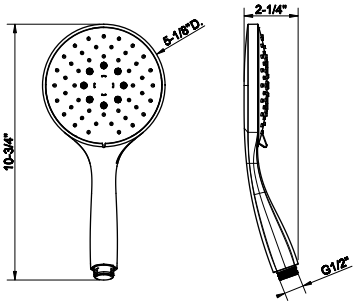

14376

Handshower with white insert
- 3-pattern spray
- Max flow rate 1.75 GPM



031	Chrome	390	726	Warm Bronze Br. PVD	656
149	Finox Br. Nickel	527	710	Brass PVD	616
299	Matte Black	527	727	Brass Br. PVD	656
147	Chrome Br.	527	246	Gold PVD	681
720	Nickel PVD	616	716	Gold Br. PVD	681
706	Black Metal PVD	616	845	Dark Bronze	656
707	Black Metal Br. PVD	656	187	Aged Bronze	656
030	Copper PVD	616	713	Antique Brass	656
708	Copper Br. PVD	656	279	Matte White	527
735	Warm Bronze PVD	616			

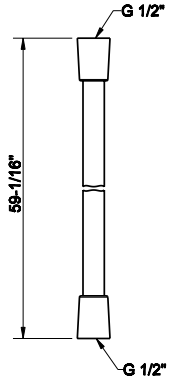

01637

59” flex hose



031	Chrome	134	726	Warm Bronze Br. PVD	214
149	Finox Br. Nickel	173	710	Brass PVD	203
299	Matte Black	173	727	Brass Br. PVD	214
147	Chrome Br.	173	246	Gold PVD	227
720	Nickel PVD	203	716	Gold Br. PVD	227
706	Black Metal PVD	203	845	Dark Bronze	214
707	Black Metal Br. PVD	214	187	Aged Bronze	214
030	Copper PVD	203	713	Antique Brass	214
708	Copper Br. PVD	214	279	Matte White	173
735	Warm Bronze PVD	203			

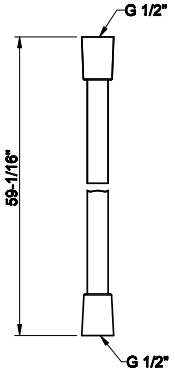

54137

59” black flex hose with options to change the metal ends with desired finish



031	Chrome	183	735	Warm Bronze PVD	290
299	Matte Black	241	726	Warm Bronze Br. PVD	283
720	Nickel PVD	248	710	Brass PVD	290
706	Black Metal PVD	290	727	Brass Br. PVD	283
707	Black Metal Br. PVD	283	845	Dark Bronze	248
030	Copper PVD	290	187	Aged Bronze	248
708	Copper Br. PVD	283	713	Antique Brass	248

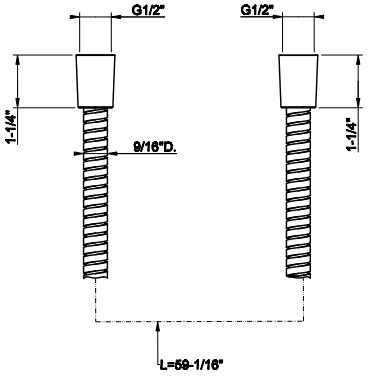

01724

Metal flexible hose, 59” length, 1/2” connector.



031	Chrome	196	726	Warm Bronze Br. PVD	308
149	Finox Br. Nickel	260	710	Brass PVD	288
299	Matte Black	260	727	Brass Br. PVD	308
720	Nickel PVD	308	246	Gold PVD	288
706	Black Metal PVD	288	716	Gold Br. PVD	341
707	Black Metal Br. PVD	308	845	Dark Bronze	308
030	Copper PVD	288	187	Aged Bronze	308
708	Copper Br. PVD	308	713	Antique Brass	308
735	Warm Bronze PVD	288	279	Matte White	259



ORIGINI
ACCESSORIES

66401

Wall-mounted soap dish, white

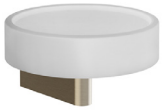

031	Chrome	439	726	Warm Bronze Br. PVD	693
149	Finox Br. Nickel	593	710	Brass PVD	648
299	Matte Black	593	727	Brass Br. PVD	693
720	Nickel PVD	648	246	Gold PVD	735
706	Black Metal PVD	648	716	Gold Br. PVD	735
707	Black Metal Br. PVD	693	845	Dark Bronze	693
030	Copper PVD	648	187	Aged Bronze	693
708	Copper Br. PVD	693	713	Antique Brass	693
735	Warm Bronze PVD	648	279	Matte White	593

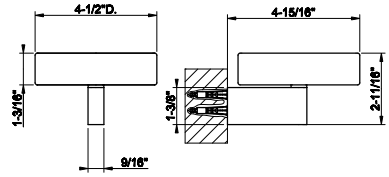

66402

Wall-mounted soap dish, black



031	Chrome	439	726	Warm Bronze Br. PVD	693
149	Finox Br. Nickel	593	710	Brass PVD	648
299	Matte Black	593	727	Brass Br. PVD	693
720	Nickel PVD	648	246	Gold PVD	735
706	Black Metal PVD	648	716	Gold Br. PVD	735
707	Black Metal Br. PVD	693	845	Dark Bronze	693
030	Copper PVD	648	187	Aged Bronze	693
708	Copper Br. PVD	693	713	Antique Brass	693
735	Warm Bronze PVD	648	279	Matte White	593

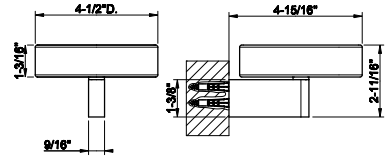

66407

Wall-mounted holder, white



031	Chrome	511	726	Warm Bronze Br. PVD	808
149	Finox Br. Nickel	690	710	Brass PVD	756
299	Matte Black	690	727	Brass Br. PVD	808
720	Nickel PVD	756	246	Gold PVD	858
706	Black Metal PVD	756	716	Gold Br. PVD	858
707	Black Metal Br. PVD	808	845	Dark Bronze	808
030	Copper PVD	756	187	Aged Bronze	808
708	Copper Br. PVD	808	713	Antique Brass	808
735	Warm Bronze PVD	756	279	Matte White	690

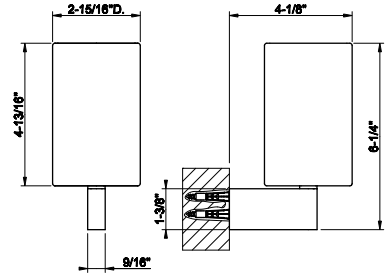

66408

Wall-mounted holder, black



031	Chrome	511	726	Warm Bronze Br. PVD	808
149	Finox Br. Nickel	690	710	Brass PVD	756
299	Matte Black	690	727	Brass Br. PVD	808
720	Nickel PVD	756	246	Gold PVD	858
706	Black Metal PVD	756	716	Gold Br. PVD	858
707	Black Metal Br. PVD	808	845	Dark Bronze	808
030	Copper PVD	756	187	Aged Bronze	808
708	Copper Br. PVD	808	713	Antique Brass	808
735	Warm Bronze PVD	756	279	Matte White	690

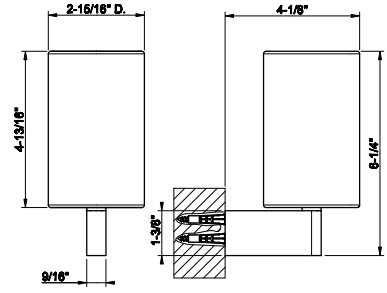

ORIGINI ACCESSORIES

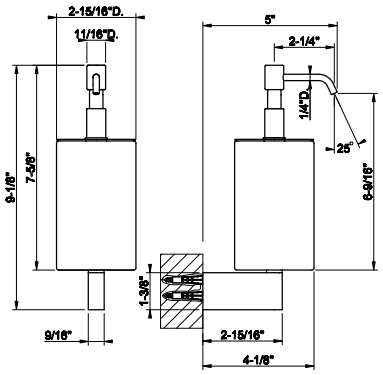

66413

Wall-mounted liquid soap dispenser , white



031	Chrome	818	726	Warm Bronze Br. PVD	1.293
149	Finox Br. Nickel	1.106	710	Brass PVD	1.210
299	Matte Black	1.106	727	Brass Br. PVD	1.293
720	Nickel PVD	1.210	246	Gold PVD	1.376
706	Black Metal PVD	1.210	716	Gold Br. PVD	1.376
707	Black Metal Br. PVD	1.293	845	Dark Bronze	1.293
030	Copper PVD	1.210	187	Aged Bronze	1.293
708	Copper Br. PVD	1.293	713	Antique Brass	1.293
735	Warm Bronze PVD	1.210	279	Matte White	1.106

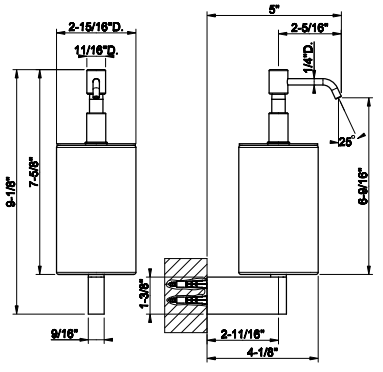

66414

Wall-mounted liquid soap dispenser - black



031	Chrome	818	726	Warm Bronze Br. PVD	1.293
149	Finox Br. Nickel	1.106	710	Brass PVD	1.210
299	Matte Black	1.106	727	Brass Br. PVD	1.293
720	Nickel PVD	1.210	246	Gold PVD	1.376
706	Black Metal PVD	1.210	716	Gold Br. PVD	1.376
707	Black Metal Br. PVD	1.293	845	Dark Bronze	1.293
030	Copper PVD	1.210	187	Aged Bronze	1.293
708	Copper Br. PVD	1.293	713	Antique Brass	1.293
735	Warm Bronze PVD	1.210	279	Matte White	1.106

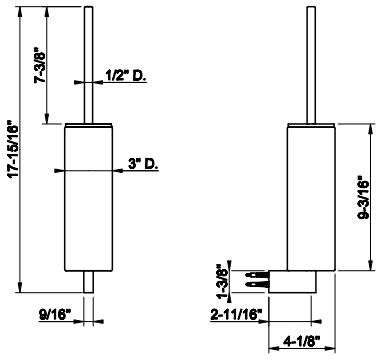

66419

Wall-mounted brush holder, white



031	Chrome	865	726	Warm Bronze Br. PVD	1.368
149	Finox Br. Nickel	1.170	710	Brass PVD	1.283
299	Matte Black	1.170	727	Brass Br. PVD	1.368
720	Nickel PVD	1.283	246	Gold PVD	1.455
706	Black Metal PVD	1.283	716	Gold Br. PVD	1.455
707	Black Metal Br. PVD	1.368	845	Dark Bronze	1.368
030	Copper PVD	1.283	187	Aged Bronze	1.368
708	Copper Br. PVD	1.368	713	Antique Brass	1.368
735	Warm Bronze PVD	1.283	279	Matte White	1.170

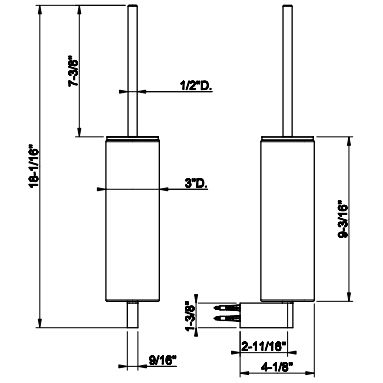

66420

Wall-mounted brush holder, black



031	Chrome	865	726	Warm Bronze Br. PVD	1.368
149	Finox Br. Nickel	1.170	710	Brass PVD	1.283
299	Matte Black	1.170	727	Brass Br. PVD	1.368
720	Nickel PVD	1.283	246	Gold PVD	1.455
706	Black Metal PVD	1.283	716	Gold Br. PVD	1.455
707	Black Metal Br. PVD	1.368	845	Dark Bronze	1.368
030	Copper PVD	1.283	187	Aged Bronze	1.368
708	Copper Br. PVD	1.368	713	Antique Brass	1.368
735	Warm Bronze PVD	1.283	279	Matte White	1.170

58525

Standing soap holder, white



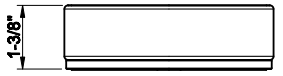

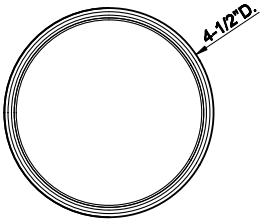

031	Chrome	391	726	Warm Bronze Br. PVD	618
149	Finox Br. Nickel	528	710	Brass PVD	580
299	Matte Black	528	727	Brass Br. PVD	618
720	Nickel PVD	580	246	Gold PVD	658
706	Black Metal PVD	580	716	Gold Br. PVD	658
707	Black Metal Br. PVD	618	845	Dark Bronze	618
030	Copper PVD	580	187	Aged Bronze	618
708	Copper Br. PVD	618	713	Antique Brass	618
735	Warm Bronze PVD	580	279	Matte White	528

58526

Standing soap holder, black



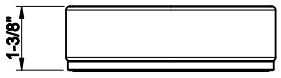

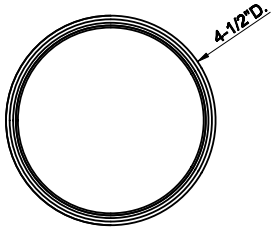

031	Chrome	391	726	Warm Bronze Br. PVD	618
149	Finox Br. Nickel	528	710	Brass PVD	580
299	Matte Black	528	727	Brass Br. PVD	618
720	Nickel PVD	580	246	Gold PVD	658
706	Black Metal PVD	580	716	Gold Br. PVD	658
707	Black Metal Br. PVD	618	845	Dark Bronze	618
030	Copper PVD	580	187	Aged Bronze	618
708	Copper Br. PVD	618	713	Antique Brass	618
735	Warm Bronze PVD	580	279	Matte White	528

58531

Standing tumbler holder, white



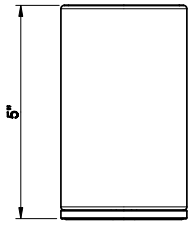

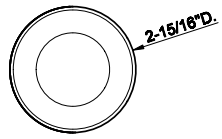

031	Chrome	436	726	Warm Bronze Br. PVD	689
149	Finox Br. Nickel	590	710	Brass PVD	647
299	Matte Black	590	727	Brass Br. PVD	689
720	Nickel PVD	647	246	Gold PVD	733
706	Black Metal PVD	647	716	Gold Br. PVD	733
707	Black Metal Br. PVD	689	845	Dark Bronze	689
030	Copper PVD	647	187	Aged Bronze	689
708	Copper Br. PVD	689	713	Antique Brass	689
735	Warm Bronze PVD	647	279	Matte White	590

58532

Standing tumbler holder, black



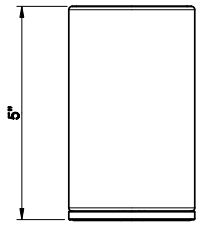

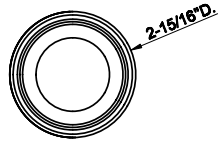

031	Chrome	436	726	Warm Bronze Br. PVD	689
149	Finox Br. Nickel	590	710	Brass PVD	647
299	Matte Black	590	727	Brass Br. PVD	689
720	Nickel PVD	647	246	Gold PVD	733
706	Black Metal PVD	647	716	Gold Br. PVD	733
707	Black Metal Br. PVD	689	845	Dark Bronze	689
030	Copper PVD	647	187	Aged Bronze	689
708	Copper Br. PVD	689	713	Antique Brass	689
735	Warm Bronze PVD	647	279	Matte White	590

ORIGINI ACCESSORIES

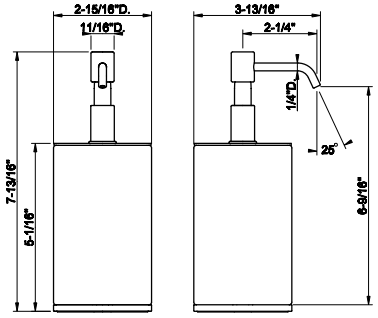

66437

Standing soap dispenser holder, white



031	Chrome	726	726	Warm Bronze Br. PVD	1.148
149	Finox Br. Nickel	980	710	Brass PVD	1.076
299	Matte Black	980	727	Brass Br. PVD	1.148
720	Nickel PVD	1.076	246	Gold PVD	1.221
706	Black Metal PVD	1.076	716	Gold Br. PVD	1.221
707	Black Metal Br. PVD	1.148	845	Dark Bronze	1.148
030	Copper PVD	1.076	187	Aged Bronze	1.148
708	Copper Br. PVD	1.148	713	Antique Brass	1.148
735	Warm Bronze PVD	1.076	279	Matte White	980

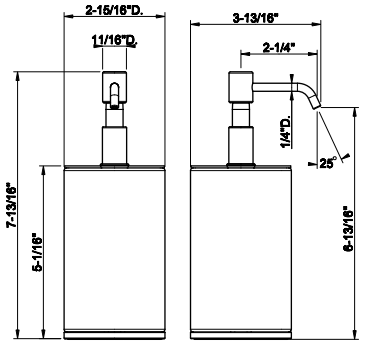

66438

Standing soap dispenser holder, black



031	Chrome	726	726	Warm Bronze Br. PVD	1.148
149	Finox Br. Nickel	980	710	Brass PVD	1.076
299	Matte Black	980	727	Brass Br. PVD	1.148
720	Nickel PVD	1.076	246	Gold PVD	1.221
706	Black Metal PVD	1.076	716	Gold Br. PVD	1.221
707	Black Metal Br. PVD	1.148	845	Dark Bronze	1.148
030	Copper PVD	1.076	187	Aged Bronze	1.148
708	Copper Br. PVD	1.148	713	Antique Brass	1.148
735	Warm Bronze PVD	1.076	279	Matte White	980

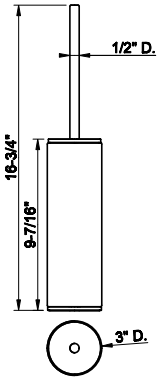

58543

Standing brush holder, white



031	Chrome	848	726	Warm Bronze Br. PVD	1.340
149	Finox Br. Nickel	1.145	710	Brass PVD	1.256
299	Matte Black	1.145	727	Brass Br. PVD	1.340
720	Nickel PVD	1.256	246	Gold PVD	1.424
706	Black Metal PVD	1.256	716	Gold Br. PVD	1.424
707	Black Metal Br. PVD	1.340	845	Dark Bronze	1.340
030	Copper PVD	1.256	187	Aged Bronze	1.340
708	Copper Br. PVD	1.340	713	Antique Brass	1.340
735	Warm Bronze PVD	1.256	279	Matte White	1.145

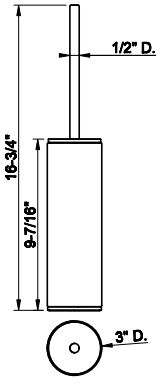

58544

Standing brush holder, black



031	Chrome	848	726	Warm Bronze Br. PVD	1.340
149	Finox Br. Nickel	1.145	710	Brass PVD	1.256
299	Matte Black	1.145	727	Brass Br. PVD	1.340
720	Nickel PVD	1.141	246	Gold PVD	1.424
706	Black Metal PVD	1.256	716	Gold Br. PVD	1.424
707	Black Metal Br. PVD	1.340	845	Dark Bronze	1.340
030	Copper PVD	1.256	187	Aged Bronze	1.340
708	Copper Br. PVD	1.340	713	Antique Brass	1.340
735	Warm Bronze PVD	1.256	279	Matte White	1.145

66455

Horizontal/Vertical paper-roll holder



031	Chrome	401	726	Warm Bronze Br. PVD	633
149	Finox Br. Nickel	541	710	Brass PVD	593
299	Matte Black	541	727	Brass Br. PVD	633
720	Nickel PVD	593	246	Gold PVD	673
706	Black Metal PVD	593	716	Gold Br. PVD	673
707	Black Metal Br. PVD	633	845	Dark Bronze	633
030	Copper PVD	593	187	Aged Bronze	633
708	Copper Br. PVD	633	713	Antique Brass	633
735	Warm Bronze PVD	593	279	Matte White	541

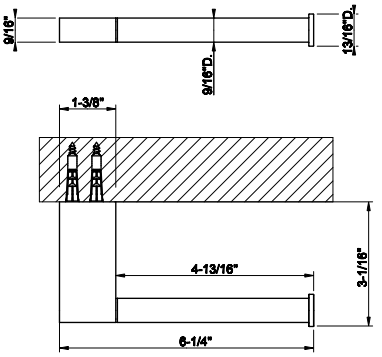

66500

12" Towel rail



031	Chrome	520	726	Warm Bronze Br. PVD	823
149	Finox Br. Nickel	703	710	Brass PVD	771
299	Matte Black	703	727	Brass Br. PVD	823
720	Nickel PVD	771	246	Gold PVD	876
706	Black Metal PVD	771	716	Gold Br. PVD	876
707	Black Metal Br. PVD	823	845	Dark Bronze	823
030	Copper PVD	771	187	Aged Bronze	823
708	Copper Br. PVD	823	713	Antique Brass	823
735	Warm Bronze PVD	771	279	Matte White	703

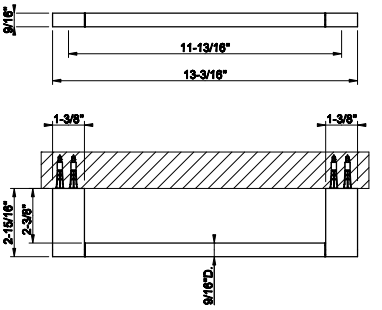

66502

18" Towel rail



031	Chrome	556	726	Warm Bronze Br. PVD	878
149	Finox Br. Nickel	750	710	Brass PVD	823
299	Matte Black	750	727	Brass Br. PVD	878
720	Nickel PVD	823	246	Gold PVD	933
706	Black Metal PVD	823	716	Gold Br. PVD	933
707	Black Metal Br. PVD	878	845	Dark Bronze	878
030	Copper PVD	823	187	Aged Bronze	878
708	Copper Br. PVD	878	713	Antique Brass	878
735	Warm Bronze PVD	823	279	Matte White	750

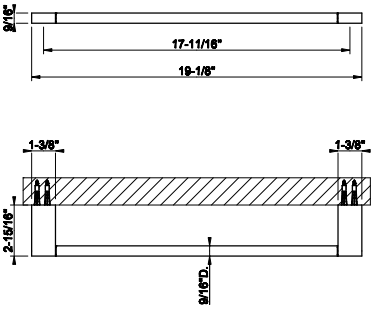

66504

24" Towel rail



031	Chrome	590	726	Warm Bronze Br. PVD	933
149	Finox Br. Nickel	799	710	Brass PVD	876
299	Matte Black	799	727	Brass Br. PVD	933
720	Nickel PVD	876	246	Gold PVD	993
706	Black Metal PVD	876	716	Gold Br. PVD	993
707	Black Metal Br. PVD	933	845	Dark Bronze	933
030	Copper PVD	876	187	Aged Bronze	933
708	Copper Br. PVD	933	713	Antique Brass	933
735	Warm Bronze PVD	876	279	Matte White	799

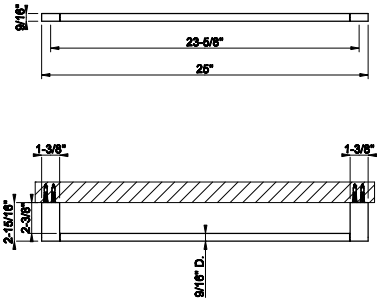

66521

Wall-mounted hanger. Finishing insert included.
Can be combined with different finishes with insert 66600 or insert ART 66602

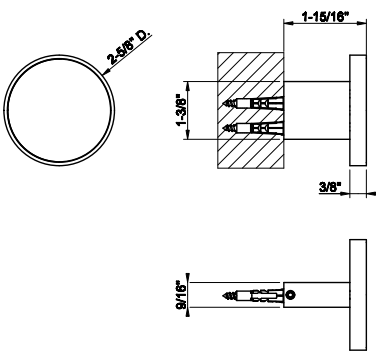



031	Chrome	371	726	Warm Bronze Br. PVD	586
149	Finox Br. Nickel	501	710	Brass PVD	551
299	Matte Black	501	727	Brass Br. PVD	586
720	Nickel PVD	551	246	Gold PVD	624
706	Black Metal PVD	551	716	Gold Br. PVD	624
707	Black Metal Br. PVD	586	845	Dark Bronze	586
030	Copper PVD	551	187	Aged Bronze	586
708	Copper Br. PVD	586	713	Antique Brass	586
735	Warm Bronze PVD	551	279	Matte White	501

66523

Wall mounted garment hook, UNITO

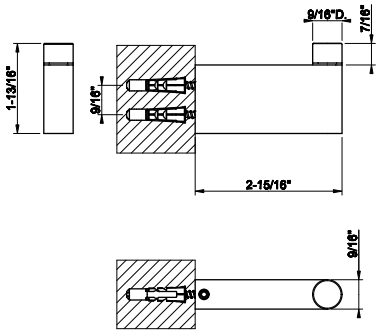



031	Chrome	266	726	Warm Bronze Br. PVD	421
149	Finox Br. Nickel	360	710	Brass PVD	394
299	Matte Black	360	727	Brass Br. PVD	421
720	Nickel PVD	394	246	Gold PVD	448
706	Black Metal PVD	394	716	Gold Br. PVD	448
707	Black Metal Br. PVD	421	845	Dark Bronze	421
030	Copper PVD	394	187	Aged Bronze	421
708	Copper Br. PVD	421	713	Antique Brass	421
735	Warm Bronze PVD	394	279	Matte White	360

66511

12” Towel rail for glass fixing

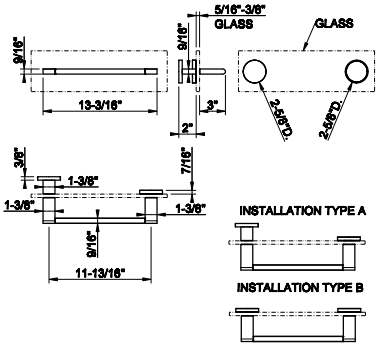



031	Chrome	1.333	726	Warm Bronze Br. PVD	2.107
149	Finox Br. Nickel	1.800	710	Brass PVD	1.973
299	Matte Black	1.800	727	Brass Br. PVD	2.107
720	Nickel PVD	1.973	246	Gold PVD	2.240
706	Black Metal PVD	1.973	716	Gold Br. PVD	2.240
707	Black Metal Br. PVD	2.107	845	Dark Bronze	2.107
030	Copper PVD	1.973	187	Aged Bronze	2.107
708	Copper Br. PVD	2.107	713	Antique Brass	2.107
735	Warm Bronze PVD	1.973	279	Matte White	1.800

66513

18” Towel rail for glass fixing

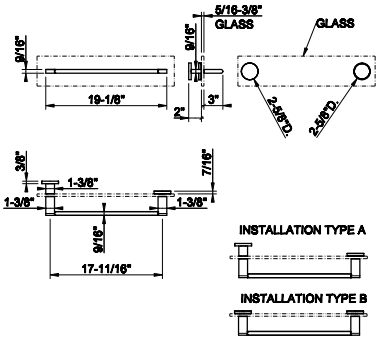



031	Chrome	1.581	726	Warm Bronze Br. PVD	2.497
149	Finox Br. Nickel	2.135	710	Brass PVD	2.340
299	Matte Black	2.135	727	Brass Br. PVD	2.497
720	Nickel PVD	2.340	246	Gold PVD	2.655
706	Black Metal PVD	2.340	716	Gold Br. PVD	2.655
707	Black Metal Br. PVD	2.497	845	Dark Bronze	2.497
030	Copper PVD	2.340	187	Aged Bronze	2.497
708	Copper Br. PVD	2.497	713	Antique Brass	2.497
735	Warm Bronze PVD	2.340	279	Matte White	2.135

66515

24” Towel rail for glass fixing



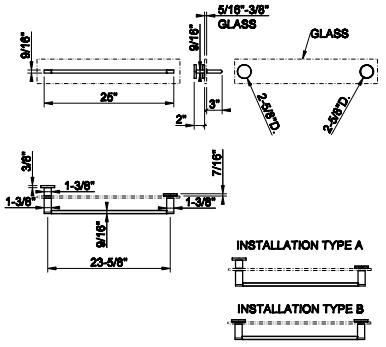

031	Chrome	1.617	726	Warm Bronze Br. PVD	2.557
149	Finox Br. Nickel	2.185	710	Brass PVD	2.395
299	Matte Black	2.185	727	Brass Br. PVD	2.557
720	Nickel PVD	2.395	246	Gold PVD	2.717
706	Black Metal PVD	2.395	716	Gold Br. PVD	2.717
707	Black Metal Br. PVD	2.557	845	Dark Bronze	2.557
030	Copper PVD	2.395	187	Aged Bronze	2.557
708	Copper Br. PVD	2.557	713	Antique Brass	2.557
735	Warm Bronze PVD	2.395	279	Matte White	2.185

58424

Safety grip-handle for bathtub and shower enclosure
• 18” length



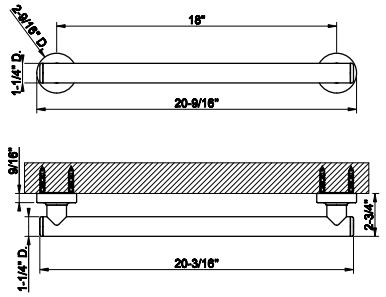

031	Chrome	1.932	726	Warm Bronze Br. PVD	3.054
149	Finox Br. Nickel	2.611	710	Brass PVD	2.862
299	Matte Black	2.611	727	Brass Br. PVD	3.056
720	Nickel PVD	2.862	246	Gold PVD	3.243
706	Black Metal PVD	2.862	716	Gold Br. PVD	3.243
707	Black Metal Br. PVD	3.056	845	Dark Bronze	3.056
030	Copper PVD	2.862	187	Aged Bronze	3.056
708	Copper Br. PVD	3.056	713	Antique Brass	3.056
735	Warm Bronze PVD	2.862	279	Matte White	2.611

58430

Safety grip-handle for bathtub and shower enclosure
• 24” length



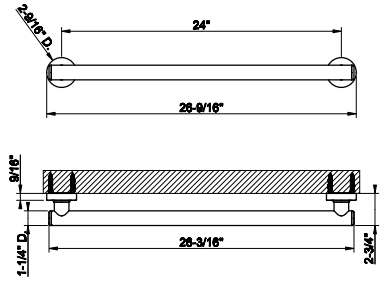

031	Chrome	1.967	726	Warm Bronze Br. PVD	3.108
149	Finox Br. Nickel	2.656	710	Brass PVD	2.911
299	Matte Black	2.656	727	Brass Br. PVD	3.108
720	Nickel PVD	2.911	246	Gold PVD	3.304
706	Black Metal PVD	2.911	716	Gold Br. PVD	3.304
707	Black Metal Br. PVD	3.108	845	Dark Bronze	3.108
030	Copper PVD	2.911	187	Aged Bronze	3.108
708	Copper Br. PVD	3.108	713	Antique Brass	3.108
735	Warm Bronze PVD	2.911	279	Matte White	2.656

58432

Safety grip-handle for bathtub and shower enclosure
• 36” length



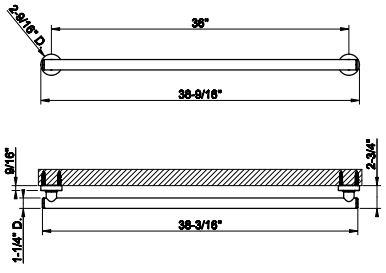

031	Chrome	2.165	726	Warm Bronze Br. PVD	3.419
149	Finox Br. Nickel	2.921	710	Brass PVD	3.203
299	Matte Black	2.921	727	Brass Br. PVD	3.419
720	Nickel PVD	3.203	246	Gold PVD	3.637
706	Black Metal PVD	3.203	716	Gold Br. PVD	3.637
707	Black Metal Br. PVD	3.419	845	Dark Bronze	3.419
030	Copper PVD	3.203	187	Aged Bronze	3.419
708	Copper Br. PVD	3.419	713	Antique Brass	3.419
735	Warm Bronze PVD	3.203	279	Matte White	2.921

ORIGINI ACCESSORIES

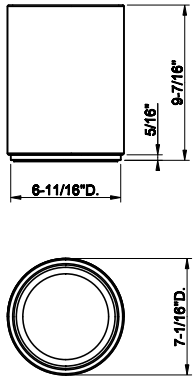

45590

White waste-paper basket



031	Chrome	1.056	726	Warm Bronze Br. PVD	1.663
149	Finox Br. Nickel	1.369	710	Brass PVD	1.559
299	Matte Black	1.316	727	Brass Br. PVD	1.663
720	Nickel PVD	1.559	246	Gold PVD	1.775
706	Black Metal PVD	1.559	716	Gold Br. PVD	1.775
707	Black Metal Br. PVD	1.663	845	Dark Bronze	1.663
030	Copper PVD	1.559	187	Aged Bronze	1.663
708	Copper Br. PVD	1.663	713	Antique Brass	1.663
735	Warm Bronze PVD	1.559	279	Matte White	1.316

66600

Insert

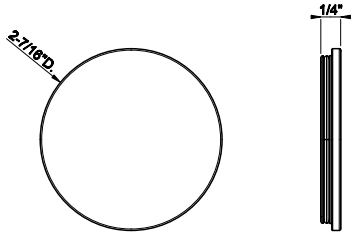



031	Chrome	126	299	Matte Black	171
275	Matte Cipria	171	720	Nickel PVD	186
273	Matte Greige	171	706	Black Metal PVD	186
277	Glossy Ocra	198	707	Black Metal Br. PVD	198
280	Matte Ocra	171	708	Copper Br. PVD	198
278	Glossy Coral	198	726	Warm Bronze Br. PVD	198
281	Matte Coral	171	727	Brass Br. PVD	198
276	Matte Agave	171	845	Dark Bronze	198
149	Finox Br. Nickel	171			

66602

Insert ART

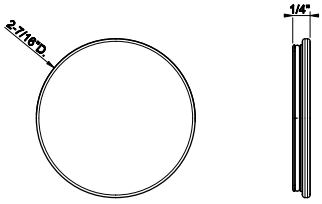

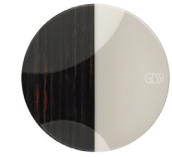

290	Materic	226	287	Warm	226
289	Accent	226	286	Neutral	226
288	Nature	226			


GESSI
ORIGINI
TOTAL LOOK

54611



Flush Actuator Plate
•Stainless steel
•Compatible with GEBERIT models: 111.597.001, 111.902.005, 111.798.00.1, 111.335.00.5
•Without visible fixing system

031	Chrome	1.228	708	Copper Br. PVD	1.813
239	Steel Br.	1.228	735	Warm Bronze PVD	1.813
275	Matte Cipria	1.653	726	Warm Bronze Br. PVD	1.813
273	Matte Greige	1.653	710	Brass PVD	1.813
280	Matte Ocra	1.653	727	Brass Br. PVD	1.813
281	Matte Coral	1.653	246	Gold PVD	2.058
276	Matte Agave	1.653	716	Gold Br. PVD	2.058
299	Matte Black	1.653	845	Dark Bronze	1.813
720	Nickel PVD	1.813	187	Aged Bronze	1.813
706	Black Metal PVD	1.813	713	Antique Brass	1.813
707	Black Metal Br. PVD	1.813	279	Matte White	1.653
030	Copper PVD	1.813			

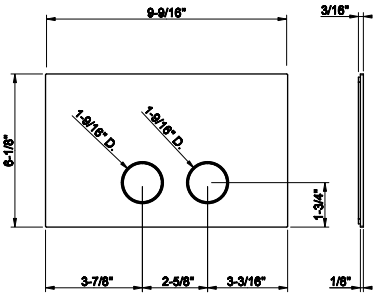

66601



Countertop washbasin in Cristalplant®, without overflow drain. Basin waste 01313 not included

521	Cristalplant Matt White	3.094	508	Cristalplant Matt Agave	4.698
511	Cristalplant Matt Black	4.698	507	Cristalplant Matt Cipria	4.698
510	Cristalplant Matt Coral	4.698	506	Cristalplant Matt Greige	4.698
509	Cristalplant Matt Ocra	4.698			

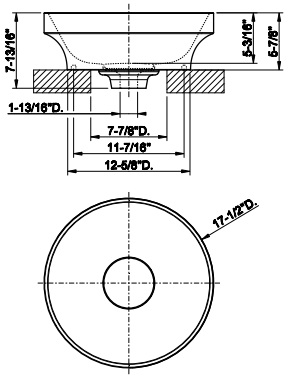

01314



Grille free-flow waste

031	Chrome	289

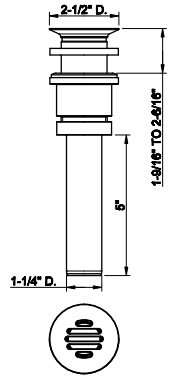

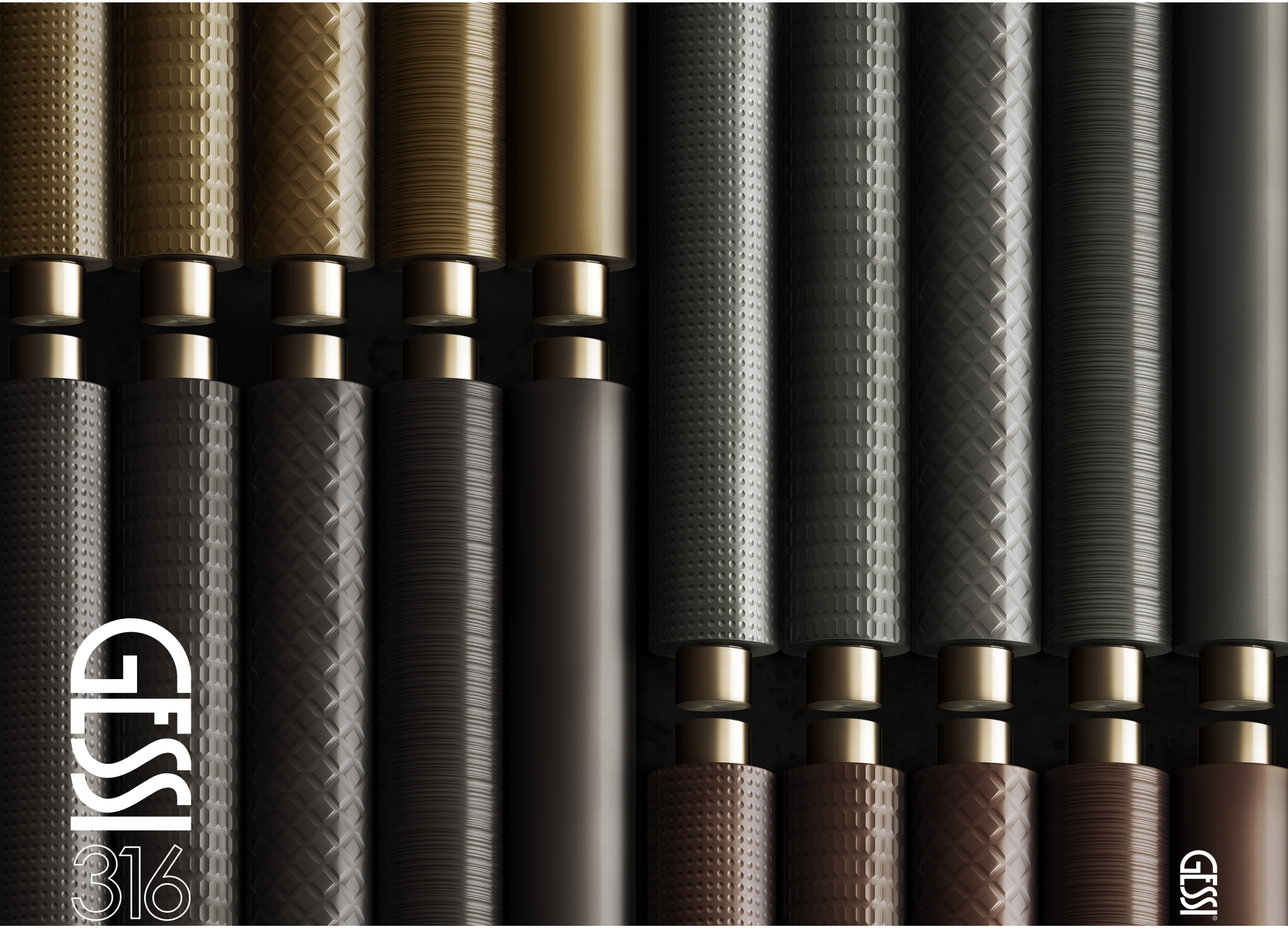
GESSI 316
GESSI

	FLESSA	TRAME	INTRECCIO	MECCANICA	CESELLO
	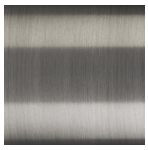		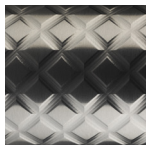	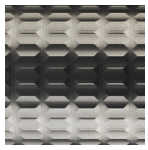	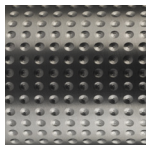

#239 Steel Brushed

	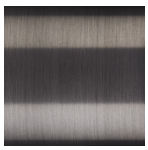			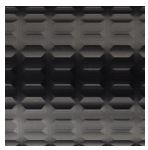	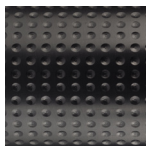

#707 Black Metal Brushed PVD

				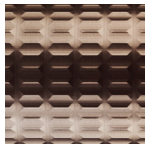	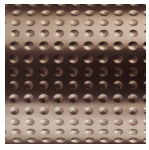

#708 Copper Brushed PVD

			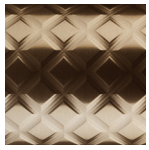	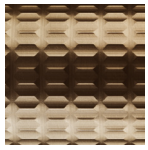	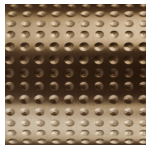

#726 Warm Bronze Brushed PVD

			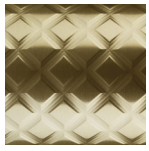	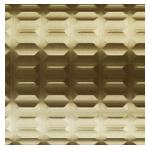	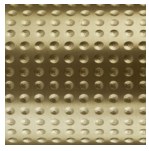

#727 Brass Brushed PVD

				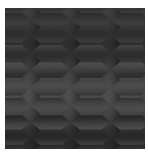	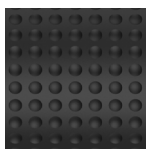

#299 Matte Black



GESSI316



54002

Single lever washbasin mixer without pop-up assembly
- Spout projection 4-13/16”
- Height 6-1/4”
- Drain not included - See DRAINSsection
- Max flow rate 1.2 GPM
- ADA compliant
- Handle kit

239	Steel Br.	993	708	Copper Br. PVD	1.469
299	Matte Black	1.340	726	Warm Bronze Br. PVD	1.469
707	Black Metal Br. PVD	1.469	727	Brass Br. PVD	1.469

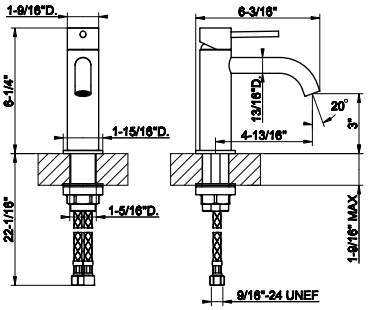



54009

Tall single lever washbasin mixer without pop-up assembly
- Spout projection 4-13/16”
- Height 12”
- Drain not included - See DRAINS section
- Max flow rate 1.2 GPM
- ADA compliant
- Handle kit

239	Steel Br.	1.236	708	Copper Br. PVD	1.829
299	Matte Black	1.669	726	Warm Bronze Br. PVD	1.829
707	Black Metal Br. PVD	1.829	727	Brass Br. PVD	1.829

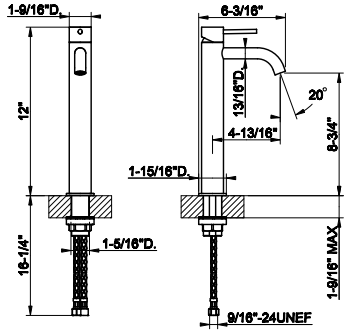



54006

Tall single lever washbasin mixer without pop-up assembly
- Extended spout projection 6-1/8”
- Height 12”
- Drain not included - See DRAINS section
- Max flow rate 1.2 GPM
- ADA compliant
- Handle kit

239	Steel Br.	1.260	708	Copper Br. PVD	1.863
299	Matte Black	1.700	726	Warm Bronze Br. PVD	1.863
707	Black Metal Br. PVD	1.863	727	Brass Br. PVD	1.863

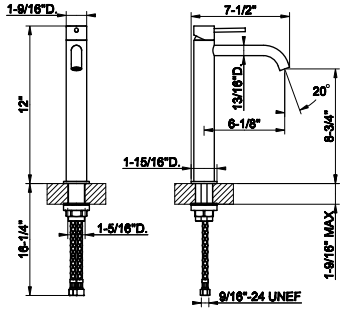



54012

Widespread washbasin mixer without pop-up assembly
- Spout projection 6-1/8”
- Height 8-1/16”
- 1/2” connections
- Drain not included - See DRAINS section
- Max flow rate 1.2 GPM
- ADA compliant
- Handle kit

239	Steel Br.	1.829	708	Copper Br. PVD	2.706
299	Matte Black	2.470	726	Warm Bronze Br. PVD	2.706
707	Black Metal Br. PVD	2.706	727	Brass Br. PVD	2.706

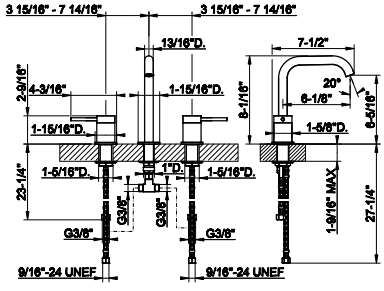

54197+54088

54197

Wall-mounted washbasin mixer rough valve
• Drain not included - See DRAINS section

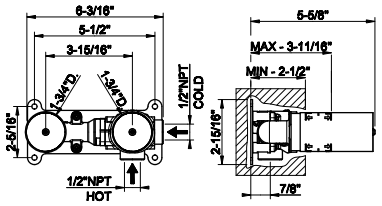



239	Steel Br.	809

54088

TRIM PARTS ONLY Wall-mounted washbasin mixer trim
• Spout projection 5” - 5-3/4”
• Drain not included - See DRAINS section
• Requires in-wall rough valve 54197
• Max flow rate 1.2 GPM
• ADA compliant
• Handle kit

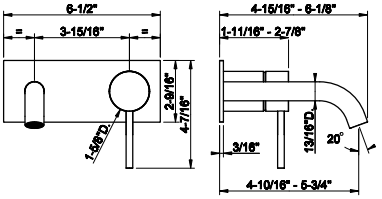



239	Steel Br.	1.052	708	Copper Br. PVD	1.556
299	Matte Black	1.421	726	Warm Bronze Br. PVD	1.556
707	Black Metal Br. PVD	1.556	727	Brass Br. PVD	1.556

54197+54090

54197

Wall-mounted washbasin mixer rough valve
• Drain not included - See DRAINS section

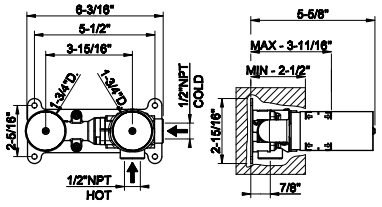



239	Steel Br.	809

54090

TRIM PARTS ONLY Wall-mounted washbasin mixer trim
• Spout projection 7-1/8” - 7-7/8”
• Drain not included - See DRAINS section
• Requires in-wall rough valve 54197
• Max flow rate 1.2 GPM
• ADA compliant
• Handle kit

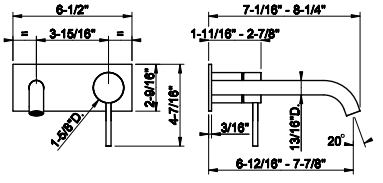



239	Steel Br.	1.075	708	Copper Br. PVD	1.591
299	Matte Black	1.452	726	Warm Bronze Br. PVD	1.591
707	Black Metal Br. PVD	1.591	727	Brass Br. PVD	1.591

54197

Wall-mounted washbasin mixer rough valve
• Drain not included - See DRAINS section



54197+54083

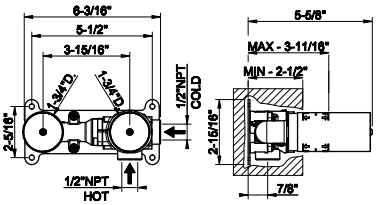

239	Steel Br.	809			

54083

TRIM PARTS ONLY Wall-mounted washbasin mixer trim
• Spout projection 5-5/16" - 5-3/4"
• Drain not included - See DRAINS section
• Requires in-wall rough valve 54197
• Max flow rate 1.2 GPM
• ADA compliant
• Handle kit



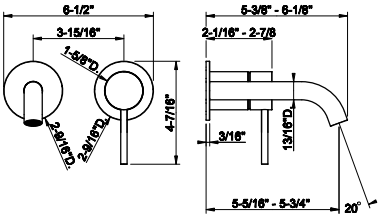

239	Steel Br.	918	708	Copper Br. PVD	1.360
299	Matte Black	1.241	726	Warm Bronze Br. PVD	1.360
707	Black Metal Br. PVD	1.360	727	Brass Br. PVD	1.360

54197

Wall-mounted washbasin mixer rough valve
• Drain not included - See DRAINS section



54197+54086

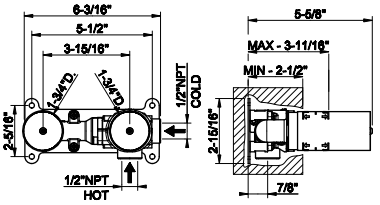

239	Steel Br.	809			

54086

TRIM PARTS ONLY Wall-mounted washbasin mixer trim
• Spout projection 7-1/8" - 7-7/8"
• Drain not included - See DRAINS section
• Requires in-wall rough valve 54197
• Max flow rate 1.2 GPM
• ADA compliant
• Handle kit



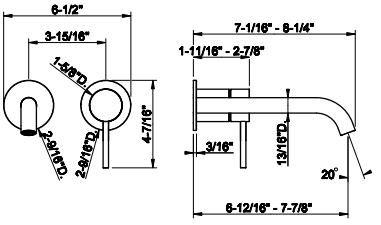

239	Steel Br.	942	708	Copper Br. PVD	1.395
299	Matte Black	1.274	726	Warm Bronze Br. PVD	1.395
707	Black Metal Br. PVD	1.395	727	Brass Br. PVD	1.395

48089+54094

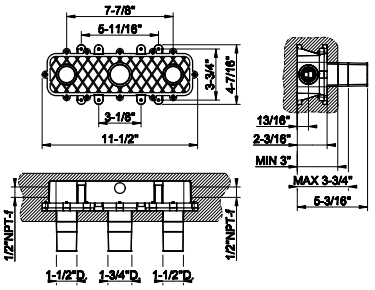

48089

Wall-mounted washbasin mixer rough valve
- Drain not included - See DRAINS section

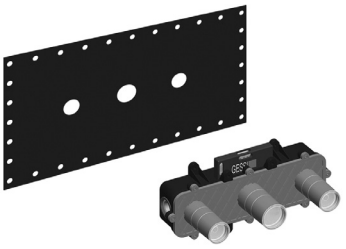

031	Chrome	1.069

54094

TRIM PARTS ONLY Wall-mounted washbasin mixer trim
- Spout projection 7-7/8" - 7-1/8"
- Drain not included - See DRAINS section
- Requires in-wall rough valve 48089
- Max flow rate 1.2 GPM
- ADA compliant
- Handle kit

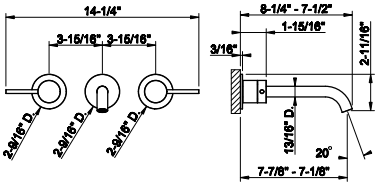



239	Steel Br.	1.492	708	Copper Br. PVD	2.208
299	Matte Black	2.015	726	Warm Bronze Br. PVD	2.208
707	Black Metal Br. PVD	2.208	727	Brass Br. PVD	2.208

54091

Medium basin spout

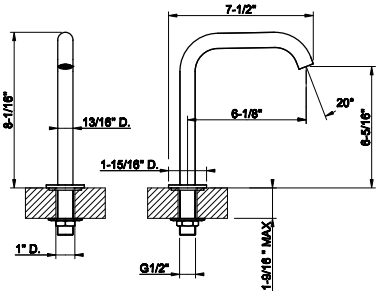



239	Steel Br.	656	708	Copper Br. PVD	968
299	Matte Black	884	726	Warm Bronze Br. PVD	968
707	Black Metal Br. PVD	968	727	Brass Br. PVD	968

54093

High basin spout

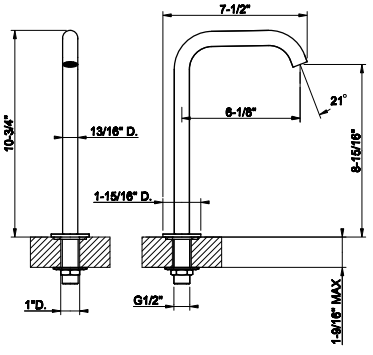



239	Steel Br.	684	708	Copper Br. PVD	1.012
299	Matte Black	923	726	Warm Bronze Br. PVD	1.012
707	Black Metal Br. PVD	1.012	727	Brass Br. PVD	1.012

54010

Medium wall-mounted spout basin



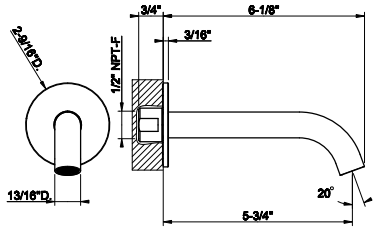

239	Steel Br.	483	708	Copper Br. PVD	713
299	Matte Black	650	726	Warm Bronze Br. PVD	713
707	Black Metal Br. PVD	713	727	Brass Br. PVD	713

54110

Long wall-mounted spout basin



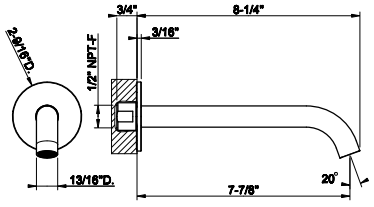

239	Steel Br.	509	708	Copper Br. PVD	750
299	Matte Black	684	726	Warm Bronze Br. PVD	750
707	Black Metal Br. PVD	750	727	Brass Br. PVD	750

54099

Ceiling-mounted washbasin spout only
- Spout length 63”
- Drain not included - See DRAINS section
- Requires mixer control 54109 +53112 or 54005
- Max flow rate 1.2 GPM



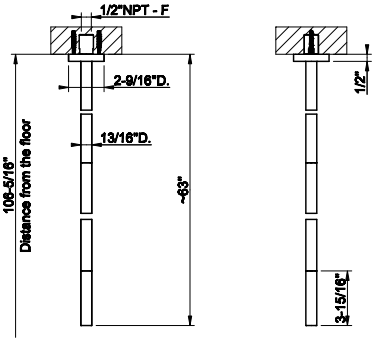

239	Steel Br.	2.217	708	Copper Br. PVD	3.280
299	Matte Black	2.993	726	Warm Bronze Br. PVD	3.280
707	Black Metal Br. PVD	3.280	727	Brass Br. PVD	3.280

GESSI316 FLESSA

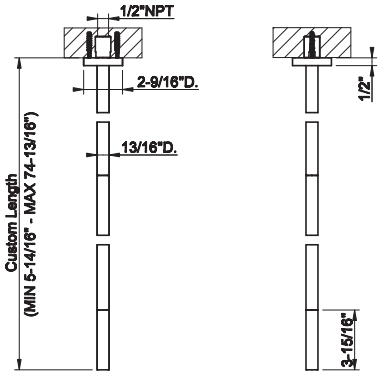

54096

Ceiling-mounted washbasin spout only
- Custom length: Minimum 5-14/16 ” - Maximum 74-13/16”
- Drain not included - See DRAINS section
- Requires mixer control 54019 + 53112 or 54005
- Max flow rate 1.2 GPM



239	Steel Br.	2.926	708	Copper Br. PVD	4.331
299	Matte Black	3.950	726	Warm Bronze Br. PVD	4.331
707	Black Metal Br. PVD	4.331	727	Brass Br. PVD	4.331

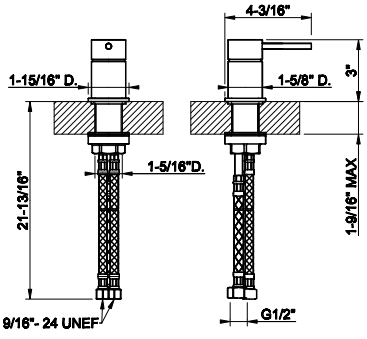

54005

Deck mounted washbasin mixer control (Flessa)
- For spout 54099 or 54096
- 1/2” connections
- Drain not included
- ADA compliant



239	Steel Br.	749	708	Copper Br. PVD	1.109
299	Matte Black	1.010	726	Warm Bronze Br. PVD	1.109
707	Black Metal Br. PVD	1.109	727	Brass Br. PVD	1.109

53112

Wall-mounted Basin/bath mixer rough valve. One exit



53112+54019

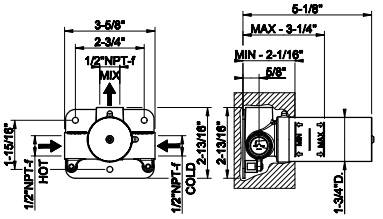

239	Steel Br.	449

54019

TRIM PARTS ONLY Wall-mounted washbasin mixer control
- For spouts 54099 or 54096
- 1/2” connections
- Drain not included - See DRAINS section
- Requires in-wall rough valve 53112
- ADA compliant
- Handle kit



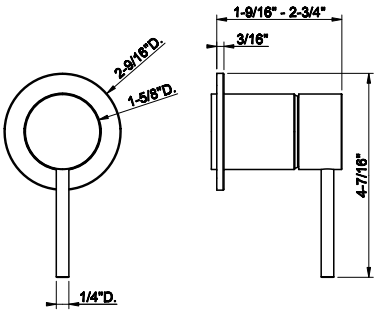

239	Steel Br.	490	708	Copper Br. PVD	726
299	Matte Black	662	726	Warm Bronze Br. PVD	726
707	Black Metal Br. PVD	726	727	Brass Br. PVD	726



GESSI316



54302

Single lever washbasin mixer without pop-up assembly
•Spout projection 4-13/16”
•Height 6-1/4”
•Drain not included - See DRAINS section
•Max flow rate 1.2 GPM
•ADA compliant
•Handle kit

239	Steel Br.	1.190	726	Warm Bronze Br. PVD	1.761
707	Black Metal Br. PVD	1.761	727	Brass Br. PVD	1.761
708	Copper Br. PVD	1.761			

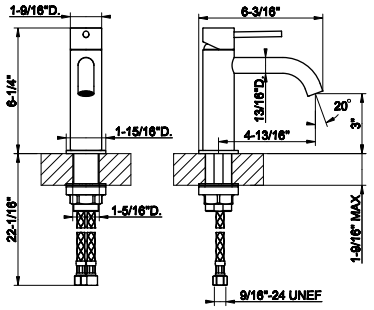



54309

Tall single lever washbasin mixer without pop-up assembly
• Spout projection 4-13/16”
• Height 12”
• Drain not included - See DRAINS section
• Max flow rate 1.2 GPM
• ADA compliant
• Handle kit

239	Steel Br.	1.482	726	Warm Bronze Br. PVD	2.192
707	Black Metal Br. PVD	2.192	727	Brass Br. PVD	2.192
708	Copper Br. PVD	2.192			

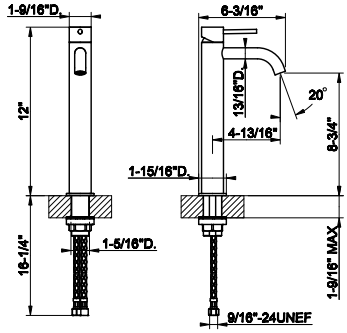



54306

Tall single lever washbasin mixer without pop-up assembly
• Extended spout projection 6-1/8”
• Height 12”
• Drain not included - See DRAINS section
• Max flow rate 1.2 GPM
• ADA compliant
• Handle kit

239	Steel Br.	1.514	726	Warm Bronze Br. PVD	2.242
707	Black Metal Br. PVD	2.242	727	Brass Br. PVD	2.242
708	Copper Br. PVD	2.242			

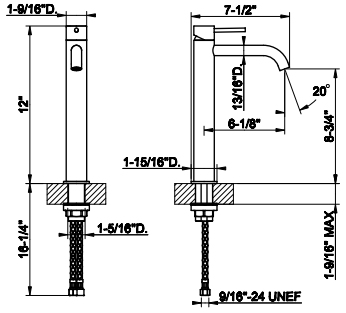



54312

Widespread washbasin mixer without pop-up assembly
• Spout projection 6-1/8”
• Height 8-1/16”
• 1/2” connections
• Drain not included - See DRAINS section
• Max flow rate 1.2 GPM
• ADA compliant
• Handle kit

239	Steel Br.	2.189	726	Warm Bronze Br. PVD	3.239
707	Black Metal Br. PVD	3.239	727	Brass Br. PVD	3.239
708	Copper Br. PVD	3.239			

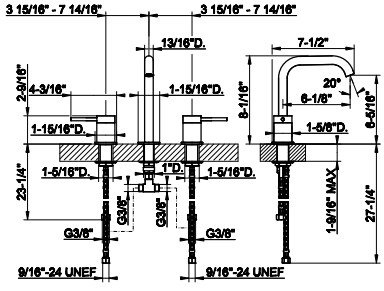

54197+54388

54197

Wall-mounted washbasin mixer rough valve
• Drain not included - See DRAINS section

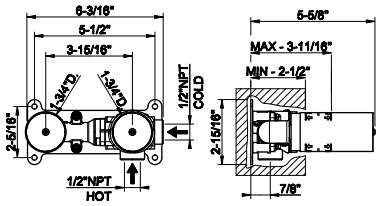



239	Steel Br.	809

54388

TRIM PARTS ONLY Wall-mounted washbasin mixer trim
• Spout projection 5” - 5-3/4”
• Drain not included - See DRAINS section
• Requires in-wall rough valve 54197
• Max flow rate 1.2 GPM
• ADA compliant
• Handle kit

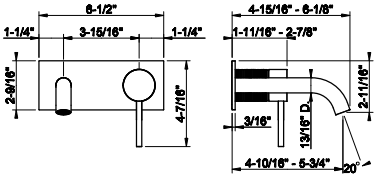



239	Steel Br.	1.263	726	Warm Bronze Br. PVD	1.872
707	Black Metal Br. PVD	1.872	727	Brass Br. PVD	1.872
708	Copper Br. PVD	1.872			

54197+54390

54197

Wall-mounted washbasin mixer rough valve
• Drain not included - See DRAINS section

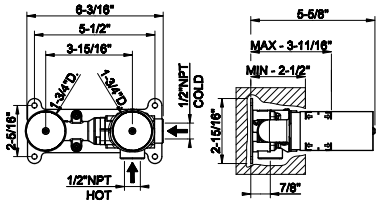



239	Steel Br.	809

54390

TRIM PARTS ONLY Wall-mounted washbasin mixer trim
• Spout projection 7-1/8” - 7-7/8”
• Drain not included - See DRAINS section
• Requires in-wall rough valve 54197
• Max flow rate 1.2 GPM
• ADA compliant
• Handle kit

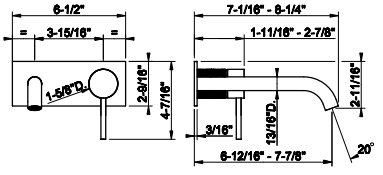



239	Steel Br.	1.291	726	Warm Bronze Br. PVD	1.909
707	Black Metal Br. PVD	1.909	727	Brass Br. PVD	1.909
708	Copper Br. PVD	1.909			

54197

Wall-mounted washbasin mixer rough valve
• Drain not included - See DRAINS section



54197+54383

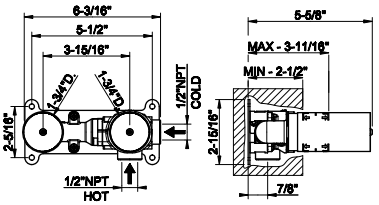

239	Steel Br.	809

54383

TRIM PARTS ONLY Wall-mounted washbasin mixer trim
• Spout projection 5-5/16" - 5-3/4"
• Drain not included - See DRAINS section
•Requires in-wall rough valve 54197
• Max flow rate 1.2 GPM
• ADA compliant
• Handle kit



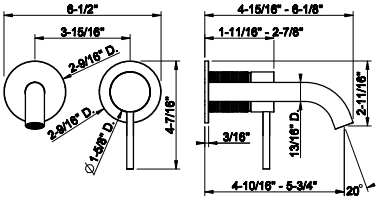

239	Steel Br.	1.103	726	Warm Bronze Br. PVD	1.633
707	Black Metal Br. PVD	1.633	727	Brass Br. PVD	1.633
708	Copper Br. PVD	1.633			

54197

Wall-mounted washbasin mixer rough valve
• Drain not included - See DRAINS section



54197+54386

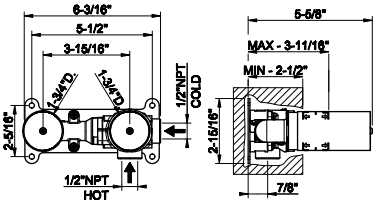

239	Steel Br.	809

54386

TRIM PARTS ONLY Wall-mounted washbasin mixer trim
• Spout projection 7-1/8" - 7-7/8"
• Drain not included - See DRAINS section
• Requires in-wall rough valve 54197
• Max flow rate 1.2 GPM
• ADA compliant
• Handle kit



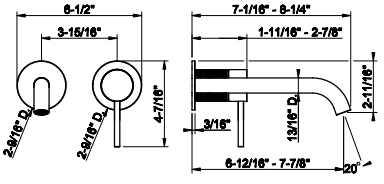

239	Steel Br.	1.132	726	Warm Bronze Br. PVD	1.675
707	Black Metal Br. PVD	1.675	727	Brass Br. PVD	1.675
708	Copper Br. PVD	1.675			

48089+54394

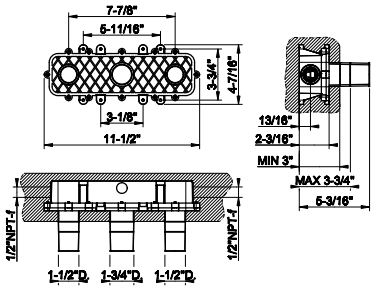

48089

Wall-mounted washbasin mixer rough valve
- Drain not included - See DRAINS section

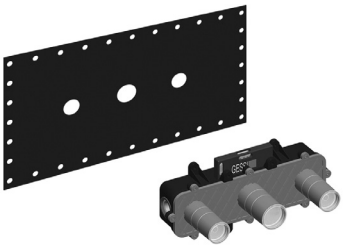

031	Chrome	1.069

54394

TRIM PARTS ONLY Wall-mounted washbasin mixer trim
- Spout projection 7-7/8" - 7-1/8"
- Drain not included - See DRAINS section
- Requires in-wall rough valve 48089
- Max flow rate 1.2 GPM
- ADA compliant
- Handle kit

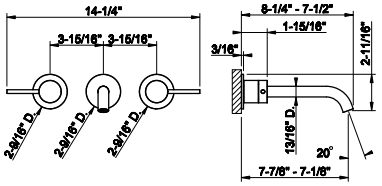



239	Steel Br.	1.676	726	Warm Bronze Br. PVD	2.481
707	Black Metal Br. PVD	2.481	727	Brass Br. PVD	2.481
708	Copper Br. PVD	2.481			

54091

Medium basin spout

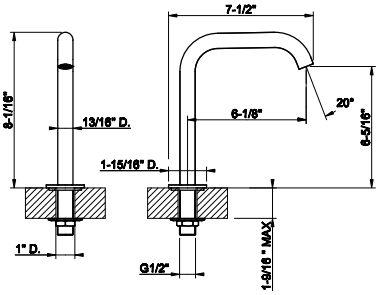



239	Steel Br.	656	708	Copper Br. PVD	968
299	Matte Black	884	726	Warm Bronze Br. PVD	968
707	Black Metal Br. PVD	968	727	Brass Br. PVD	968

54093

High basin spout

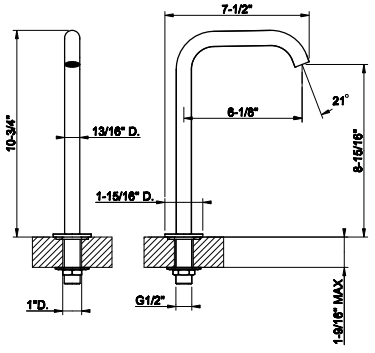



239	Steel Br.	684	708	Copper Br. PVD	1.012
299	Matte Black	923	726	Warm Bronze Br. PVD	1.012
707	Black Metal Br. PVD	1.012	727	Brass Br. PVD	1.012

54010

Medium wall-mounted spout basin



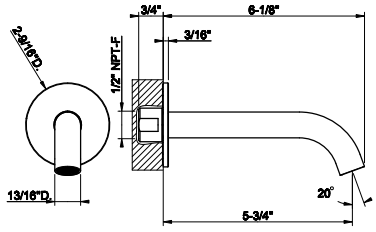

239	Steel Br.	483	708	Copper Br. PVD	713
299	Matte Black	650	726	Warm Bronze Br. PVD	713
707	Black Metal Br. PVD	713	727	Brass Br. PVD	713

54110

Long wall-mounted spout basin



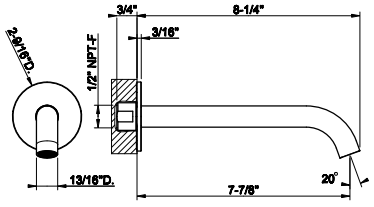

239	Steel Br.	509	708	Copper Br. PVD	750
299	Matte Black	684	726	Warm Bronze Br. PVD	750
707	Black Metal Br. PVD	750	727	Brass Br. PVD	750

54399

Ceiling-mounted washbasin spout only
- Spout length 63”
- Drain not included - See DRAINS section
- Requires mixer control 54319 +53112 or 54305
- Max flow rate 1.2 GPM



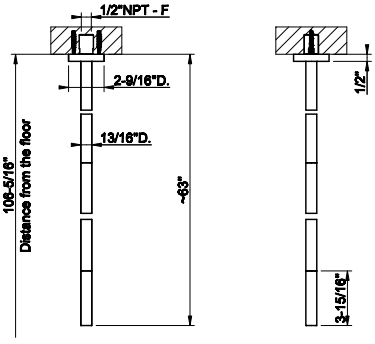

239	Steel Br.	2.660	726	Warm Bronze Br. PVD	3.938
707	Black Metal Br. PVD	3.938	727	Brass Br. PVD	3.938
708	Copper Br. PVD	3.938			

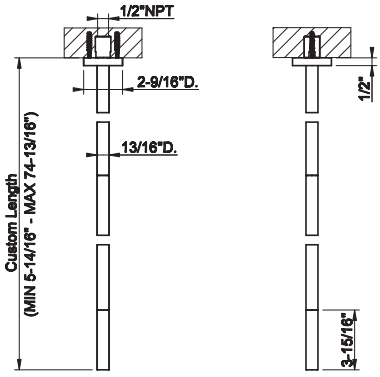

54396

Ceiling-mounted washbasin spout only
- Custom length: Minimum 5-14/16 ” - Maximum 74-13/16”
- Drain not included - See DRAINS section
- Requires mixer control 54319 + 53112 or 54305
- Max flow rate 1.2 GPM



239	Steel Br.	3.511	726	Warm Bronze Br. PVD	5.197
707	Black Metal Br. PVD	5.197	727	Brass Br. PVD	5.197
708	Copper Br. PVD	5.197			

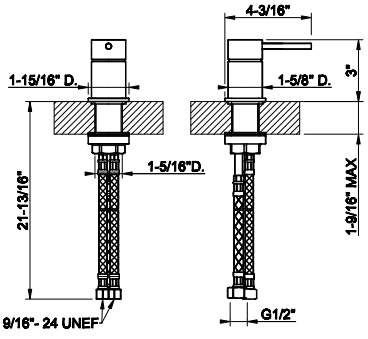

54305

Deck mounted washbasin mixer control
- For spout 54399 or 54396
- 1/2” connections
- Drain not included
- ADA compliant



239	Steel Br.	896	726	Warm Bronze Br. PVD	1.326
707	Black Metal Br. PVD	1.326	727	Brass Br. PVD	1.326
708	Copper Br. PVD	1.326			

53112

Wall-mounted Basin/bath mixer rough valve. One exit



53112+54319

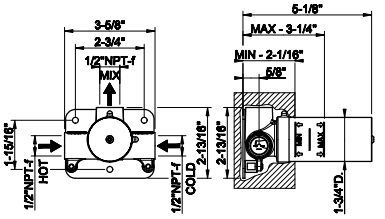

239	Steel Br.	449

54319

TRIM PARTS ONLY Wall-mounted washbasin mixer control
- For spouts 54399 or 54396
- 1/2” connections
- Drain not included - See DRAINS section
- Requires in-wall rough valve 53112
- ADA compliant
- Handle kit



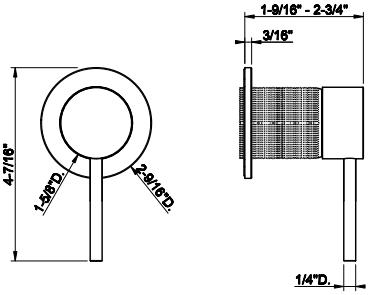

239	Steel Br.	587	726	Warm Bronze Br. PVD	870
707	Black Metal Br. PVD	870	727	Brass Br. PVD	870
708	Copper Br. PVD	870			



GESSI316



54102

Single lever washbasin mixer without pop-up assembly
- Spout projection 4-13/16”
- Height 6-1/4”
- Drain not included - See DRAINSsection
- Max flow rate 1.2 GPM
- ADA compliant
- Handle kit

239	Steel Br.	1.190	708	Copper Br. PVD	1.761
299	Matte Black	1.606	726	Warm Bronze Br. PVD	1.761
707	Black Metal Br. PVD	1.761	727	Brass Br. PVD	1.761

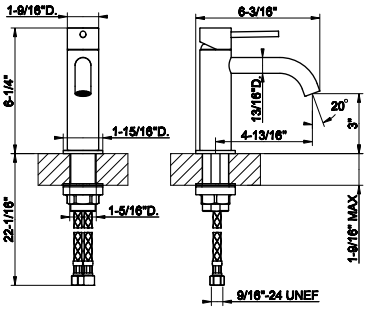



54109

Tall single lever washbasin mixer without pop-up assembly
- Spout projection 4-13/16”
- Height 12”
- Drain not included - See DRAINS section
- Max flow rate 1.2 GPM
- ADA compliant
- Handle kit

239	Steel Br.	1.482	708	Copper Br. PVD	2.192
299	Matte Black	1.998	726	Warm Bronze Br. PVD	2.192
707	Black Metal Br. PVD	2.192	727	Brass Br. PVD	2.192

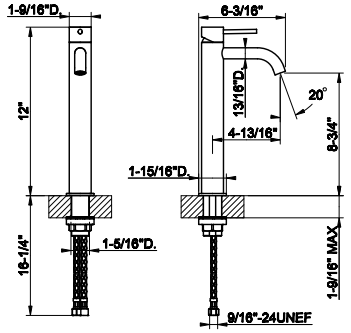



54106

Tall single lever washbasin mixer without pop-up assembly
- Extended spout projection 6-1/8”
- Height 12”
- Drain not included - See DRAINS section
- Max flow rate 1.2 GPM
- ADA compliant
- Handle kit

239	Steel Br.	1.514	708	Copper Br. PVD	2.242
299	Matte Black	2.044	726	Warm Bronze Br. PVD	2.242
707	Black Metal Br. PVD	2.242	727	Brass Br. PVD	2.242

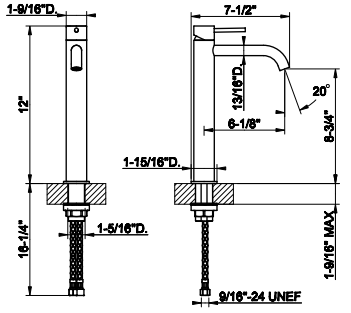



54112

Widespread washbasin mixer without pop-up assembly
- Spout projection 6-1/8”
- Height 8-1/16”
- 1/2” connections
- Drain not included - See DRAINS section
- Max flow rate 1.2 GPM
- ADA compliant
- Handle kit

239	Steel Br.	2.189	708	Copper Br. PVD	3.239
299	Matte Black	2.954	726	Warm Bronze Br. PVD	3.239
707	Black Metal Br. PVD	3.239	727	Brass Br. PVD	3.239

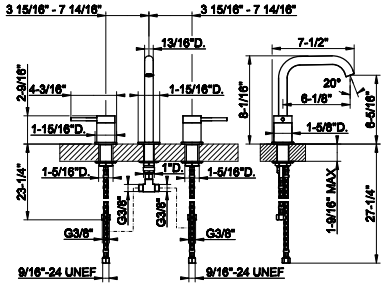

54197+54188

54197

Wall-mounted washbasin mixer rough valve
• Drain not included - See DRAINS section

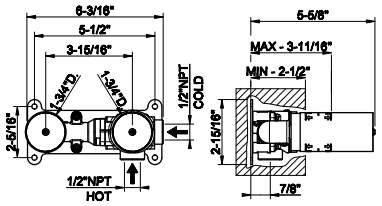



239	Steel Br.	809

54188

TRIM PARTS ONLY Wall-mounted washbasin mixer trim
• Spout projection 5” - 5-3/4”
• Drain not included - See DRAINS section
• Requires in-wall rough valve 54197
• Max flow rate 1.2 GPM
• ADA compliant
• Handle kit

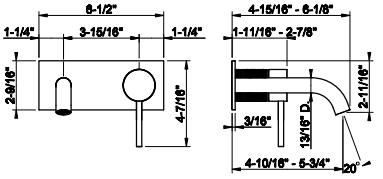



239	Steel Br.	1.263	708	Copper Br. PVD	1.872
299	Matte Black	1.706	726	Warm Bronze Br. PVD	1.872
707	Black Metal Br. PVD	1.872	727	Brass Br. PVD	1.872

54197+54190

54197

Wall-mounted washbasin mixer rough valve
• Drain not included - See DRAINS section

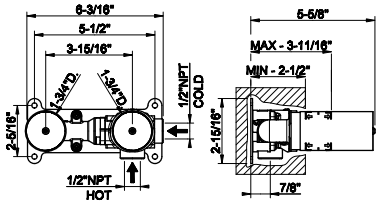



239	Steel Br.	809

54190

TRIM PARTS ONLY Wall-mounted washbasin mixer trim
• Spout projection 7-1/8” - 7-7/8”
• Drain not included - See DRAINS section
• Requires in-wall rough valve 54197
• Max flow rate 1.2 GPM
• ADA compliant
• Handle kit

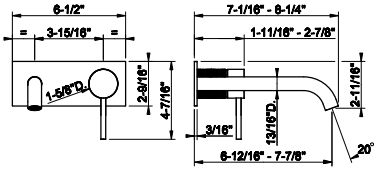



239	Steel Br.	1.291	708	Copper Br. PVD	1.909
299	Matte Black	1.742	726	Warm Bronze Br. PVD	1.909
707	Black Metal Br. PVD	1.909	727	Brass Br. PVD	1.909

54197

Wall-mounted washbasin mixer rough valve
• Drain not included - See DRAINS section



54197+54183

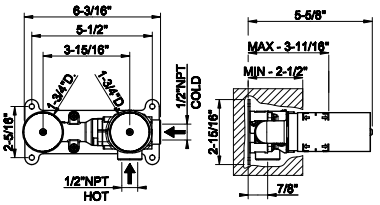

239	Steel Br.	809

54183

TRIM PARTS ONLY Wall-mounted washbasin mixer trim
• Spout projection 5-5/16" - 5-3/4"
• Drain not included - See DRAINS section
• Requires in-wall rough valve 54197
• Max flow rate 1.2 GPM
• ADA compliant
• Handle kit



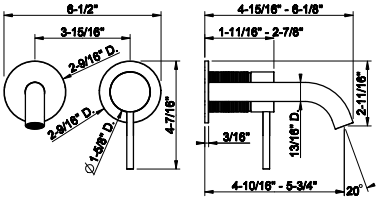

239	Steel Br.	1.103	708	Copper Br. PVD	1.633
299	Matte Black	1.490	726	Warm Bronze Br. PVD	1.633
707	Black Metal Br. PVD	1.633	727	Brass Br. PVD	1.633

54197

Wall-mounted washbasin mixer rough valve
• Drain not included - See DRAINS section



54197+54186

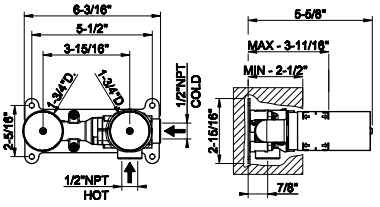

239	Steel Br.	809

54186

TRIM PARTS ONLY Wall-mounted washbasin mixer trim
• Spout projection 7-1/8" - 7-7/8"
• Drain not included - See DRAINS section
• Requires in-wall rough valve 54197
• Max flow rate 1.2 GPM
• ADA compliant
• Handle kit



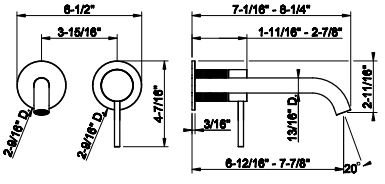

239	Steel Br.	1.132	708	Copper Br. PVD	1.675
299	Matte Black	1.529	726	Warm Bronze Br. PVD	1.675
707	Black Metal Br. PVD	1.675	727	Brass Br. PVD	1.675

48089+54194

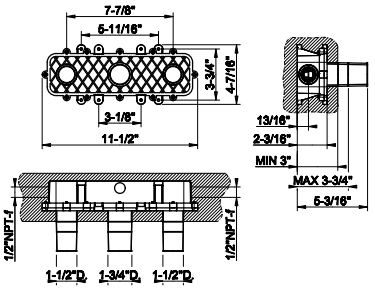

48089

Wall-mounted washbasin mixer rough valve
- Drain not included - See DRAINS section

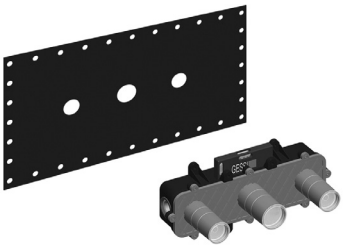

031	Chrome	1.069

54194

TRIM PARTS ONLY Wall-mounted washbasin mixer trim
- Spout projection 7-7/8" - 7-1/8"
- Drain not included - See DRAINS section
- Requires in-wall rough valve 48089
- Max flow rate 1.2 GPM
- ADA compliant
- Handle kit

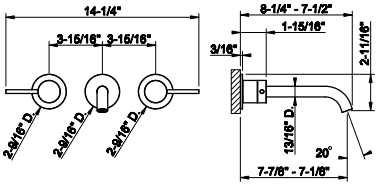



239	Steel Br.	1.676	708	Copper Br. PVD	2.481
299	Matte Black	2.264	726	Warm Bronze Br. PVD	2.481
707	Black Metal Br. PVD	2.481	727	Brass Br. PVD	2.481

54091

Medium basin spout

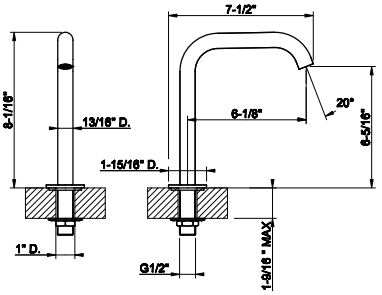



239	Steel Br.	656	708	Copper Br. PVD	968
299	Matte Black	884	726	Warm Bronze Br. PVD	968
707	Black Metal Br. PVD	968	727	Brass Br. PVD	968

54093

High basin spout

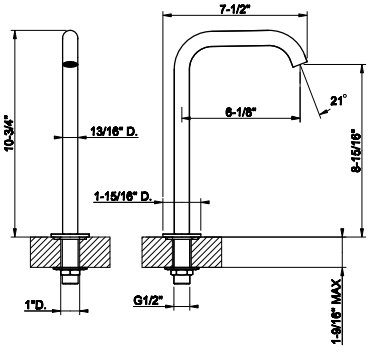



239	Steel Br.	684	708	Copper Br. PVD	1.012
299	Matte Black	923	726	Warm Bronze Br. PVD	1.012
707	Black Metal Br. PVD	1.012	727	Brass Br. PVD	1.012

54010

Medium wall-mounted spout basin



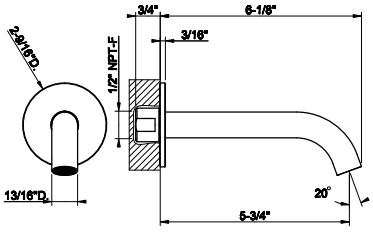

239	Steel Br.	483	708	Copper Br. PVD	713
299	Matte Black	650	726	Warm Bronze Br. PVD	713
707	Black Metal Br. PVD	713	727	Brass Br. PVD	713

54110

Long wall-mounted spout basin



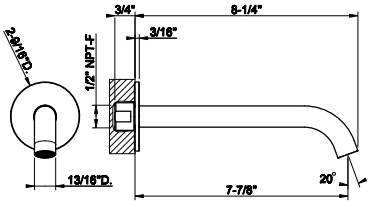

239	Steel Br.	509	708	Copper Br. PVD	750
299	Matte Black	684	726	Warm Bronze Br. PVD	750
707	Black Metal Br. PVD	750	727	Brass Br. PVD	750

54199

Ceiling-mounted washbasin spout only
- Spout length 63”
- Drain not included - See DRAINS section
- Requires mixer control 54119 +53112 or 54105
- Max flow rate 1.2 GPM



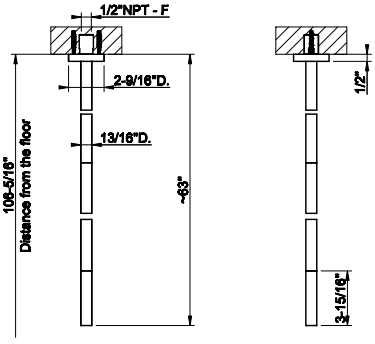

239	Steel Br.	2.660	708	Copper Br. PVD	3.938
299	Matte Black	3.592	726	Warm Bronze Br. PVD	3.938
707	Black Metal Br. PVD	3.938	727	Brass Br. PVD	3.938

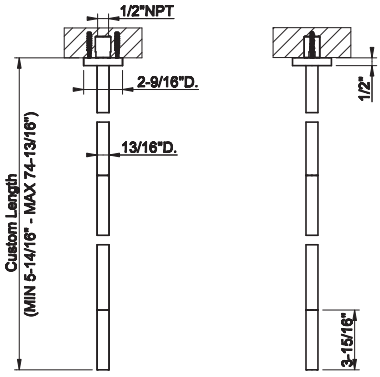

54196

Ceiling-mounted washbasin spout only
- Custom length: Minimum 5-14/16 ” - Maximum 74-13/16”
- Drain not included - See DRAINS section
- Requires mixer control 54119 + 53112 or 54105
- Max flow rate 1.2 GPM



239	Steel Br.	3.511	708	Copper Br. PVD	5.197
299	Matte Black	4.741	726	Warm Bronze Br. PVD	5.197
707	Black Metal Br. PVD	5.197	727	Brass Br. PVD	5.197

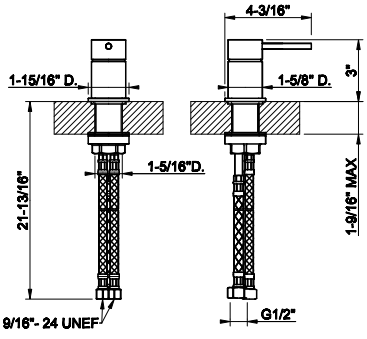

54105

Deck mounted washbasin mixer control
- For spout 54199 or 54196
- 1/2” connections
- Dain not included
- ADA compliant



239	Steel Br.	896	708	Copper Br. PVD	1.326
299	Matte Black	1.210	726	Warm Bronze Br. PVD	1.326
707	Black Metal Br. PVD	1.326	727	Brass Br. PVD	1.326

53112

Wall-mounted Basin/bath mixer rough valve. One exit



53112+54119

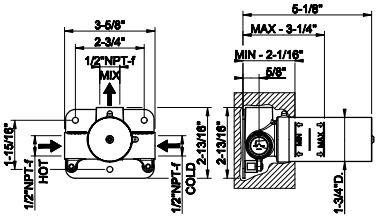

239	Steel Br.	449

54119

TRIM PARTS ONLY Wall-mounted washbasin mixer control
- For spouts 54199 or 54196
- 1/2” connections
- Drain not included - See DRAINS section
- Requires in-wall rough valve 53112
- ADA compliant
- Handle kit



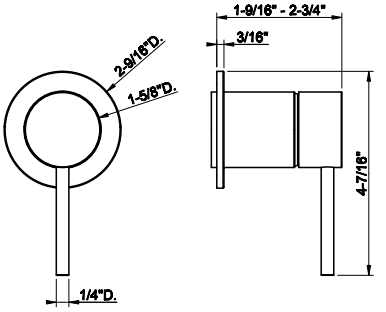

239	Steel Br.	587	708	Copper Br. PVD	870
299	Matte Black	793	726	Warm Bronze Br. PVD	870
707	Black Metal Br. PVD	870	727	Brass Br. PVD	870



GESSI316



54202

Single lever washbasin mixer without pop-up assembly
- Spout projection 4-13/16”
- Height 6-1/4”
- Drain not included - See DRAINSsection
- Max flow rate 1.2 GPM
- ADA compliant
- Handle kit

239	Steel Br.	1.190	708	Copper Br. PVD	1.761
299	Matte Black	1.606	726	Warm Bronze Br. PVD	1.761
707	Black Metal Br. PVD	1.761	727	Brass Br. PVD	1.761

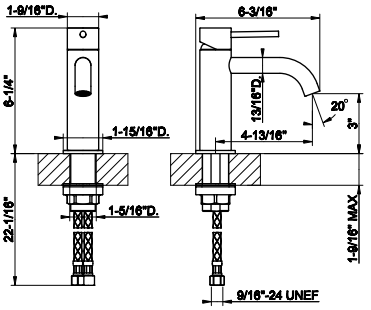



54209

Tall single lever washbasin mixer without pop-up assembly
- Spout projection 4-13/16”
- Height 12”
- Drain not included - See DRAINS section
- Max flow rate 1.2 GPM
- ADA compliant
- Handle kit

239	Steel Br.	1.482	708	Copper Br. PVD	2.192
299	Matte Black	1.998	726	Warm Bronze Br. PVD	2.192
707	Black Metal Br. PVD	2.192	727	Brass Br. PVD	2.192

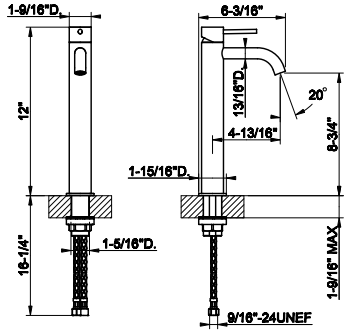



54206

Tall single lever washbasin mixer without pop-up assembly
- Extended spout projection 6-1/8”
- Height 12”
- Drain not included - See DRAINS section
- Max flow rate 1.2 GPM
- ADA compliant
- Handle kit

239	Steel Br.	1.514	708	Copper Br. PVD	2.242
299	Matte Black	2.044	726	Warm Bronze Br. PVD	2.242
707	Black Metal Br. PVD	2.242	727	Brass Br. PVD	2.242

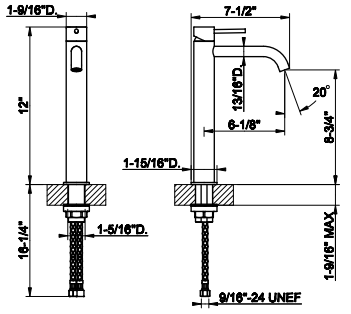



54212

Widespread washbasin mixer without pop-up assembly
- Spout projection 6-1/8”
- Height 8-1/16”
- 1/2” connections
- Drain not included - See DRAINS section
- Max flow rate 1.2 GPM
- ADA compliant
- Handle kit

239	Steel Br.	2.189	708	Copper Br. PVD	3.239
299	Matte Black	2.954	726	Warm Bronze Br. PVD	3.239
707	Black Metal Br. PVD	3.239	727	Brass Br. PVD	3.239

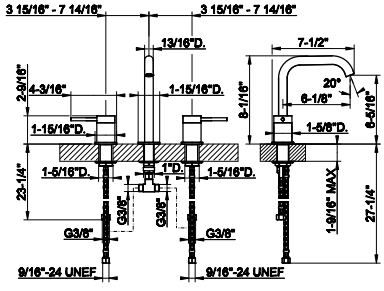

54197+54288

54197

Wall-mounted washbasin mixer rough valve
• Drain not included - See DRAINS section

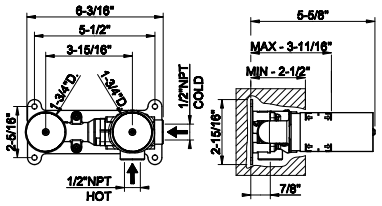



239	Steel Br.	809

54288

TRIM PARTS ONLY Wall-mounted washbasin mixer trim
• Spout projection 5” - 5-3/4”
• Drain not included - See DRAINS section
• Requires in-wall rough valve 54197
• Max flow rate 1.2 GPM
• ADA compliant
• Handle kit

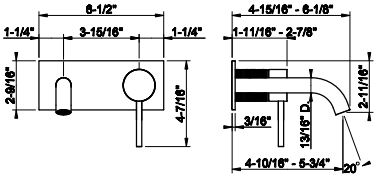



239	Steel Br.	1.263	708	Copper Br. PVD	1.872
299	Matte Black	1.706	726	Warm Bronze Br. PVD	1.872
707	Black Metal Br. PVD	1.872	727	Brass Br. PVD	1.872

54197+54290

54197

Wall-mounted washbasin mixer rough valve
• Drain not included - See DRAINS section

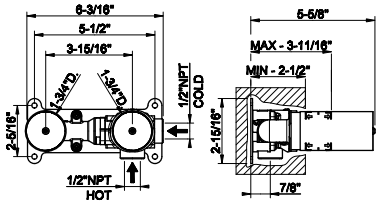



239	Steel Br.	809

54290

TRIM PARTS ONLY Wall-mounted washbasin mixer trim
• Spout projection 7-1/8” - 7-7/8”
• Drain not included - See DRAINS section
• Requires in-wall rough valve 54197
• Max flow rate 1.2 GPM
• ADA compliant
• Handle kit

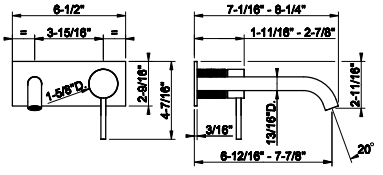



239	Steel Br.	1.291	708	Copper Br. PVD	1.909
299	Matte Black	1.742	726	Warm Bronze Br. PVD	1.909
707	Black Metal Br. PVD	1.909	727	Brass Br. PVD	1.909

54197

Wall-mounted washbasin mixer rough valve
• Drain not included - See DRAINS section



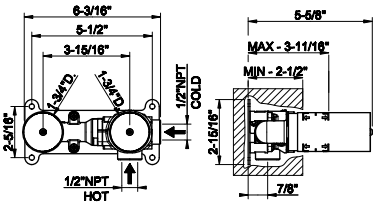

239	Steel Br.	809

54283

TRIM PARTS ONLY Wall-mounted washbasin mixer trim
• Spout projection 5-5/16" - 5-3/4"
• Drain not included - See DRAINS section
•Requires in-wall rough valve 54197
• Max flow rate 1.2 GPM
• ADA compliant
• Handle kit



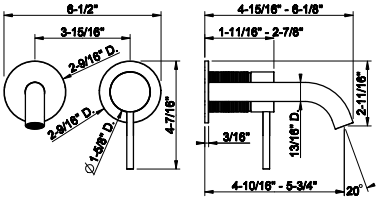

239	Steel Br.	1.103	708	Copper Br. PVD	1.633
299	Matte Black	1.490	726	Warm Bronze Br. PVD	1.633
707	Black Metal Br. PVD	1.633	727	Brass Br. PVD	1.633

54197+54283

54197

Wall-mounted washbasin mixer rough valve
• Drain not included - See DRAINS section



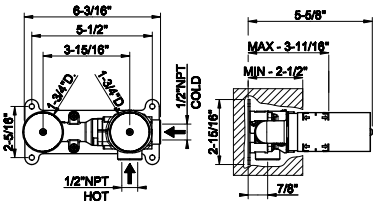

239	Steel Br.	809

54286

TRIM PARTS ONLY Wall-mounted washbasin mixer trim
• Spout projection 7-1/8" - 7-7/8"
• Drain not included - See DRAINS section
• Requires in-wall rough valve 54197
• Max flow rate 1.2 GPM
• ADA compliant
• Handle kit



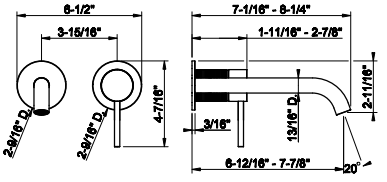

239	Steel Br.	1.132	708	Copper Br. PVD	1.675
299	Matte Black	1.529	726	Warm Bronze Br. PVD	1.675
707	Black Metal Br. PVD	1.675	727	Brass Br. PVD	1.675

54197+54286

48089+54294

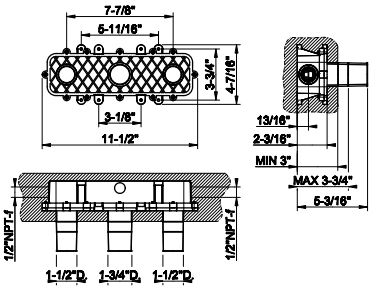

48089

Wall-mounted washbasin mixer rough valve
- Drain not included - See DRAINS section

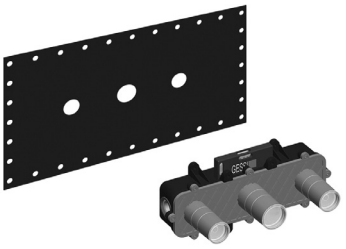

031	Chrome	1.069

54294

TRIM PARTS ONLY Wall-mounted washbasin mixer trim
- Spout projection 7-7/8" - 7-1/8"
- Drain not included - See DRAINS section
- Requires in-wall rough valve 48089
- Max flow rate 1.2 GPM
- ADA compliant
- Handle kit

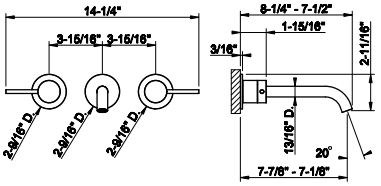



239	Steel Br.	1.676	708	Copper Br. PVD	2.481
299	Matte Black	2.264	726	Warm Bronze Br. PVD	2.481
707	Black Metal Br. PVD	2.481	727	Brass Br. PVD	2.481

54091

Medium basin spout

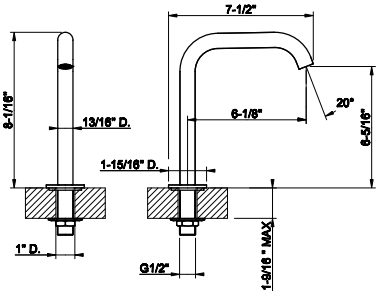



239	Steel Br.	656	708	Copper Br. PVD	968
299	Matte Black	884	726	Warm Bronze Br. PVD	968
707	Black Metal Br. PVD	968	727	Brass Br. PVD	968

54093

High basin spout

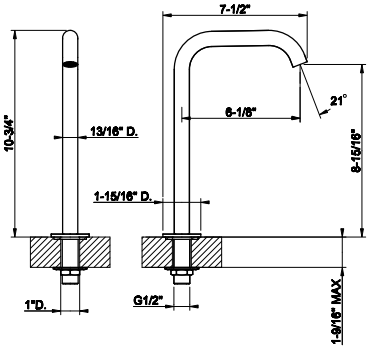



239	Steel Br.	684	708	Copper Br. PVD	1.012
299	Matte Black	923	726	Warm Bronze Br. PVD	1.012
707	Black Metal Br. PVD	1.012	727	Brass Br. PVD	1.012

54010

Medium wall-mounted spout basin



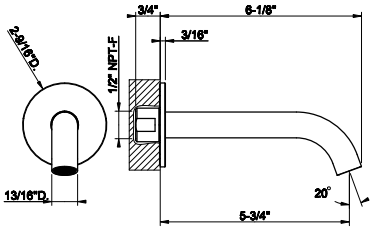

239	Steel Br.	483	708	Copper Br. PVD	713
299	Matte Black	650	726	Warm Bronze Br. PVD	713
707	Black Metal Br. PVD	713	727	Brass Br. PVD	713

54110

Long wall-mounted spout basin



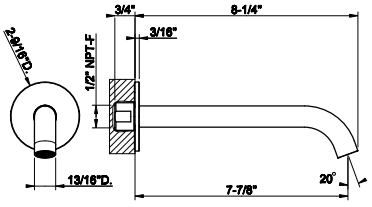

239	Steel Br.	509	708	Copper Br. PVD	750
299	Matte Black	684	726	Warm Bronze Br. PVD	750
707	Black Metal Br. PVD	750	727	Brass Br. PVD	750

54299

Ceiling-mounted washbasin spout only
- Spout length 63”
- Drain not included - See DRAINS section
- Requires mixer control 54219 +53112 or 54205
- Max flow rate 1.2 GPM



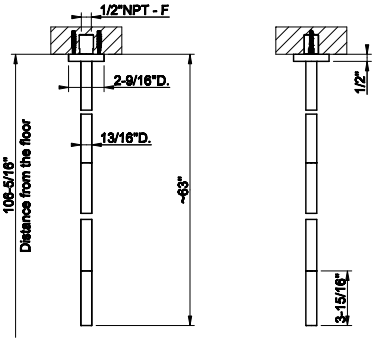

239	Steel Br.	2.660	708	Copper Br. PVD	3.938
299	Matte Black	3.592	726	Warm Bronze Br. PVD	3.938
707	Black Metal Br. PVD	3.938	727	Brass Br. PVD	3.938

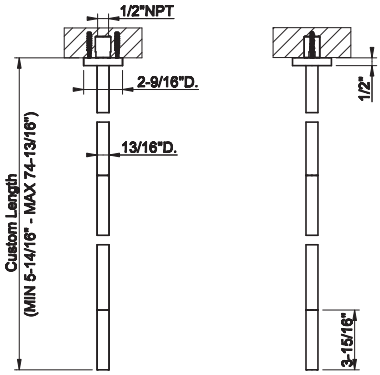

54296

Ceiling-mounted washbasin spout only
- Custom length: Minimum 5-14/16 ” - Maximum 74-13/16”
- Drain not included - See DRAINS section
- Requires mixer control 54219 + 53112 or 54205
- Max flow rate 1.2 GPM



239	Steel Br.	3.511	708	Copper Br. PVD	5.197
299	Matte Black	4.741	726	Warm Bronze Br. PVD	5.197
707	Black Metal Br. PVD	5.197	727	Brass Br. PVD	5.197

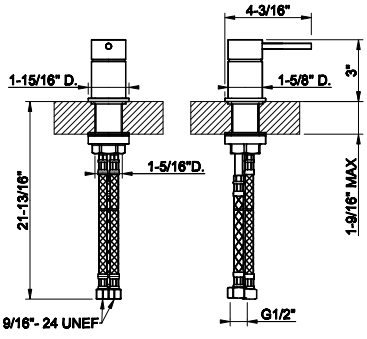

54205

Deck mounted washbasin mixer control
- For spout 54299 or 54296
- 1/2” connections
- Drain not included
- ADA compliant



239	Steel Br.	896	708	Copper Br. PVD	1.326
299	Matte Black	1.210	726	Warm Bronze Br. PVD	1.326
707	Black Metal Br. PVD	1.326	727	Brass Br. PVD	1.326

53112

Wall-mounted Basin/bath mixer rough valve. One exit



53112+54219

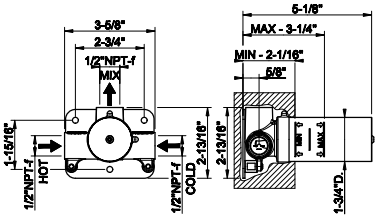

239	Steel Br.	449

54219

TRIM PARTS ONLY Wall-mounted washbasin mixer control
- For spouts 54299 or 54296
- 1/2” connections
- Drain not included - See DRAINS section
- Requires in-wall rough valve 53112
- ADA compliant
- Handle kit



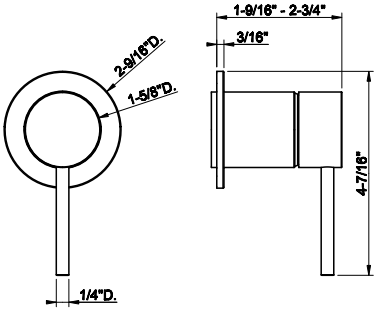

239	Steel Br.	587	708	Copper Br. PVD	870
299	Matte Black	793	726	Warm Bronze Br. PVD	870
707	Black Metal Br. PVD	870	727	Brass Br. PVD	870



GESSI316



54402

Single lever washbasin mixer without pop-up assembly
- Spout projection 4-13/16”
- Height 6-1/4”
- Drain not included - See DRAINSsection
- Max flow rate 1.2 GPM
- ADA compliant
- Handle kit

239	Steel Br.	1.190	708	Copper Br. PVD	1.761
299	Matte Black	1.606	726	Warm Bronze Br. PVD	1.761
707	Black Metal Br. PVD	1.761	727	Brass Br. PVD	1.761

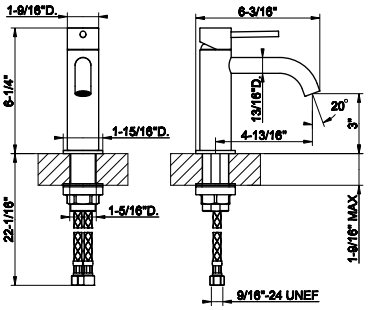



54409

Tall single lever washbasin mixer without pop-up assembly
- Spout projection 4-13/16”
- Height 12”
- Drain not included - See DRAINS section
- Max flow rate 1.2 GPM
- ADA compliant
- Handle kit

239	Steel Br.	1.482	708	Copper Br. PVD	2.192
299	Matte Black	1.998	726	Warm Bronze Br. PVD	2.192
707	Black Metal Br. PVD	2.192	727	Brass Br. PVD	2.192

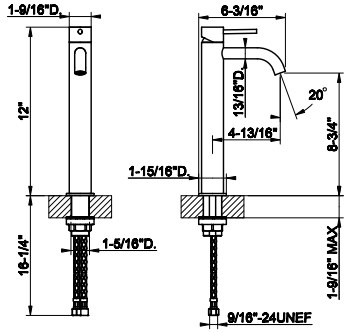



54406

Tall single lever washbasin mixer without pop-up assembly
- Extended spout projection 6-1/8”
- Height 12”
- Drain not included - See DRAINS section
- Max flow rate 1.2 GPM
- ADA compliant
- Handle kit

239	Steel Br.	1.514	708	Copper Br. PVD	2.242
299	Matte Black	2.044	726	Warm Bronze Br. PVD	2.242
707	Black Metal Br. PVD	2.242	727	Brass Br. PVD	2.242

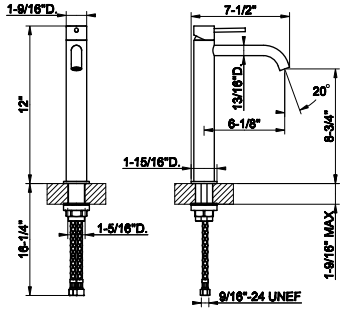



54412

Widespread washbasin mixer without pop-up assembly
- Spout projection 6-1/8”
- Height 8-1/16”
- 1/2” connections
- Drain not included - See DRAINS section
- Max flow rate 1.2 GPM
- ADA compliant
- Handle kit

239	Steel Br.	2.189	708	Copper Br. PVD	3.239
299	Matte Black	2.954	726	Warm Bronze Br. PVD	3.239
707	Black Metal Br. PVD	3.239	727	Brass Br. PVD	3.239

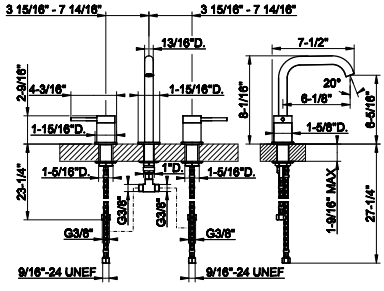

54197+54488

54197

Wall-mounted washbasin mixer rough valve
• Drain not included - See DRAINS section

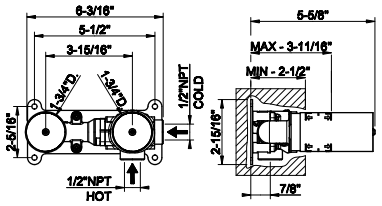



239	Steel Br.	809

54488

TRIM PARTS ONLY Wall-mounted washbasin mixer trim
• Spout projection 5” - 5-3/4”
• Drain not included - See DRAINS section
• Requires in-wall rough valve 54197
• Max flow rate 1.2 GPM
• ADA compliant
• Handle kit

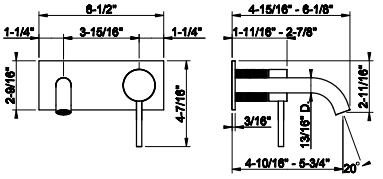



239	Steel Br.	1.263	708	Copper Br. PVD	1.872
299	Matte Black	1.706	726	Warm Bronze Br. PVD	1.872
707	Black Metal Br. PVD	1.872	727	Brass Br. PVD	1.872

54197+54490

54197

Wall-mounted washbasin mixer rough valve
• Drain not included - See DRAINS section

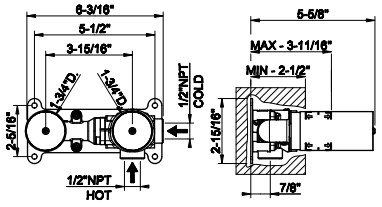



239	Steel Br.	809

54490

TRIM PARTS ONLY Wall-mounted washbasin mixer trim
• Spout projection 7-1/8” - 7-7/8”
• Drain not included - See DRAINS section
• Requires in-wall rough valve 54197
• Max flow rate 1.2 GPM
• ADA compliant
• Handle kit

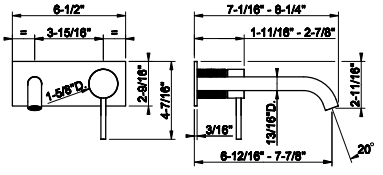



239	Steel Br.	1.291	708	Copper Br. PVD	1.909
299	Matte Black	1.742	726	Warm Bronze Br. PVD	1.909
707	Black Metal Br. PVD	1.909	727	Brass Br. PVD	1.909

54197

Wall-mounted washbasin mixer rough valve
• Drain not included - See DRAINS section



54197+54483

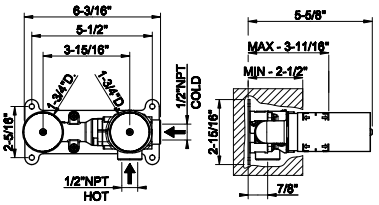

239	Steel Br.	809			

54483

TRIM PARTS ONLY Wall-mounted washbasin mixer trim
• Spout projection 5-5/16" - 5-3/4"
• Drain not included - See DRAINS section
•Requires in-wall rough valve 54197
• Max flow rate 1.2 GPM
• ADA compliant
• Handle kit



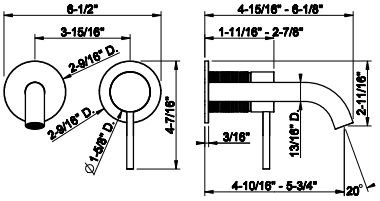

239	Steel Br.	1.103	708	Copper Br. PVD	1.633
299	Matte Black	1.490	726	Warm Bronze Br. PVD	1.633
707	Black Metal Br. PVD	1.633	727	Brass Br. PVD	1.633

54197

Wall-mounted washbasin mixer rough valve
• Drain not included - See DRAINS section



54197+54486

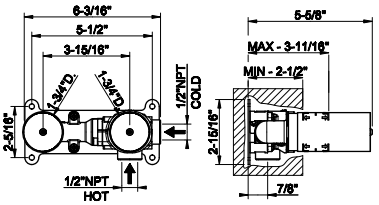

239	Steel Br.	809			

54486

TRIM PARTS ONLY Wall-mounted washbasin mixer trim
• Spout projection 7-1/8" - 7-7/8"
• Drain not included - See DRAINS section
• Requires in-wall rough valve 54197
• Max flow rate 1.2 GPM
• ADA compliant
• Handle kit



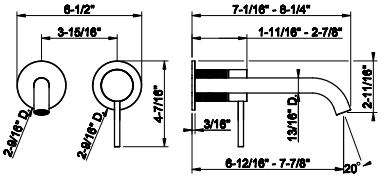

239	Steel Br.	1.132	708	Copper Br. PVD	1.675
299	Matte Black	1.529	726	Warm Bronze Br. PVD	1.675
707	Black Metal Br. PVD	1.675	727	Brass Br. PVD	1.675

48089+54494

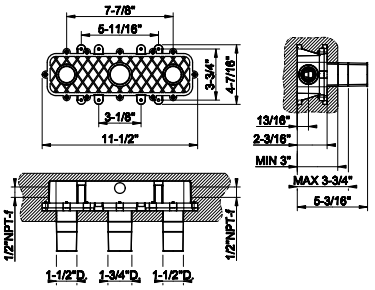

48089

Wall-mounted washbasin mixer rough valve
- Drain not included - See DRAINS section

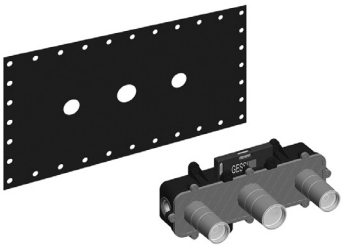

031	Chrome	1.069

54494

TRIM PARTS ONLY Wall-mounted washbasin mixer trim
- Spout projection 7-7/8" - 7-1/8"
- Drain not included - See DRAINS section
- Requires in-wall rough valve 48089
- Max flow rate 1.2 GPM
- ADA compliant
- Handle kit

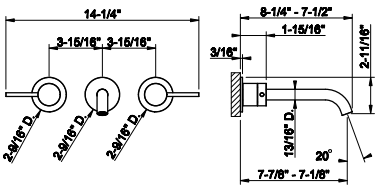



239	Steel Br.	1.676	708	Copper Br. PVD	2.481
299	Matte Black	2.264	726	Warm Bronze Br. PVD	2.481
707	Black Metal Br. PVD	2.481	727	Brass Br. PVD	2.481

54091

Medium basin spout

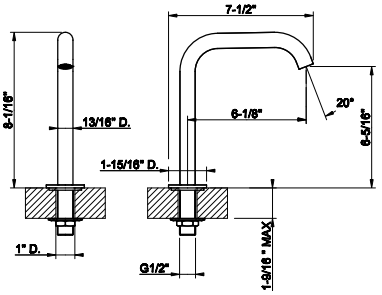



239	Steel Br.	656	708	Copper Br. PVD	968
299	Matte Black	884	726	Warm Bronze Br. PVD	968
707	Black Metal Br. PVD	968	727	Brass Br. PVD	968

54093

High basin spout

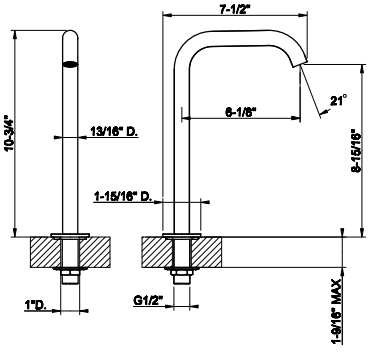



239	Steel Br.	684	708	Copper Br. PVD	1.012
299	Matte Black	923	726	Warm Bronze Br. PVD	1.012
707	Black Metal Br. PVD	1.012	727	Brass Br. PVD	1.012

54010

Medium wall-mounted spout basin



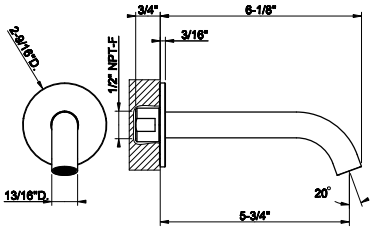

239	Steel Br.	483	708	Copper Br. PVD	713
299	Matte Black	650	726	Warm Bronze Br. PVD	713
707	Black Metal Br. PVD	713	727	Brass Br. PVD	713

54110

Long wall-mounted spout basin



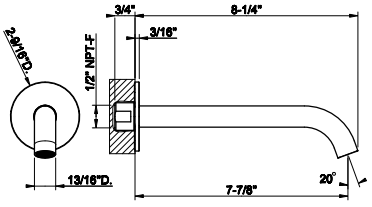

239	Steel Br.	509	708	Copper Br. PVD	750
299	Matte Black	684	726	Warm Bronze Br. PVD	750
707	Black Metal Br. PVD	750	727	Brass Br. PVD	750

54499

Ceiling-mounted washbasin spout only
- Spout length 63”
- Drain not included - See DRAINS section
- Requires mixer control 54419 +53112 or 54405
- Max flow rate 1.2 GPM



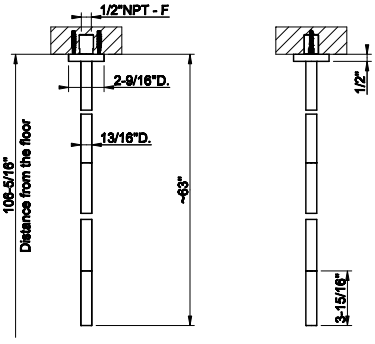

239	Steel Br.	2.660	708	Copper Br. PVD	3.938
299	Matte Black	3.592	726	Warm Bronze Br. PVD	3.938
707	Black Metal Br. PVD	3.938	727	Brass Br. PVD	3.938

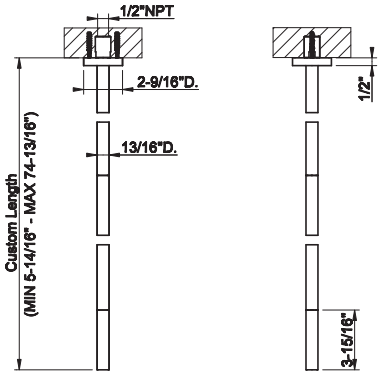

54496

Ceiling-mounted washbasin spout only
- Custom length: Minimum 5-14/16 ” - Maximum 74-13/16”
- Drain not included - See DRAINS section
- Requires mixer control 54419 + 53112 or 54405
- Max flow rate 1.2 GPM



239	Steel Br.	3.511	708	Copper Br. PVD	5.197
299	Matte Black	4.741	726	Warm Bronze Br. PVD	5.197
707	Black Metal Br. PVD	5.197	727	Brass Br. PVD	5.197

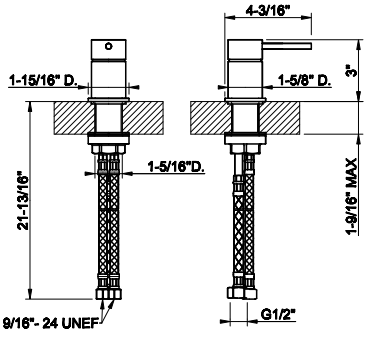

54405

Deck mounted washbasin mixer control
- For spout 54499 or 54496
- 1/2” connections
- Drain not included
- ADA compliant



239	Steel Br.	896	708	Copper Br. PVD	1.326
299	Matte Black	1.210	726	Warm Bronze Br. PVD	1.326
707	Black Metal Br. PVD	1.326	727	Brass Br. PVD	1.326

53112

Wall-mounted Basin/bath mixer rough valve. One exit



53112+54419

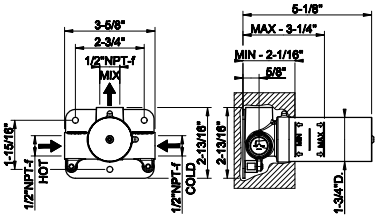

239	Steel Br.	449

54419

TRIM PARTS ONLY Wall-mounted washbasin mixer control
- For spouts 54499 or 54496
- 1/2” connections
- Drain not included - See DRAINS section
- Requires in-wall rough valve 53112
- ADA compliant
- Handle kit



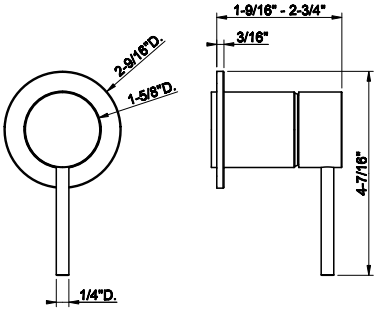

239	Steel Br.	587	708	Copper Br. PVD	870
299	Matte Black	793	726	Warm Bronze Br. PVD	870
707	Black Metal Br. PVD	870	727	Brass Br. PVD	870



GESSI 316

BATH-SHOWER

GESSI316

54043



Three-hole roman tub set
- Diverter
- Hand shower
- 59” flex hose
- Hand shower max flow rate 1.75 GPM

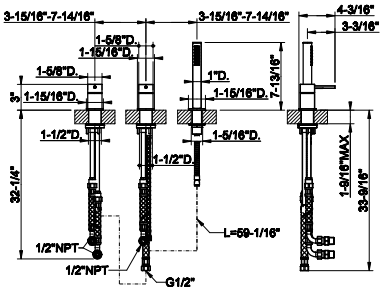

239	Steel Br.	2.264	708	Copper Br. PVD	3.350
299	Matte Black	3.056	726	Warm Bronze Br. PVD	3.350
707	Black Metal Br. PVD	3.350	727	Brass Br. PVD	3.350

54037



Four-hole roman tub set
- Spout - Projection 6-1/2”
- Diverter
- Hand shower
- 59” flex hose
- Hand shower max flow rate 1.75 GPM
- Spout mixed flow rate 5.5 GPM at 60 PSI

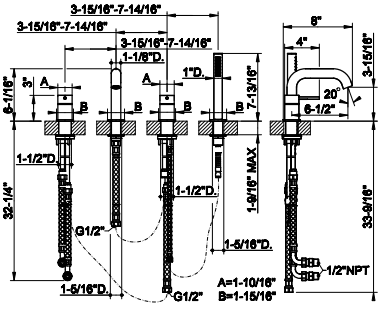

239	Steel Br.	2.903	708	Copper Br. PVD	4.296
299	Matte Black	3.920	726	Warm Bronze Br. PVD	4.296
707	Black Metal Br. PVD	4.296	727	Brass Br. PVD	4.296

48189+54028

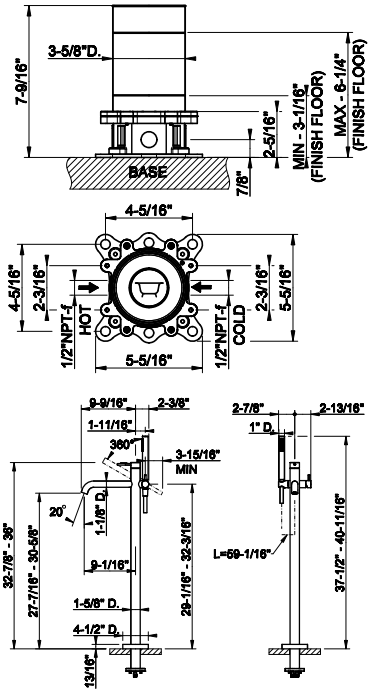

48189

Floor-mounted tub filler in-floor rough valve



031	Chrome	847

54028

TRIM PARTS ONLY Floor-mounted tub filler
- Handshower
- 59” flex hose
- Diverter
- Spout projection 9-1/16”
- Requires in-floor roughvalve 48189
- Handshower max flow rate 1.75 GPM
- Spout mixed flow rate 6 GPM at 60 PSI



239	Steel Br.	3.586	708	Copper Br. PVD	5.308
299	Matte Black	4.842	726	Warm Bronze Br. PVD	5.308
707	Black Metal Br. PVD	5.308	727	Brass Br. PVD	5.308

20293

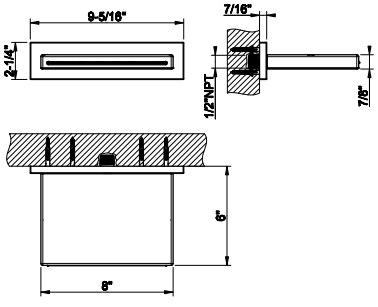

Wall-fixing cascade spout with separate control (not included)
- 1/2” connections
- Projection from the wall 6”
- Flow rate 4.2 GPM at 60 PSI



239	Steel Br.	2.966	726	Warm Bronze Br. PVD	4.687
238	Mirror Steel	2.966	710	Brass PVD	4.390
299	Matte Black	4.006	727	Brass Br. PVD	4.687
720	Nickel PVD	4.390	246	Gold PVD	4.985
706	Black Metal PVD	4.390	716	Gold Br. PVD	4.985
707	Black Metal Br. PVD	4.687	845	Dark Bronze	4.687
030	Copper PVD	4.390	187	Aged Bronze	4.687
708	Copper Br. PVD	4.687	713	Antique Brass	4.687
735	Warm Bronze PVD	4.390	279	Matte White	4.006

54008



Wall-mounted bath spout
- 1/2” connections
- Spout projection 6-3/4”
- Flow rate 5 GPM at 60 PSI
- Requires mixer control

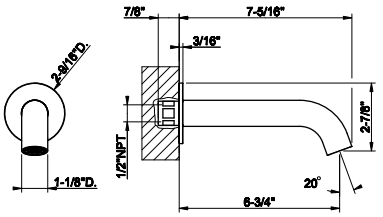

239	Steel Br.	475	708	Copper Br. PVD	703
299	Matte Black	642	726	Warm Bronze Br. PVD	703
707	Black Metal Br. PVD	703	727	Brass Br. PVD	703

54139

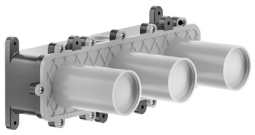

Wall-mounted bath mixer control rough valve
- 1/2” connections
- Non positive shut off

239	Steel Br.	1.087

54139+54038

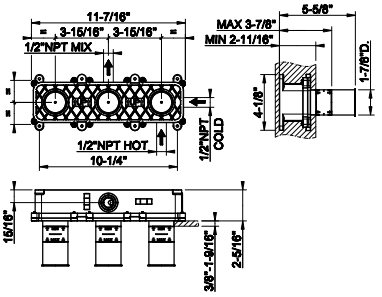

54038



TRIM PARTS ONLY. Wall-mounted bath mixer control
- Single backplate
- Two-way diverter
- Water outlet
- Handshower max flow rate 1.75 GPM
- Requires inline Pressure Balance

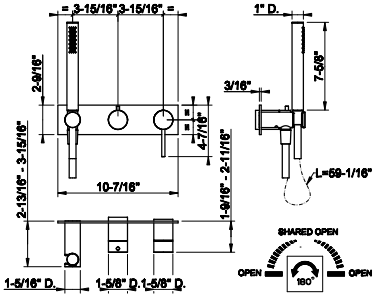

239	Steel Br.	1.746	708	Copper Br. PVD	2.586
299	Matte Black	2.358	726	Warm Bronze Br. PVD	2.586
707	Black Metal Br. PVD	2.586	727	Brass Br. PVD	2.586

54169+54032

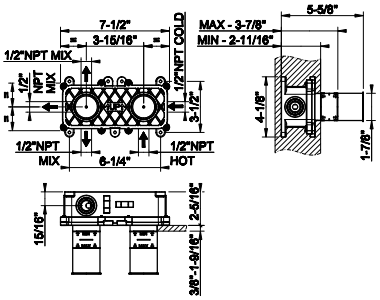

54169

In-wall thermostatic rough valve for 1/2/3-way diverter function
- 1/2” connections
- Anti-scalding
- Service stops not included
- Non-Shared Function

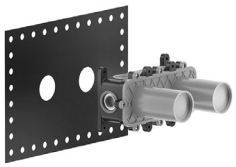

239	Steel Br.	843

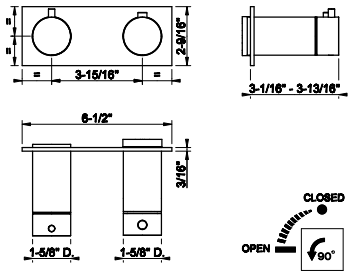

54032

TRIM PARTS ONLY External parts for thermostatic with single volume control
- Single backplate
- 1/2” connections
- Anti-scalding
- Requires in-wall rough valve 54169



239	Steel Br.	1.637	708	Copper Br. PVD	2.422
299	Matte Black	2.208	726	Warm Bronze Br. PVD	2.422
707	Black Metal Br. PVD	2.422	727	Brass Br. PVD	2.422

54169+54232

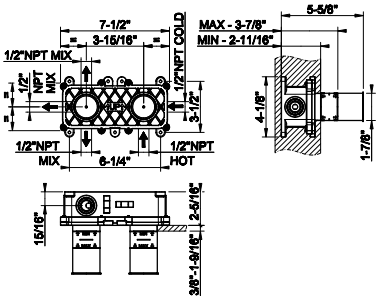

54169

In-wall thermostatic rough valve for 1/2/3-way diverter function
- 1/2” connections
- Anti-scalding
- Service stops not included
- Non-Shared Function

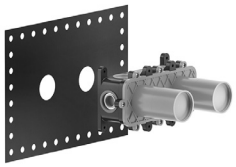

239	Steel Br.	843

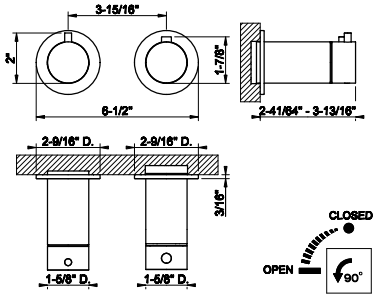

54232

TRIM PARTS ONLY External parts for thermostatic with single volume control
- Separate backplates
- 1/2” connections
- Anti-scalding
- Requires in-wall rough valve 54169



239	Steel Br.	1.621	708	Copper Br. PVD	2.398
299	Matte Black	2.189	726	Warm Bronze Br. PVD	2.398
707	Black Metal Br. PVD	2.398	727	Brass Br. PVD	2.398

54169

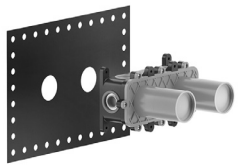

In-wall thermostatic rough valve for 1/2/3-way diverter function
- 1/2” connections
- Anti-scalding
- Service stops not included
- Non-Shared Function

239	Steel Br.	843

54169+54034

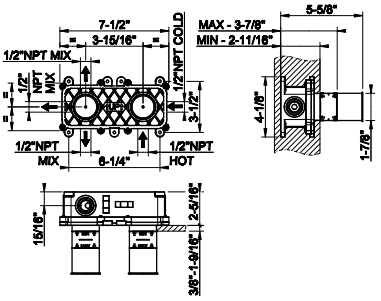

54034



TRIM PARTS ONLY External parts for 2-way diverter thermostatic and volume control
- Single backplate
- 1/2” connections
- Anti-scalding
- Requires in-wall rough valve 54169

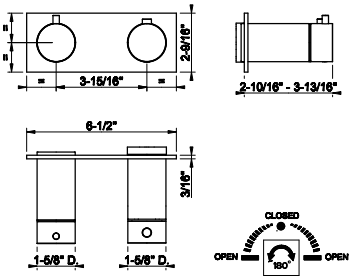

239	Steel Br.	1.637	708	Copper Br. PVD	2.422
299	Matte Black	2.208	726	Warm Bronze Br. PVD	2.422
707	Black Metal Br. PVD	2.422	727	Brass Br. PVD	2.422

54169

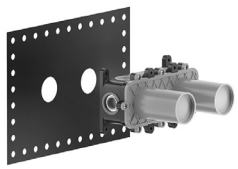

In-wall thermostatic rough valve for 1/2/3-way diverter function
- 1/2” connections
- Anti-scalding
- Service stops not included
- Non-Shared Function

239	Steel Br.	843

54169+54234

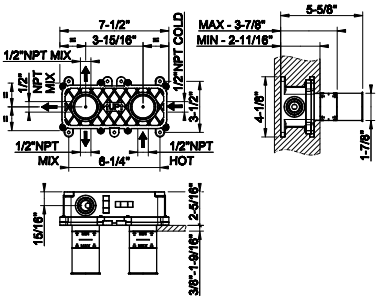

54234



TRIM PARTS ONLY External parts for 2-way diverter thermostatic and volume control
- Separate backplates
- 1/2” connections
- Anti-scalding
- Requires in-wall rough valve 54169

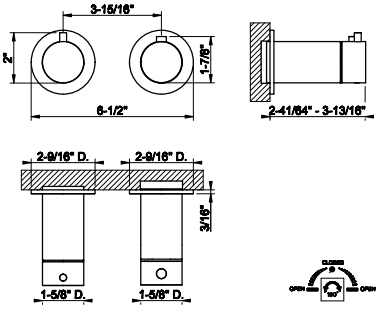

239	Steel Br.	1.621	708	Copper Br. PVD	2.398
299	Matte Black	2.189	726	Warm Bronze Br. PVD	2.398
707	Black Metal Br. PVD	2.398	727	Brass Br. PVD	2.398

54169+54036

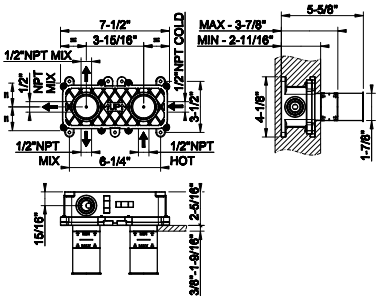

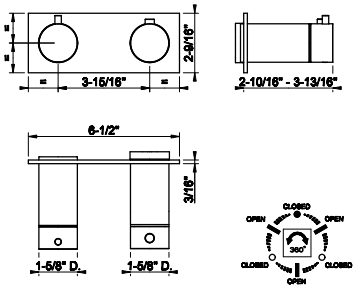

54169

In-wall thermostatic rough valve for 1/2/3-way diverter function
- 1/2” connections
- Anti-scalding
- Service stops not included
- Non-Shared Function

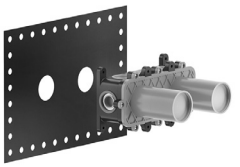

239	Steel Br.	843

54036

TRIM PARTS ONLY External parts for 3-way diverter thermostatic and volume control
- Single backplate
- 1/2” connections
- Anti-scalding
- Requires in-wall rough valve 54169



239	Steel Br.	1.637	708	Copper Br. PVD	2.422
299	Matte Black	2.208	726	Warm Bronze Br. PVD	2.422
707	Black Metal Br. PVD	2.422	727	Brass Br. PVD	2.422

54169+54236

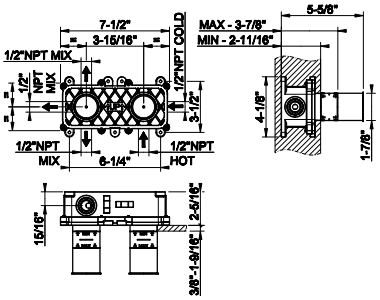

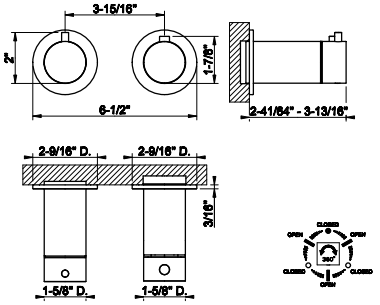

54169

In-wall thermostatic rough valve for 1/2/3-way diverter function
- 1/2” connections
- Anti-scalding
- Service stops not included
- Non-Shared Function

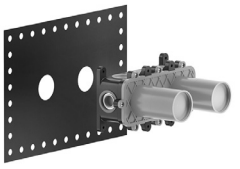

239	Steel Br.	843

54236

TRIM PARTS ONLY External parts for 3-way diverter thermostatic and volume control
- Separate backplates
- 1/2” connections
- Anti-scalding
- Requires in-wall rough valve 54169



239	Steel Br.	1.621	708	Copper Br. PVD	2.398
299	Matte Black	2.189	726	Warm Bronze Br. PVD	2.398
707	Black Metal Br. PVD	2.398	727	Brass Br. PVD	2.398

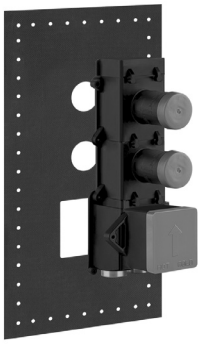

39693

In-wall thermostatic rough valve with 2 volume controls
- High capacity
- 3/4” connections
- Vertical/Horizontal application
- Anti-scalding

031	Chrome	1.903

39693+54514

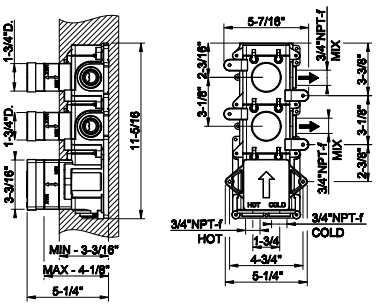



54514

TRIM PARTS ONLY External parts for thermostatic with 2volume controls
- Single backplate
- High capacity
- 3/4” connections
- Vertical/Horizontal application
- Anti-scalding
- Requires in-wall rough valve 39693

239	Steel Br.	1.678	708	Copper Br. PVD	2.484
299	Matte Black	2.267	726	Warm Bronze Br. PVD	2.484
707	Black Metal Br. PVD	2.484	727	Brass Br. PVD	2.484

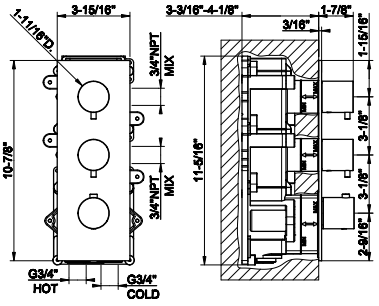

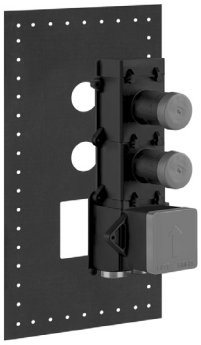

39693

In-wall thermostatic rough valve with 2 volume controls
- High capacity
- 3/4” connections
- Vertical/Horizontal application
- Anti-scalding

031	Chrome	1.903

39693+54504

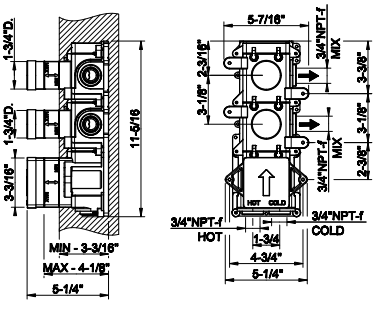



54504

TRIM PARTS ONLY External parts for thermostatic with 2volume controls
- Separate backplates
- High capacity
- 3/4” connections
- Vertical/Horizontal application
- Anti-scalding
- Requires in-wall rough valve 39693

239	Steel Br.	1.678	708	Copper Br. PVD	2.484
299	Matte Black	2.267	726	Warm Bronze Br. PVD	2.484
707	Black Metal Br. PVD	2.484	727	Brass Br. PVD	2.484

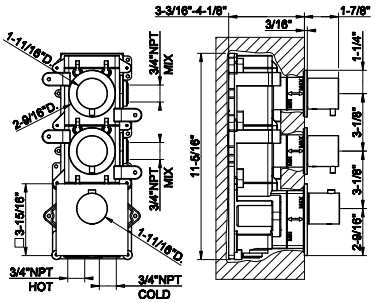

39695+54516

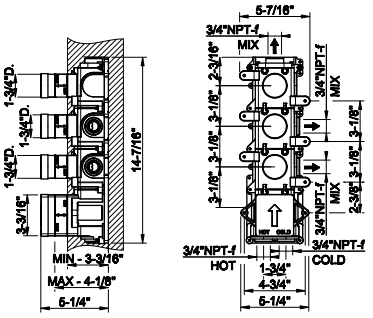

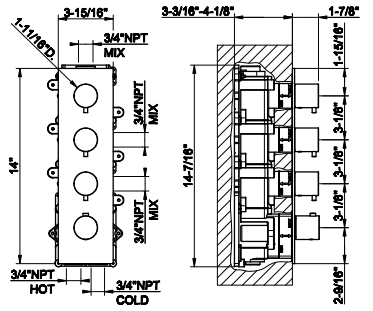

39695

In-wall thermostatic rough valve with 3 volume controls
- High capacity
- 3/4" connections
- Vertical/Horizontal application
- Anti-scalding

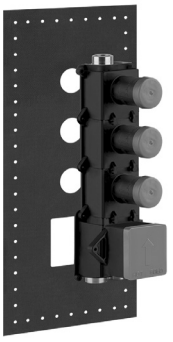

031	Chrome	2.197

54516

TRIM PARTS ONLY External parts for thermostatic with 3volume controls
- Single backplate
- High capacity
- 3/4" connections
- Vertical/Horizontal application
- Anti-scalding
- Requires in-wall rough valve 39695



239	Steel Br.	2.060	708	Copper Br. PVD	3.049
299	Matte Black	2.781	726	Warm Bronze Br. PVD	3.049
707	Black Metal Br. PVD	3.049	727	Brass Br. PVD	3.049

39695+54506

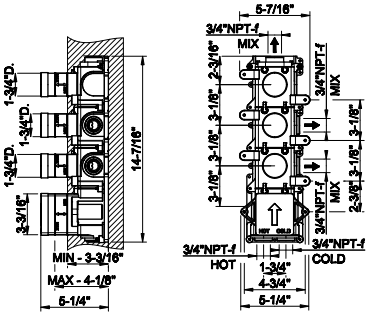

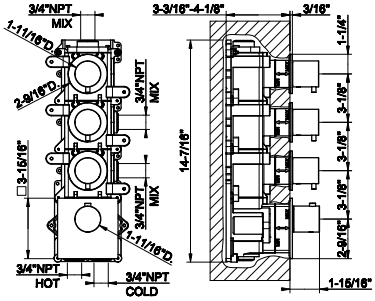

39695

In-wall thermostatic rough valve with 3 volume controls
- High capacity
- 3/4" connections
- Vertical/Horizontal application
- Anti-scalding

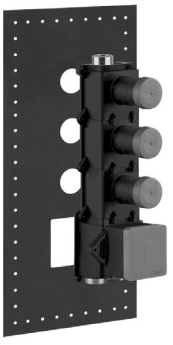

031	Chrome	2.197

54506

TRIM PARTS ONLY External parts for thermostatic with 3volume controls
- Separate backplates
- High capacity
- 3/4" connections
- Vertical/Horizontal application
- Anti-scalding
- Requires in-wall rough valve 39695



239	Steel Br.	2.060	708	Copper Br. PVD	3.049
299	Matte Black	2.781	726	Warm Bronze Br. PVD	3.049
707	Black Metal Br. PVD	3.049	727	Brass Br. PVD	3.049

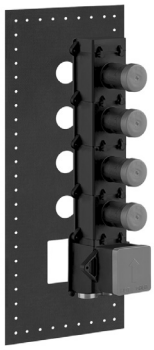

39699

In-wall thermostatic rough valve with 4 volume controls
- High capacity
- 3/4” connections
- Vertical/Horizontal application
- Anti-scalding
- Max flow rate 1.75 GPM

031	Chrome	2.498

39699+54518

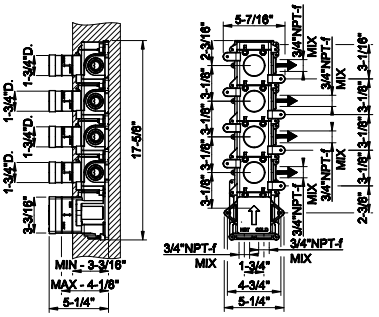



54518

TRIM PARTS ONLY External parts for thermostatic with 4volume controls
- Single backplate
- High capacity
- 3/4” connections
- Vertical/Horizontal application
- Anti-scalding
- Requires in-wall rough valve 39699

239	Steel Br.	2.445	708	Copper Br. PVD	3.618
299	Matte Black	3.301	726	Warm Bronze Br. PVD	3.618
707	Black Metal Br. PVD	3.618	727	Brass Br. PVD	3.618

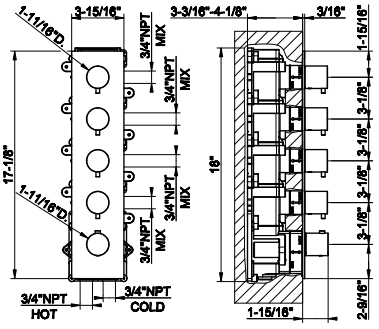

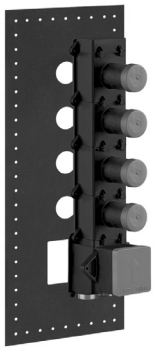

39699

In-wall thermostatic rough valve with 4 volume controls
- High capacity
- 3/4” connections
- Vertical/Horizontal application
- Anti-scalding
- Max flow rate 1.75 GPM

031	Chrome	2.498

39699+54508

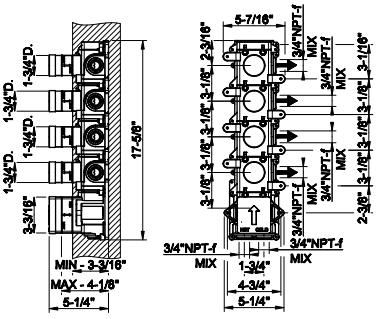



54508

TRIM PARTS ONLY External parts for thermostatic with 4volume controls
- Separate backplates
- High capacity
- 3/4” connections
- Vertical/Horizontal application
- Anti-scalding
- Requires in-wall rough valve 39699

239	Steel Br.	2.445	708	Copper Br. PVD	3.618
299	Matte Black	3.301	726	Warm Bronze Br. PVD	3.618
707	Black Metal Br. PVD	3.618	727	Brass Br. PVD	3.618

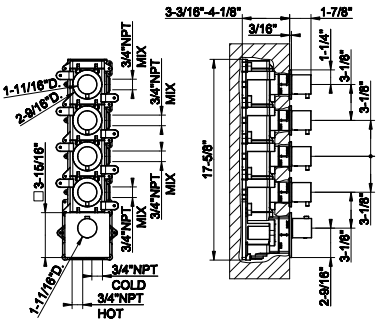

39681+54554

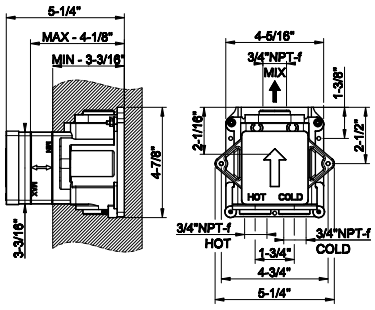

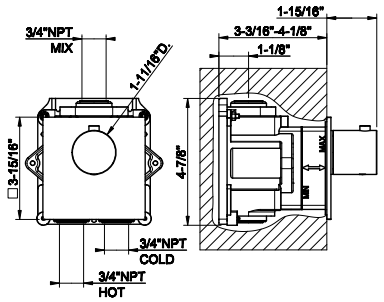

39681

In-wall thermostatic rough valve for individual mixer
- High capacity
- 3/4" connections
- Vertical/Horizontal application
- Anti-scalding

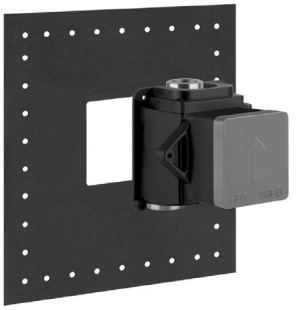

031	Chrome	1.169

54554

TRIM PARTS ONLY External parts for individual thermostaticmixer
- High capacity
- 3/4" connections
- Vertical/Horizontal application
- Anti-scalding
- Requires in-wall rough valve 39681TRIM PARTS ONLY External parts for individual thermostatic mixer



239	Steel Br.	901	708	Copper Br. PVD	1.331
299	Matte Black	1.216	726	Warm Bronze Br. PVD	1.331
707	Black Metal Br. PVD	1.331	727	Brass Br. PVD	1.331

39683+54564

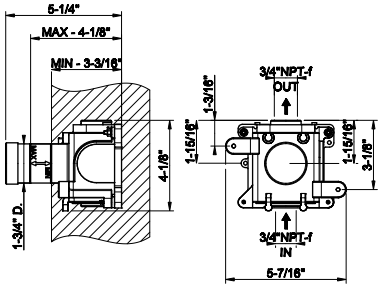

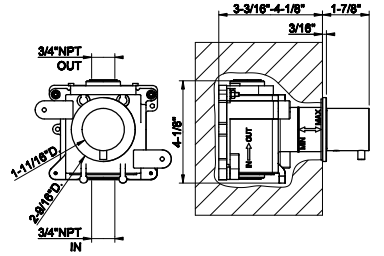

39683

In-wall thermostatic rough valve parts for volume control
- High capacity
- 3/4" connections
- Vertical/Horizontal application
- Anti-scalding

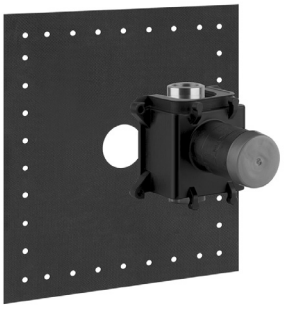

031	Chrome	582

54564

TRIM PARTS ONLY External parts for individual thermostaticvolume control
- High capacity
- 3/4" connections
- Vertical/Horizontal application
- Anti-scalding
- Requires in-wall rough valve 39683



239	Steel Br.	525	708	Copper Br. PVD	777
299	Matte Black	709	726	Warm Bronze Br. PVD	777
707	Black Metal Br. PVD	777	727	Brass Br. PVD	777

54148



Wall-mounted adjustable shower head with arm
- 1/2” connections
- Projection from wall to center 17-11/16”
- Total projection 24-11/16”
- Max flow rate 1.75 GPM

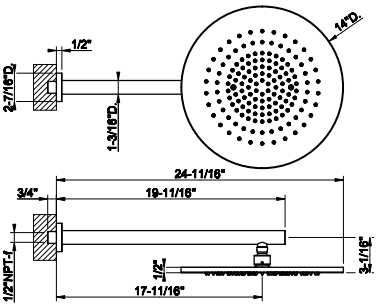

239	Steel Br.	3.586	708	Copper Br. PVD	5.308
299	Matte Black	4.842	726	Warm Bronze Br. PVD	5.308
707	Black Metal Br. PVD	5.308	727	Brass Br. PVD	5.308

54152



Ceiling-mounted adjustable shower head with arm
- 1/2” connections
- Projection from ceiling 10-3/4”
- Max flow rate 1.75 GPM

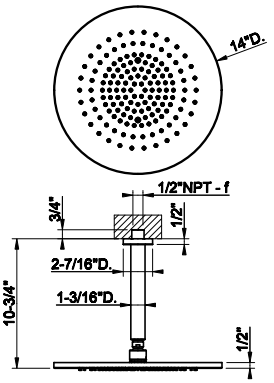

239	Steel Br.	3.151	708	Copper Br. PVD	4.665
299	Matte Black	4.255	726	Warm Bronze Br. PVD	4.665
707	Black Metal Br. PVD	4.665	727	Brass Br. PVD	4.665

57201



Wall-mounted adjustable showerhead FLESSA.
- Multi-spray function
- 1/2” connections
- Projection from the wall 7-1/16”
- Max flow rate 1.75 GPM

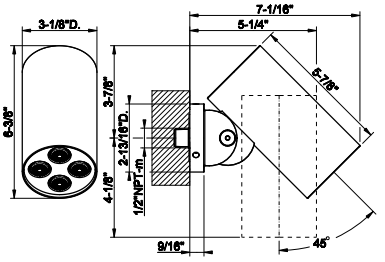

239	Steel Br.	2.006	708	Copper Br. PVD	2.967
299	Matte Black	2.708	726	Warm Bronze Br. PVD	2.967
707	Black Metal Br. PVD	2.967	727	Brass Br. PVD	2.967

57203



Wall-mounted adjustable showerhead FLESSA.
- Rain function
- 1/2” connections
- Projection from the wall 7-1/16”
- Max flow rate 1.75 GPM

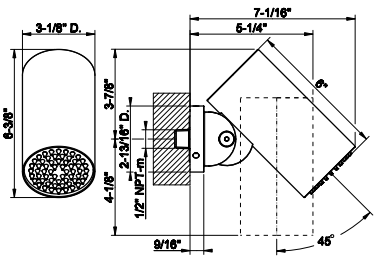

239	Steel Br.	2.006	708	Copper Br. PVD	2.967
299	Matte Black	2.708	726	Warm Bronze Br. PVD	2.967
707	Black Metal Br. PVD	2.967	727	Brass Br. PVD	2.967

57205

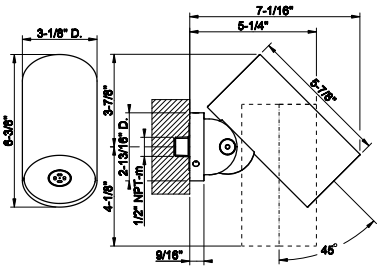

Wall-mounted adjustable showerhead FLESSA.
- Mist function
- 1/2” connections
- Projection from the wall 7-1/16”
- Flow rate 0.14 GPM at 60 PSI



239	Steel Br.	1.919	708	Copper Br. PVD	2.841
299	Matte Black	2.590	726	Warm Bronze Br. PVD	2.841
707	Black Metal Br. PVD	2.841	727	Brass Br. PVD	2.841

57207

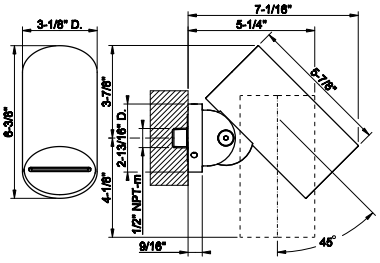

Wall-mounted adjustable showerhead FLESSA.
- Waterfall function
- 1/2” connections
- Projection from the wall 7-1/16”
- Max flow rate 1.75 GPM



239	Steel Br.	2.231	708	Copper Br. PVD	3.302
299	Matte Black	3.013	726	Warm Bronze Br. PVD	3.302
707	Black Metal Br. PVD	3.302	727	Brass Br. PVD	3.302

57249

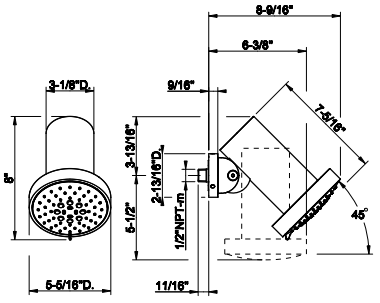

Wall-mounted adjustable shower head FLESSA. RAINFALL/ SPRAY/MASSAGE function.
- 1/2” connections
- Projection from the wall 6-9/16”
- Max flow rate 1.75 GPM



239	Steel Br.	2.405	708	Copper Br. PVD	3.560
299	Matte Black	3.247	726	Warm Bronze Br. PVD	3.560
707	Black Metal Br. PVD	3.560	727	Brass Br. PVD	3.560

57241

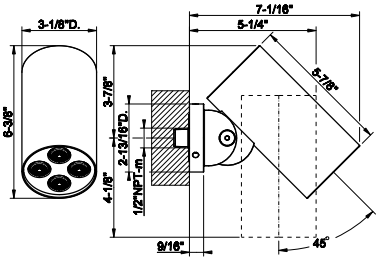

Wall-mounted adjustable showerhead TRAME.
- Multi-spray function
- 1/2” connections
- Projection from the wall 7-1/16”
- Max flow rate 1.75 GPM



239	Steel Br.	2.499	726	Warm Bronze Br. PVD	3.699
707	Black Metal Br. PVD	3.699	727	Brass Br. PVD	3.699
708	Copper Br. PVD	3.699			

57243



Wall-mounted adjustable showerhead TRAME
- Rain function
- 1/2” connections
- Projection from the wall 7-1/16”
- Max flow rate 1.75GPM

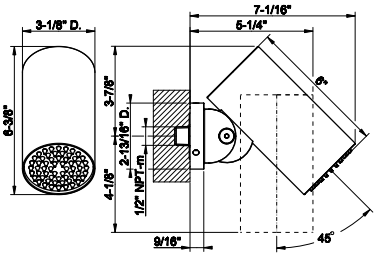

239	Steel Br.	2.499	726	Warm Bronze Br. PVD	3.699
707	Black Metal Br. PVD	3.699	727	Brass Br. PVD	3.699
708	Copper Br. PVD	3.699			

57245



Wall-mounted adjustable showerhead TRAME.
- Mist function
- 1/2” connections
- Projection from the wall 7-1/16”
- Flow rate 0.14 GPM at 60 PSI

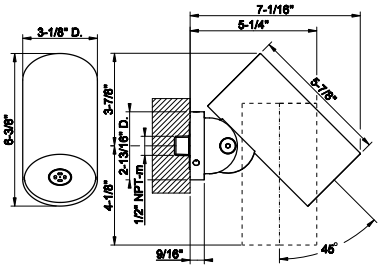

239	Steel Br.	2.463	726	Warm Bronze Br. PVD	3.644
707	Black Metal Br. PVD	3.644	727	Brass Br. PVD	3.644
708	Copper Br. PVD	3.644			

57247



Wall-mounted adjustable showerhead TRAME.
- Waterfall function
- 1/2” connections
- Projection from the wall 7-1/16”
- Max flow rate 1.75 GPM

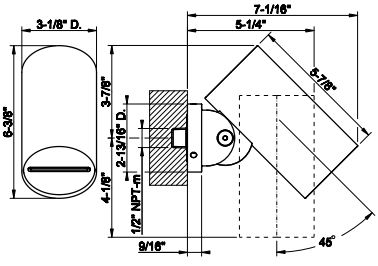

239	Steel Br.	2.727	726	Warm Bronze Br. PVD	4.036
707	Black Metal Br. PVD	4.036	727	Brass Br. PVD	4.036
708	Copper Br. PVD	4.036			

57257



Wall-mounted adjustable showerhead TRAME.
- Rain, Spray, Massage function
- 1/2” connections
- Projection from the wall 7-1/16”
- Max flow rate 1.75 GPM

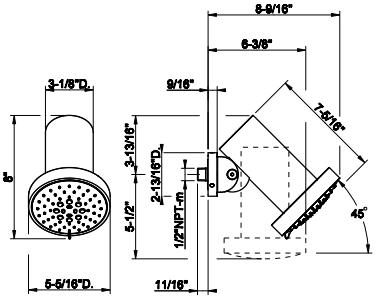

239	Steel Br.	2.910	726	Warm Bronze Br. PVD	4.306
707	Black Metal Br. PVD	4.306	727	Brass Br. PVD	4.306
708	Copper Br. PVD	4.306			

57211

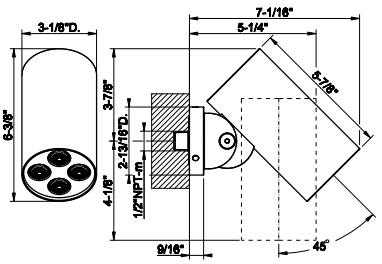

Wall-mounted adjustable showerhead INTRECCIO.
- Multi-spray function
- 1/2” connections
- Projection from the wall 7-1/16”
- Max flow rate 1.75 GPM



239	Steel Br.	2.499	708	Copper Br. PVD	3.699
299	Matte Black	3.375	726	Warm Bronze Br. PVD	3.699
707	Black Metal Br. PVD	3.699	727	Brass Br. PVD	3.699

57213

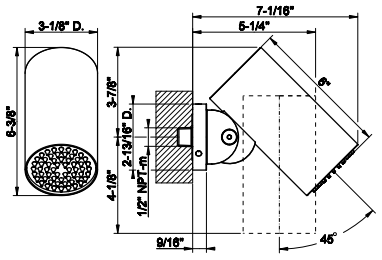

Wall-mounted adjustable showerhead INTRECCIO.
- Rain function
- 1/2” connections
- Projection from the wall 7-1/16”
- Max flow rate1.75 GPM



239	Steel Br.	2.499	708	Copper Br. PVD	3.699
299	Matte Black	3.375	726	Warm Bronze Br. PVD	3.699
707	Black Metal Br. PVD	3.699	727	Brass Br. PVD	3.699

57215

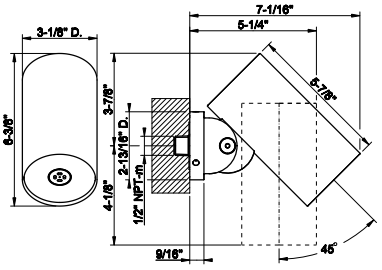

Wall-mounted adjustable showerhead INTRECCIO.
- Mist function
- 1/2” connections
- Projection from the wall 7-1/16”
- Flow rate 0.14 GPM at 60 PSI



239	Steel Br.	2.463	708	Copper Br. PVD	3.644
299	Matte Black	3.327	726	Warm Bronze Br. PVD	3.644
707	Black Metal Br. PVD	3.644	727	Brass Br. PVD	3.644

57217

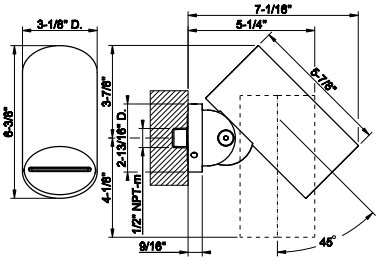

Wall-mounted adjustable showerhead INTRECCIO.
- Waterfall function
- 1/2” connections
- Projection from the wall 7-1/16”
- Max flowrate 1.75 GPM



239	Steel Br.	2.727	708	Copper Br. PVD	4.036
299	Matte Black	3.683	726	Warm Bronze Br. PVD	4.036
707	Black Metal Br. PVD	4.036	727	Brass Br. PVD	4.036

57251



Wall-mounted adjustable showerhead INTRECCIO.
- Rain, Spray, Massage function
- 1/2” connections
- Projection from the wall 7-1/16”
- Max flow rate 1.75 GPM

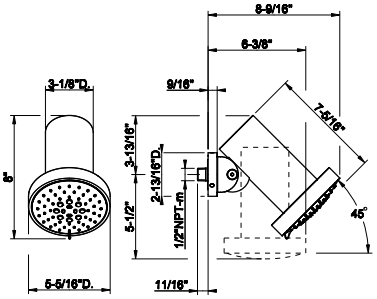

239	Steel Br.	2.910	708	Copper Br. PVD	4.306
299	Matte Black	3.929	726	Warm Bronze Br. PVD	4.306
707	Black Metal Br. PVD	4.306	727	Brass Br. PVD	4.306

57221



Wall-mounted adjustable showerhead MECCANICA.
- Multi-spray function
- 1/2” connections
- Projection from the wall 7-1/16”
- Max flow rate 1.75 GPM

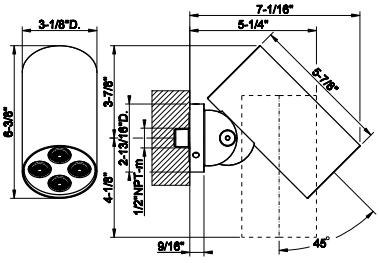

239	Steel Br.	2.499	708	Copper Br. PVD	3.699
299	Matte Black	3.375	726	Warm Bronze Br. PVD	3.699
707	Black Metal Br. PVD	3.699	727	Brass Br. PVD	3.699

57223



Wall-mounted adjustable showerhead MECCANICA.
- Rain function
- 1/2” connections
- Projection from the wall 7-1/16”
- Max flow rate1.75 GPM

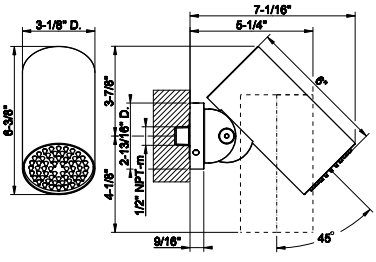

239	Steel Br.	2.499	708	Copper Br. PVD	3.699
299	Matte Black	3.375	726	Warm Bronze Br. PVD	3.699
707	Black Metal Br. PVD	3.699	727	Brass Br. PVD	3.699

57225



Wall-mounted adjustable showerhead MECCANICA.
- Mist function
- 1/2” connections
- Projection from the wall 7-1/16”
- Flow rate 0.14 GPM at 60 PSI

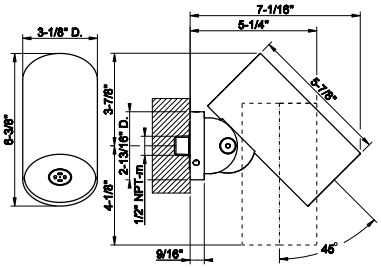

239	Steel Br.	2.463	708	Copper Br. PVD	3.644
299	Matte Black	3.327	726	Warm Bronze Br. PVD	3.644
707	Black Metal Br. PVD	3.644	727	Brass Br. PVD	3.644

57227

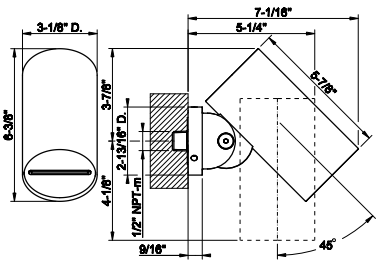

Wall-mounted adjustable showerhead MECCANICA.
- Waterfall function
- 1/2” connections
- Projection from the wall 7-1/16”
- Max flowrate 1.75 GPM



239	Steel Br.	2.727	708	Copper Br. PVD	4.036
299	Matte Black	3.683	726	Warm Bronze Br. PVD	4.036
707	Black Metal Br. PVD	4.036	727	Brass Br. PVD	4.036

57253

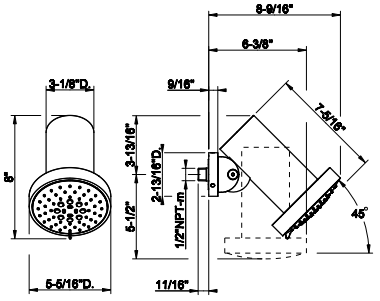

Wall-mounted adjustable showerhead MECCANICA.
- Rain, Spray, Massage function
- 1/2” connections
- Projection from the wall 7-1/16”
- Max flow rate 1.75 GPM



239	Steel Br.	2.910	708	Copper Br. PVD	4.306
299	Matte Black	3.929	726	Warm Bronze Br. PVD	4.306
707	Black Metal Br. PVD	4.306	727	Brass Br. PVD	4.306

57231

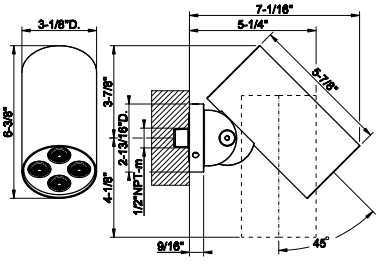

Wall-mounted adjustable showerhead CESELLO.
- Multi-spray function
- 1/2” connections
- Projection from the wall 7-1/16”
- Max flowrate 1.75 GPM



239	Steel Br.	2.499	708	Copper Br. PVD	3.699
299	Matte Black	3.375	726	Warm Bronze Br. PVD	3.699
707	Black Metal Br. PVD	3.699	727	Brass Br. PVD	3.699

57233

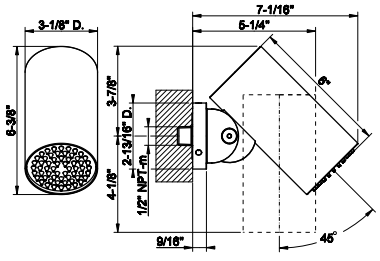

Wall-mounted adjustable showerhead CESELLO.
- Rain function
- 1/2” connections
- Projection from the wall 7-1/16”
- Max flow rate 1.75 GPM



239	Steel Br.	2.499	708	Copper Br. PVD	3.699
299	Matte Black	3.375	726	Warm Bronze Br. PVD	3.699
707	Black Metal Br. PVD	3.699	727	Brass Br. PVD	3.699

57235



Wall-mounted adjustable showerhead CESELLO.
- Mist function
- 1/2” connections
- Projection from the wall 7-1/16”
- Flow rate 0.14GPM at 60 PSI

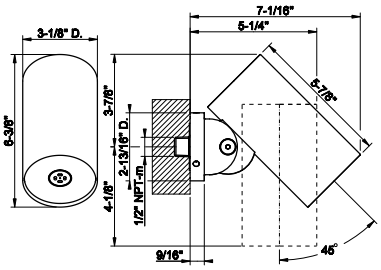

239	Steel Br.	2.463	708	Copper Br. PVD	3.644
299	Matte Black	3.327	726	Warm Bronze Br. PVD	3.644
707	Black Metal Br. PVD	3.644	727	Brass Br. PVD	3.644

57237



Wall-mounted adjustable showerhead CESELLO.
- Waterfall function
- 1/2” connections
- Projection from the wall 7-1/16”
- Max flow rate 1.75 GPM

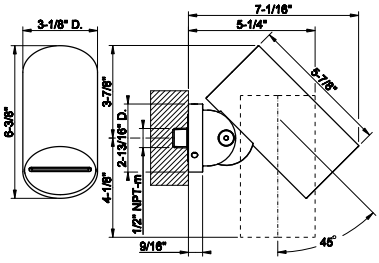

239	Steel Br.	2.727	708	Copper Br. PVD	4.036
299	Matte Black	3.683	726	Warm Bronze Br. PVD	4.036
707	Black Metal Br. PVD	4.036	727	Brass Br. PVD	4.036

57255



Wall-mounted adjustable showerhead CESELLO.
- Rain, Spray, Massage function
- 1/2” connections
- Projection from the wall 7-1/16”
- Max flow rate 1.75 GPM

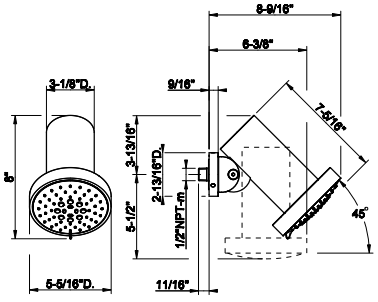

239	Steel Br.	2.910	708	Copper Br. PVD	4.306
299	Matte Black	3.929	726	Warm Bronze Br. PVD	4.306
707	Black Metal Br. PVD	4.306	727	Brass Br. PVD	4.306

54045



Handshower and adjustable sliding rail set
- Adjustable bar
- Adjustable hook
- 59” flex hose
- Wall elbow
- Max flow rate 1.75 GPM

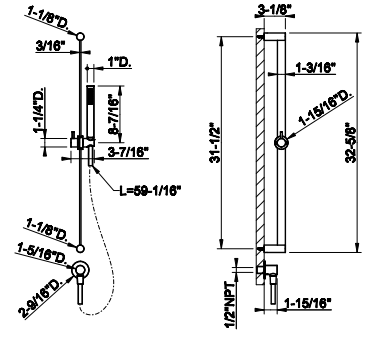

239	Steel Br.	2.450	708	Copper Br. PVD	3.626
299	Matte Black	3.308	726	Warm Bronze Br. PVD	3.626
707	Black Metal Br. PVD	3.626	727	Brass Br. PVD	3.626

54042

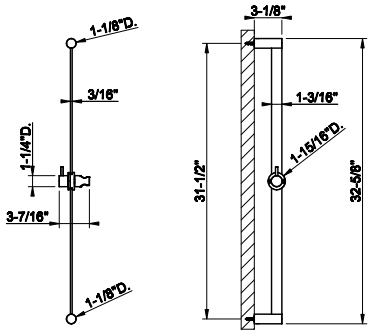

Handshower sliding rail only
- Adjustable hook
- Requires handshower 54054, flex hose 54137 and wall elbow 54269



239	Steel Br.	1.874	708	Copper Br. PVD	2.773
299	Matte Black	2.529	726	Warm Bronze Br. PVD	2.773
707	Black Metal Br. PVD	2.773	727	Brass Br. PVD	2.773

54023

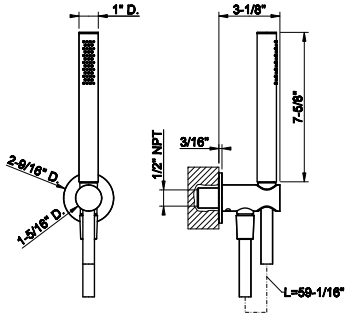

Handshower set
- Fixed hook.
- Wall elbow
- 59” flex hose
- Max flow rate 1.75 GPM



239	Steel Br.	1.006	708	Copper Br. PVD	1.487
299	Matte Black	1.356	726	Warm Bronze Br. PVD	1.487
707	Black Metal Br. PVD	1.487	727	Brass Br. PVD	1.487

63099

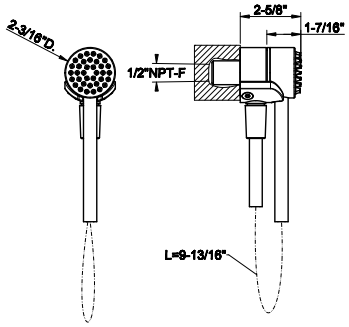

Magnetic anti-limestone handshower set
- Fixed hook
- Wall elbow
- 59” Cromalux flex hose
- Max flow rate 1.75 GPM



031	Chrome	1.213	726	Warm Bronze Br. PVD	1.916
149	Finox Br. Nickel	1.638	710	Brass PVD	1.794
299	Matte Black	1.638	727	Brass Br. PVD	1.916
720	Nickel PVD	1.794	246	Gold PVD	2.037
706	Black Metal PVD	1.794	716	Gold Br. PVD	2.037
707	Black Metal Br. PVD	1.916	845	Dark Bronze	1.916
030	Copper PVD	1.794	187	Aged Bronze	1.916
708	Copper Br. PVD	1.916	713	Antique Brass	1.916
735	Warm Bronze PVD	1.794			

63199

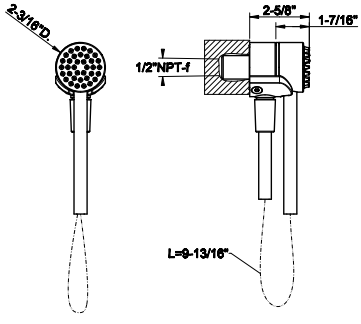

Magnetic anti-limestone handshower set
- Fixed hook
- Wall elbow
- 59” flex hose in black
- Max flow rate 1.75 GPM



031	Chrome	1.213	726	Warm Bronze Br. PVD	1.916
149	Finox Br. Nickel	1.638	710	Brass PVD	1.794
299	Matte Black	1.638	727	Brass Br. PVD	1.916
720	Nickel PVD	1.794	246	Gold PVD	2.037
706	Black Metal PVD	1.794	716	Gold Br. PVD	2.037
707	Black Metal Br. PVD	1.916	845	Dark Bronze	1.916
030	Copper PVD	1.794	187	Aged Bronze	1.916
708	Copper Br. PVD	1.916	713	Antique Brass	1.916
735	Warm Bronze PVD	1.794			

32971



Round body spray
- 1/2” connections
- Max flow rate 1 GPM at 60 PSI

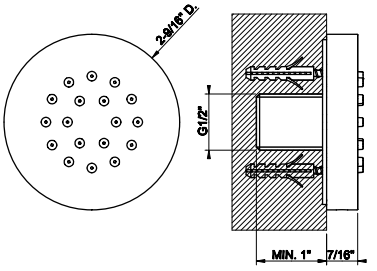

031	Chrome	552	726	Warm Bronze Br. PVD	873
149	Finox Br. Nickel	746	710	Brass PVD	840
299	Matte Black	746	727	Brass Br. PVD	873
147	Chrome Br.	766	246	Gold PVD	929
720	Nickel PVD	818	716	Gold Br. PVD	929
706	Black Metal PVD	818	845	Dark Bronze	873
707	Black Metal Br. PVD	873	187	Aged Bronze	873
030	Copper PVD	818	713	Antique Brass	873
708	Copper Br. PVD	873	279	Matte White	746
735	Warm Bronze PVD	840			

32985



In-wall rough valve for pivotable body spray 32982

32985+32982

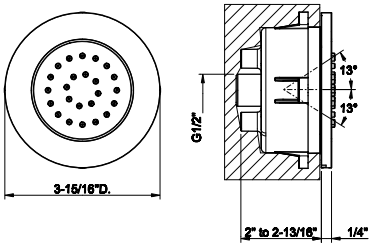

031	Chrome	406

32982



TRIM PARTS ONLY Round in-wall pivotable body spray
- 1/2” connections
- Requires in-wall rough valve 32985
- Max flow rate 1 GPM at60 PSI

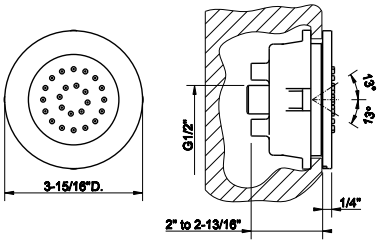

031	Chrome	773	726	Warm Bronze Br. PVD	1.223
149	Finox Br. Nickel	1.045	710	Brass PVD	1.145
299	Matte Black	1.045	727	Brass Br. PVD	1.223
147	Chrome Br.	1.045	246	Gold PVD	1.300
720	Nickel PVD	1.145	716	Gold Br. PVD	1.300
706	Black Metal PVD	1.145	845	Dark Bronze	1.223
707	Black Metal Br. PVD	1.223	187	Aged Bronze	1.223
030	Copper PVD	1.145	713	Antique Brass	1.223
708	Copper Br. PVD	1.223	279	Matte White	1.045
735	Warm Bronze PVD	1.145			

13375



Pivotable body spray
- 1/2” connections
- Max flow rate 0.9 GPM at 60 PSI

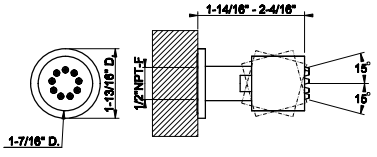

031	Chrome	405	726	Warm Bronze Br. PVD	639
149	Finox Br. Nickel	547	710	Brass PVD	598
299	Matte Black	547	727	Brass Br. PVD	639
147	Chrome Br.	547	246	Gold PVD	680
720	Nickel PVD	598	716	Gold Br. PVD	680
706	Black Metal PVD	598	845	Dark Bronze	639
707	Black Metal Br. PVD	639	187	Aged Bronze	639
030	Copper PVD	598	713	Antique Brass	639
708	Copper Br. PVD	639	279	Matte White	547
735	Warm Bronze PVD	598			

20295

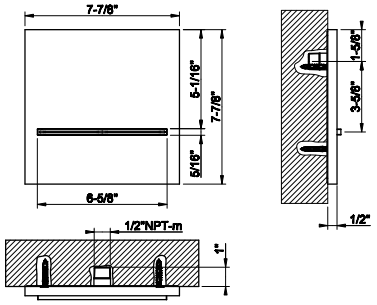

Wall-fixing cascade spout with separate control (not included).
- 1/2" connections
- Flow rate 4.8 GPM at 60 PSI



299	Matte Black	2.631	710	Brass PVD	2.884
720	Nickel PVD	2.884	727	Brass Br. PVD	3.077
706	Black Metal PVD	2.884	246	Gold PVD	3.273
707	Black Metal Br. PVD	3.077	716	Gold Br. PVD	3.273
030	Copper PVD	2.884	845	Dark Bronze	3.077
708	Copper Br. PVD	3.077	187	Aged Bronze	3.077
735	Warm Bronze PVD	2.884	713	Antique Brass	3.077
726	Warm Bronze Br. PVD	3.077	279	Matte White	2.631

65295

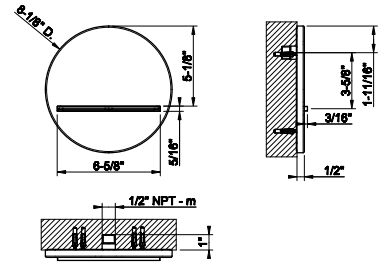

Wall-fixing cascade spout
- 1/2" connections
- Flow rate 4.8 GPM at 60 PSI

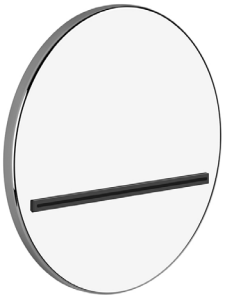

031	Chrome	1.937	726	Warm Bronze Br. PVD	3.058
149	Finox Br. Nickel	2.614	710	Brass PVD	2.864
299	Matte Black	2.614	727	Brass Br. PVD	3.058
720	Nickel PVD	2.864	246	Gold PVD	3.255
706	Black Metal PVD	2.864	716	Gold Br. PVD	3.255
707	Black Metal Br. PVD	3.058	845	Dark Bronze	3.058
030	Copper PVD	2.864	187	Aged Bronze	3.058
708	Copper Br. PVD	3.058	713	Antique Brass	3.058
735	Warm Bronze PVD	2.864	279	Matte White	2.614

54161

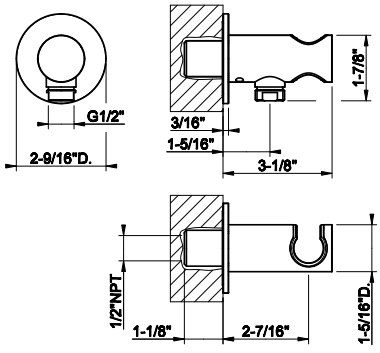

Wall elbow with backplate
- 1/2" connections
- Fixed hook



239	Steel Br.	427	708	Copper Br. PVD	633
299	Matte Black	578	726	Warm Bronze Br. PVD	633
707	Black Metal Br. PVD	633	727	Brass Br. PVD	633

54269

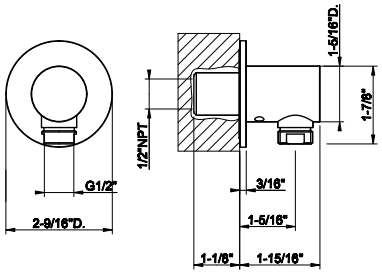

Wall elbow with backplate
- 1/2" connections



239	Steel Br.	396	708	Copper Br. PVD	586
299	Matte Black	534	726	Warm Bronze Br. PVD	586
707	Black Metal Br. PVD	586	727	Brass Br. PVD	586

54157

Handshower fixed hook



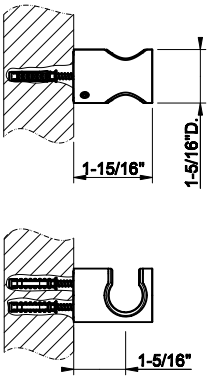

239	Steel Br.	379	708	Copper Br. PVD	559
299	Matte Black	512	726	Warm Bronze Br. PVD	559
707	Black Metal Br. PVD	559	727	Brass Br. PVD	559

54160

Handshower adjustable hook



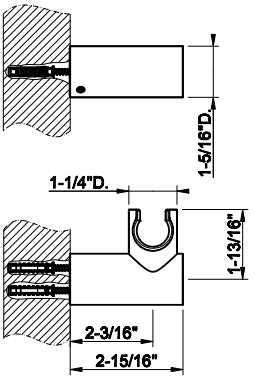

239	Steel Br.	511	708	Copper Br. PVD	756
299	Matte Black	689	726	Warm Bronze Br. PVD	756
707	Black Metal Br. PVD	756	727	Brass Br. PVD	756

54054

Handshower
• Max flow rate 1.75 GPM



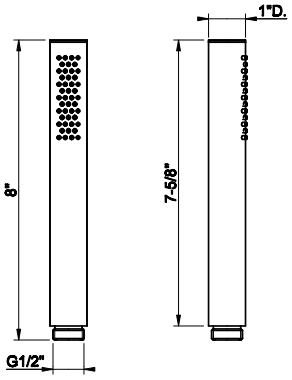

239	Steel Br.	474	708	Copper Br. PVD	703
299	Matte Black	642	726	Warm Bronze Br. PVD	703
707	Black Metal Br. PVD	703	727	Brass Br. PVD	703

54137

59" black flex hose with options to change the metal ends with desired finish



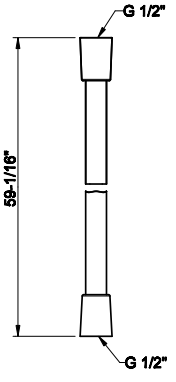

031	Chrome	183	735	Warm Bronze PVD	290
239	Steel Br.	179	726	Warm Bronze Br. PVD	283
299	Matte Black	241	710	Brass PVD	290
720	Nickel PVD	248	727	Brass Br. PVD	283
706	Black Metal PVD	290	845	Dark Bronze	248
707	Black Metal Br. PVD	283	187	Aged Bronze	248
030	Copper PVD	290	713	Antique Brass	248
708	Copper Br. PVD	283			

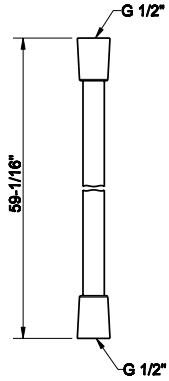

01637

59” flex hose



031	Chrome	134	726	Warm Bronze Br. PVD	214
149	Finox Br. Nickel	173	710	Brass PVD	203
299	Matte Black	173	727	Brass Br. PVD	214
147	Chrome Br.	173	246	Gold PVD	227
720	Nickel PVD	203	716	Gold Br. PVD	227
706	Black Metal PVD	203	845	Dark Bronze	214
707	Black Metal Br. PVD	214	187	Aged Bronze	214
030	Copper PVD	203	713	Antique Brass	214
708	Copper Br. PVD	214	279	Matte White	173
735	Warm Bronze PVD	203			


GESSI
GESSI316
GESSI
316
ACCESSORIES

54701

Wall-mounted soap dish, white



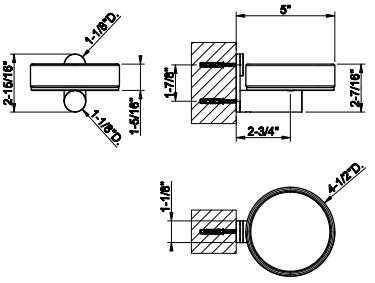

239	Steel Br.	971	708	Copper Br. PVD	1.437
299	Matte Black	1.310	726	Warm Bronze Br. PVD	1.437
707	Black Metal Br. PVD	1.437	727	Brass Br. PVD	1.437

54702

Wall-mounted soap dish, black



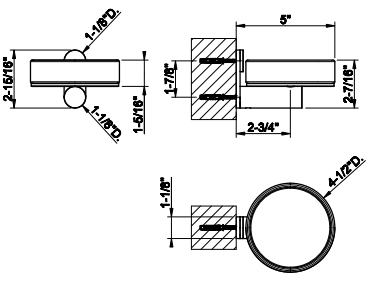

239	Steel Br.	971	708	Copper Br. PVD	1.437
299	Matte Black	1.310	726	Warm Bronze Br. PVD	1.437
707	Black Metal Br. PVD	1.437	727	Brass Br. PVD	1.437

54707

Wall-mounted holder, white



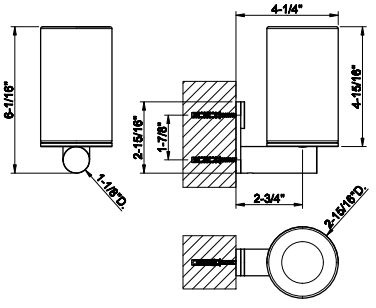

239	Steel Br.	759	708	Copper Br. PVD	1.125
299	Matte Black	1.026	726	Warm Bronze Br. PVD	1.125
707	Black Metal Br. PVD	1.125	727	Brass Br. PVD	1.125

54708

Wall-mounted holder, black



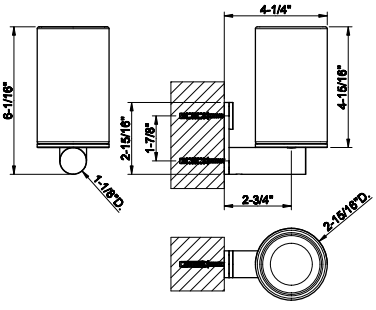

239	Steel Br.	759	708	Copper Br. PVD	1.125
299	Matte Black	1.026	726	Warm Bronze Br. PVD	1.125
707	Black Metal Br. PVD	1.125	727	Brass Br. PVD	1.125

GESSI316 ACCESSORIES

54713

Wall-mounted liquid soap dispenser , white

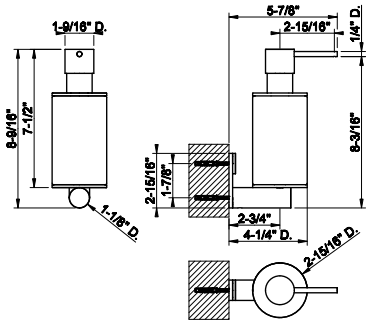



239	Steel Br.	1.301	708	Copper Br. PVD	1.926
299	Matte Black	1.757	726	Warm Bronze Br. PVD	1.926
707	Black Metal Br. PVD	1.926	727	Brass Br. PVD	1.926

54714

Wall-mounted liquid soap dispenser - black

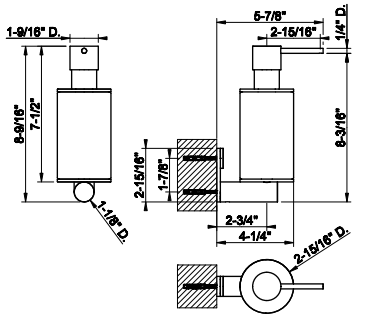



239	Steel Br.	1.301	708	Copper Br. PVD	1.926
299	Matte Black	1.757	726	Warm Bronze Br. PVD	1.926
707	Black Metal Br. PVD	1.926	727	Brass Br. PVD	1.926

54719

Wall-mounted brush holder, white

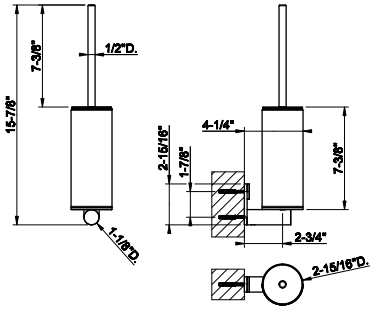



239	Steel Br.	1.077	708	Copper Br. PVD	1.594
299	Matte Black	1.455	726	Warm Bronze Br. PVD	1.594
707	Black Metal Br. PVD	1.594	727	Brass Br. PVD	1.594

54720

Wall-mounted brush holder, black

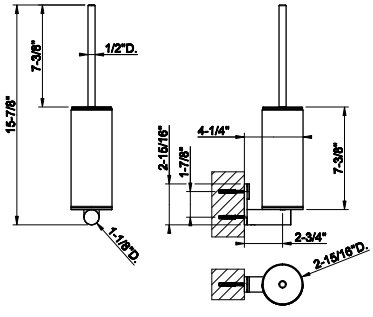



239	Steel Br.	1.077	708	Copper Br. PVD	1.594
299	Matte Black	1.455	726	Warm Bronze Br. PVD	1.594
707	Black Metal Br. PVD	1.594	727	Brass Br. PVD	1.594

54721

Wall-mounted brush holder



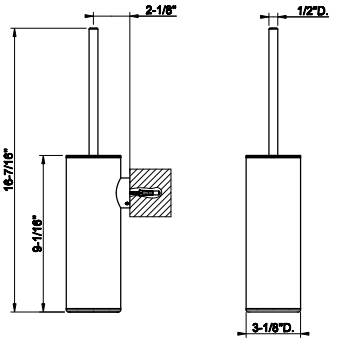

239	Steel Br.	1.085	708	Copper Br. PVD	1.608
299	Matte Black	1.465	726	Warm Bronze Br. PVD	1.608
707	Black Metal Br. PVD	1.608	727	Brass Br. PVD	1.608

54725

Standing soap holder, white



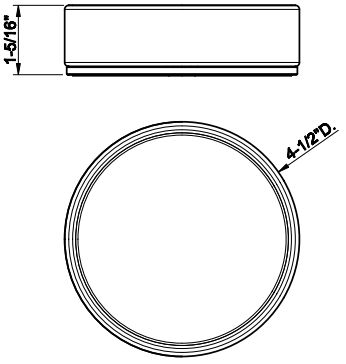

239	Steel Br.	610	708	Copper Br. PVD	903
299	Matte Black	823	726	Warm Bronze Br. PVD	903
707	Black Metal Br. PVD	903	727	Brass Br. PVD	903

54726

Standing soap holder, black



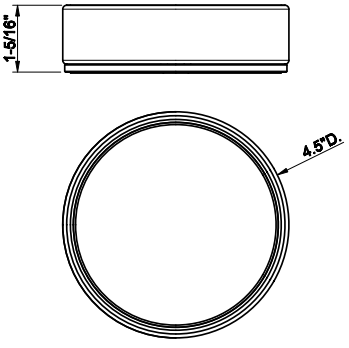

239	Steel Br.	610	708	Copper Br. PVD	903
299	Matte Black	823	726	Warm Bronze Br. PVD	903
707	Black Metal Br. PVD	903	727	Brass Br. PVD	903

54731

Standing tumbler holder, white



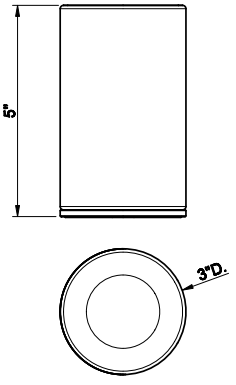

239	Steel Br.	381	708	Copper Br. PVD	564
299	Matte Black	515	726	Warm Bronze Br. PVD	564
707	Black Metal Br. PVD	564	727	Brass Br. PVD	564

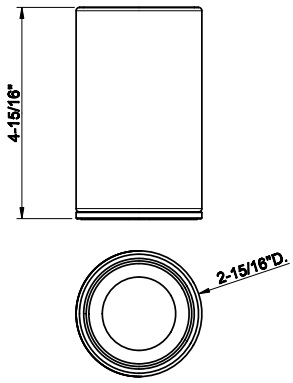

54732

Standing tumbler holder, black



239	Steel Br.	381	708	Copper Br. PVD	564
299	Matte Black	515	726	Warm Bronze Br. PVD	564
707	Black Metal Br. PVD	564	727	Brass Br. PVD	564

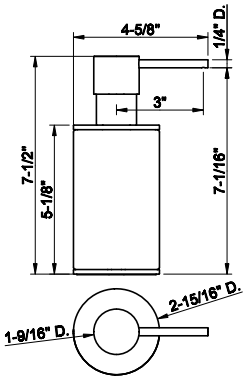

54737

Standing soap dispenser holder, white



239	Steel Br.	940	708	Copper Br. PVD	1.392
299	Matte Black	1.270	726	Warm Bronze Br. PVD	1.392
707	Black Metal Br. PVD	1.392	727	Brass Br. PVD	1.392

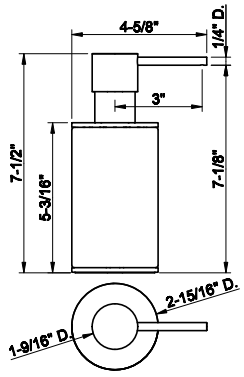

54738

Standing soap dispenser holder, black



239	Steel Br.	940	708	Copper Br. PVD	1.392
299	Matte Black	1.270	726	Warm Bronze Br. PVD	1.392
707	Black Metal Br. PVD	1.392	727	Brass Br. PVD	1.392

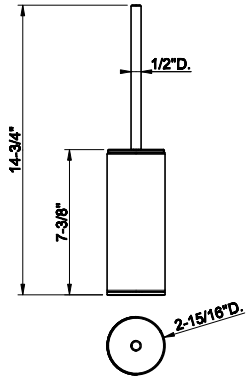

54743

Standing brush holder, white



239	Steel Br.	703	708	Copper Br. PVD	1.040
299	Matte Black	950	726	Warm Bronze Br. PVD	1.040
707	Black Metal Br. PVD	1.040	727	Brass Br. PVD	1.040



54744

Standing brush holder, black

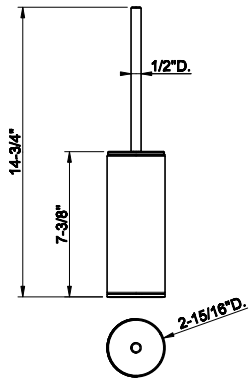

239	Steel Br.	703	708	Copper Br. PVD	1.040
299	Matte Black	950	726	Warm Bronze Br. PVD	1.040
707	Black Metal Br. PVD	1.040	727	Brass Br. PVD	1.040



54745

Standing brush holder

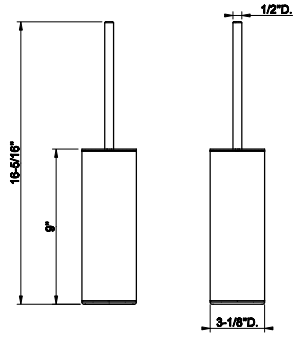

239	Steel Br.	898	708	Copper Br. PVD	1.330
299	Matte Black	1.213	726	Warm Bronze Br. PVD	1.330
707	Black Metal Br. PVD	1.330	727	Brass Br. PVD	1.330



54749

Wall-mounted tissue holder

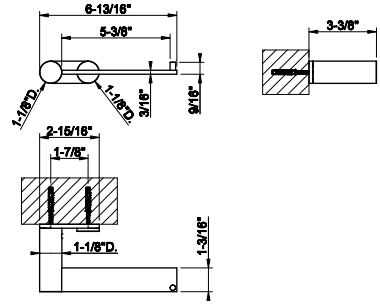

239	Steel Br.	776	708	Copper Br. PVD	1.146
299	Matte Black	1.047	726	Warm Bronze Br. PVD	1.146
707	Black Metal Br. PVD	1.146	727	Brass Br. PVD	1.146



54797

12" towel bar

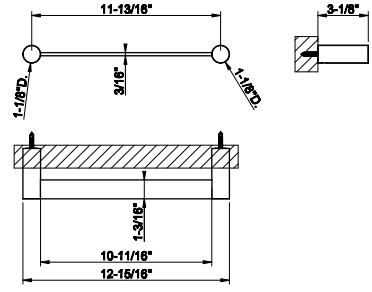

239	Steel Br.	736	708	Copper Br. PVD	1.090
299	Matte Black	995	726	Warm Bronze Br. PVD	1.090
707	Black Metal Br. PVD	1.090	727	Brass Br. PVD	1.090

54800

18” towel bar

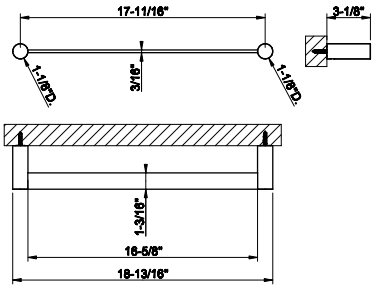



239	Steel Br.	797	708	Copper Br. PVD	1.182
299	Matte Black	1.077	726	Warm Bronze Br. PVD	1.182
707	Black Metal Br. PVD	1.182	727	Brass Br. PVD	1.182

54803

24” towel bar

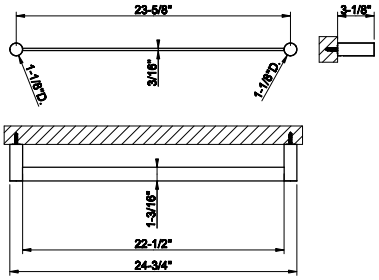



239	Steel Br.	865	708	Copper Br. PVD	1.282
299	Matte Black	1.169	726	Warm Bronze Br. PVD	1.282
707	Black Metal Br. PVD	1.282	727	Brass Br. PVD	1.282

54821

Wall-mounted garment hook

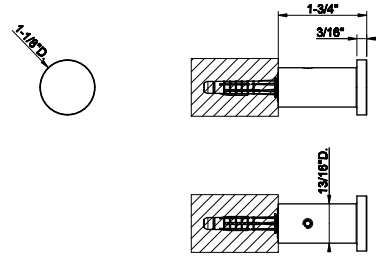



239	Steel Br.	110	708	Copper Br. PVD	160
299	Matte Black	148	726	Warm Bronze Br. PVD	160
707	Black Metal Br. PVD	160	727	Brass Br. PVD	160

54921

Towel rail for glass fixing - 12” length

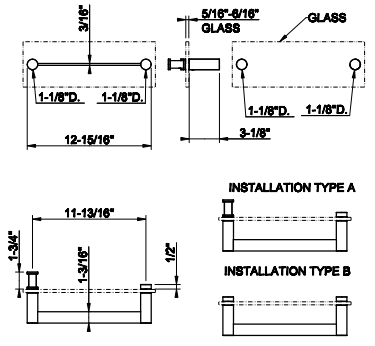

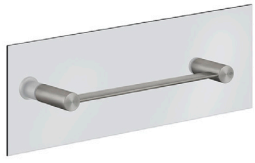

239	Steel Br.	1.309	708	Copper Br. PVD	1.937
299	Matte Black	1.770	726	Warm Bronze Br. PVD	1.937
707	Black Metal Br. PVD	1.937	727	Brass Br. PVD	1.937

54923

Towel rail for glass fixing - 18” length

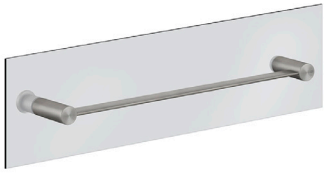

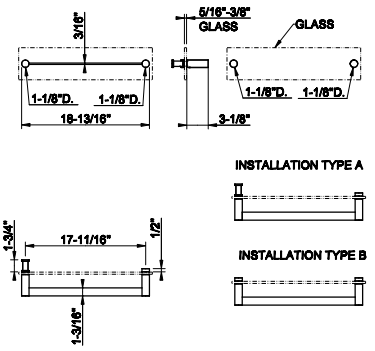

239	Steel Br.	1.448	708	Copper Br. PVD	2.139
299	Matte Black	1.955	726	Warm Bronze Br. PVD	2.139
707	Black Metal Br. PVD	2.139	727	Brass Br. PVD	2.139

54925

Towel rail for glass fixing - 24” length

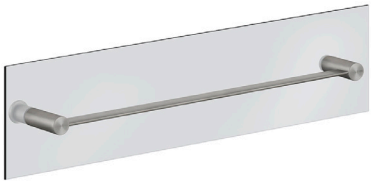

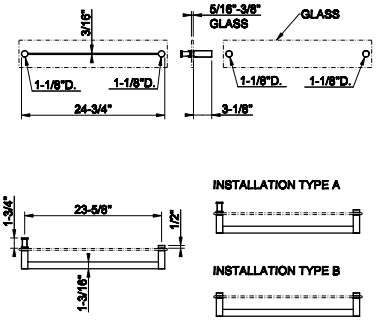

239	Steel Br.	1.591	708	Copper Br. PVD	2.352
299	Matte Black	2.148	726	Warm Bronze Br. PVD	2.352
707	Black Metal Br. PVD	2.352	727	Brass Br. PVD	2.352

58424

Safety grip-handle for bathtub and shower enclosure
• 18” length



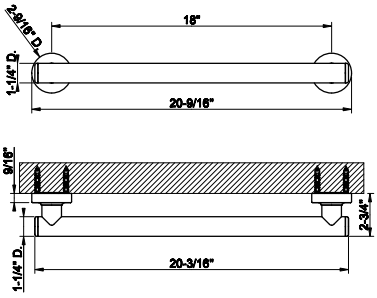

031	Chrome	1.932	726	Warm Bronze Br. PVD	3.054
149	Finox Br. Nickel	2.611	710	Brass PVD	2.862
299	Matte Black	2.611	727	Brass Br. PVD	3.056
720	Nickel PVD	2.862	246	Gold PVD	3.243
706	Black Metal PVD	2.862	716	Gold Br. PVD	3.243
707	Black Metal Br. PVD	3.056	845	Dark Bronze	3.056
030	Copper PVD	2.862	187	Aged Bronze	3.056
708	Copper Br. PVD	3.056	713	Antique Brass	3.056
735	Warm Bronze PVD	2.862	279	Matte White	2.611

58430

Safety grip-handle for bathtub and shower enclosure
• 24” length



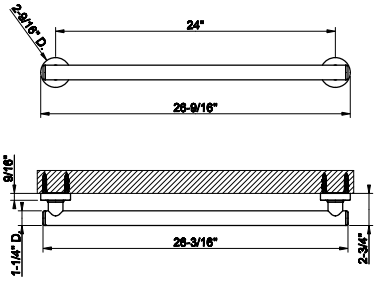

031	Chrome	1.967	726	Warm Bronze Br. PVD	3.108
149	Finox Br. Nickel	2.656	710	Brass PVD	2.911
299	Matte Black	2.656	727	Brass Br. PVD	3.108
720	Nickel PVD	2.911	246	Gold PVD	3.304
706	Black Metal PVD	2.911	716	Gold Br. PVD	3.304
707	Black Metal Br. PVD	3.108	845	Dark Bronze	3.108
030	Copper PVD	2.911	187	Aged Bronze	3.108
708	Copper Br. PVD	3.108	713	Antique Brass	3.108
735	Warm Bronze PVD	2.911	279	Matte White	2.656

58432

Safety grip-handle for bathtub and shower enclosure
• 36” length

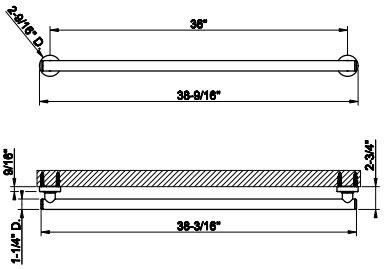

031	Chrome	2.165	726	Warm Bronze Br. PVD	3.419
149	Finox Br. Nickel	2.921	710	Brass PVD	3.203
299	Matte Black	2.921	727	Brass Br. PVD	3.419
720	Nickel PVD	3.203	246	Gold PVD	3.637
706	Black Metal PVD	3.203	716	Gold Br. PVD	3.637
707	Black Metal Br. PVD	3.419	845	Dark Bronze	3.419
030	Copper PVD	3.203	187	Aged Bronze	3.419
708	Copper Br. PVD	3.419	713	Antique Brass	3.419
735	Warm Bronze PVD	3.203	279	Matte White	2.921




GESSI
GESSI 316
TOTAL LOOK



54611

Flush Actuator Plate
•Stainless steel
•Compatible with GEBERIT models: 111.597.001, 111.902.005, 111.798.00.1, 111.335.00.5
•Without visible fixing system

031	Chrome	1.228	708	Copper Br. PVD	1.813
239	Steel Br.	1.228	735	Warm Bronze PVD	1.813
275	Matte Cipria	1.653	726	Warm Bronze Br. PVD	1.813
273	Matte Greige	1.653	710	Brass PVD	1.813
280	Matte Ocra	1.653	727	Brass Br. PVD	1.813
281	Matte Coral	1.653	246	Gold PVD	2.058
276	Matte Agave	1.653	716	Gold Br. PVD	2.058
299	Matte Black	1.653	845	Dark Bronze	1.813
720	Nickel PVD	1.813	187	Aged Bronze	1.813
706	Black Metal PVD	1.813	713	Antique Brass	1.813
707	Black Metal Br. PVD	1.813	279	Matte White	1.653
030	Copper PVD	1.813			

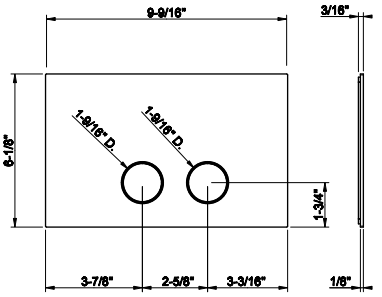

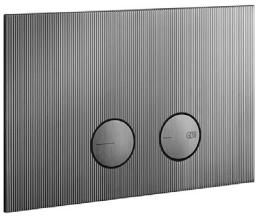

54671

Flush Actuator Plate RIGATO
•Stainless steel
•Compatible with GEBERIT models: 111.597.001, 111.902.005, 111.798.00.1, 111.335.00.5
•Without visible fixing system

031	Chrome	2.585	708	Copper Br. PVD	4.082
149	Finox Br. Nickel	3.490	735	Warm Bronze PVD	3.824
299	Matte Black	3.490	726	Warm Bronze Br. PVD	4.082
720	Nickel PVD	3.824	710	Brass PVD	3.824
706	Black Metal PVD	3.824	727	Brass Br. PVD	4.082
707	Black Metal Br. PVD	4.082	187	Aged Bronze	4.082
030	Copper PVD	3.824	713	Antique Brass	4.082

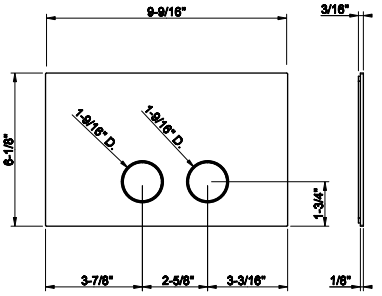

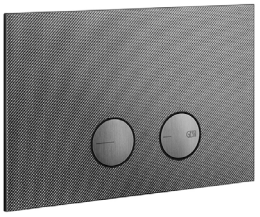

54681

Flush Actuator Plate DIAMANTATO
•Stainless steel
•Compatible with GEBERIT models: 111.597.001, 111.902.005, 111.798.00.1, 111.335.00.5
•Without visible fixing system

031	Chrome	2.585	708	Copper Br. PVD	4.082
149	Finox Br. Nickel	3.490	735	Warm Bronze PVD	3.824
299	Matte Black	3.490	726	Warm Bronze Br. PVD	4.082
720	Nickel PVD	3.824	710	Brass PVD	3.824
706	Black Metal PVD	3.824	727	Brass Br. PVD	4.082
707	Black Metal Br. PVD	4.082	187	Aged Bronze	4.082
030	Copper PVD	3.824	713	Antique Brass	4.082

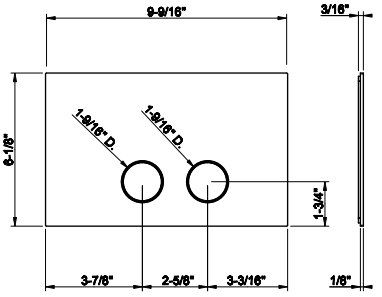



54601

Counter washbasin In stainless steel, without overflow waste. Without basin waste. It can be combined with waste 54597.

239	Steel Br.	2.449	708	Copper Br. PVD	6.986
299	Matte Black	4.431	726	Warm Bronze Br. PVD	6.986
707	Black Metal Br. PVD	6.986	727	Brass Br. PVD	6.986

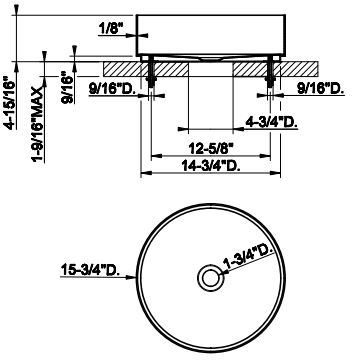

GESSI316 TOTAL LOOK

01578

Undermounted washbasin brackets for 54601, 54605, 54606.

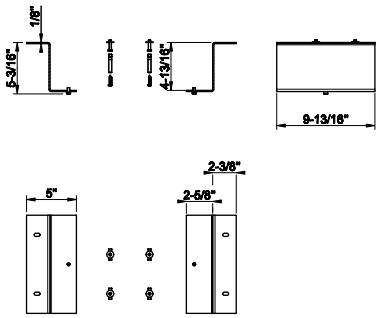



031	Chrome	428

54597

1 1/4" push drain with or without overflow feature
- Recommended for Gessi 316 Collection

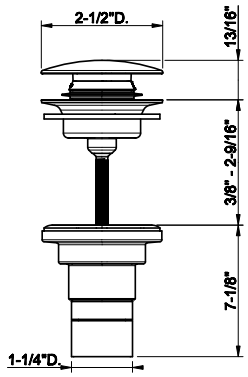



239	Steel Br.	212	708	Copper Br. PVD	313
299	Matte Black	287	726	Warm Bronze Br. PVD	313
707	Black Metal Br. PVD	313	727	Brass Br. PVD	313



INCISO

58011



Widespread washbasin mixer with pop-up assembly
- Spout projection 5-1/2”
- Height 5-11/16”
- 1-1/4” D. pop-up drain and flexiblehoses with 9/16” – 24 UNEF connections.
- Max flow rate 1.2 GPM
- ADA compliant

031	Chrome	2.111	726	Warm Bronze Br. PVD	3.334
149	Finox Br. Nickel	2.849	710	Brass PVD	3.124
299	Matte Black	2.849	727	Brass Br. PVD	3.334
720	Nickel PVD	3.124	246	Gold PVD	3.547
706	Black Metal PVD	3.124	716	Gold Br. PVD	3.547
707	Black Metal Br. PVD	3.334	187	Aged Bronze	3.334
030	Copper PVD	3.124	713	Antique Brass	3.334
708	Copper Br. PVD	3.334	845	Dark Bronze	3.334
735	Warm Bronze PVD	3.124			

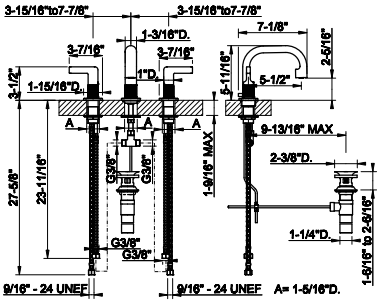

58012



Widespread washbasin mixer without pop-up assembly
- Spout projection 5-1/2”
- Height 5-11/16”
- Drain not included - See DRAINSsection
- Max flow rate 1.2 GPM
- ADA compliant

031	Chrome	2.073	726	Warm Bronze Br. PVD	3.273
149	Finox Br. Nickel	2.797	710	Brass PVD	3.068
299	Matte Black	2.797	727	Brass Br. PVD	3.273
720	Nickel PVD	3.068	246	Gold PVD	3.482
706	Black Metal PVD	3.068	716	Gold Br. PVD	3.482
707	Black Metal Br. PVD	3.273	187	Aged Bronze	3.273
030	Copper PVD	3.068	713	Antique Brass	3.273
708	Copper Br. PVD	3.273	845	Dark Bronze	3.273
735	Warm Bronze PVD	3.068			

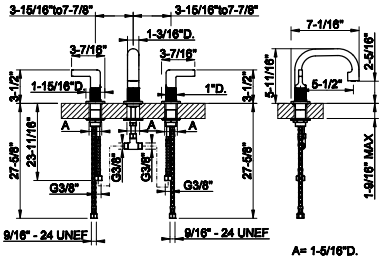

58013



Widespread washbasin mixer with pop-up assembly
- Spout projection 6-5/16”
- Height 9-7/16”
- 1-1/4” D. pop-up drain and flexiblehoses with 9/16” – 24 UNEF connections.
- Max flow rate 1.2 GPM
- ADA compliant

031	Chrome	2.111	726	Warm Bronze Br. PVD	3.334
149	Finox Br. Nickel	2.849	710	Brass PVD	3.124
299	Matte Black	2.849	727	Brass Br. PVD	3.334
720	Nickel PVD	3.124	246	Gold PVD	3.547
706	Black Metal PVD	3.124	716	Gold Br. PVD	3.547
707	Black Metal Br. PVD	3.334	187	Aged Bronze	3.334
030	Copper PVD	3.124	713	Antique Brass	3.334
708	Copper Br. PVD	3.334	845	Dark Bronze	3.334
735	Warm Bronze PVD	3.124			

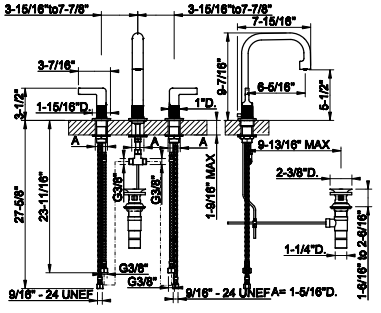

58014



Widespread washbasin mixer without pop-up assembly
- Spout projection 6-5/16”
- Height 9-7/16”
- Drain not included - See DRAINSsection
- Max flow rate 1.2 GPM
- ADA compliant

031	Chrome	2.073	726	Warm Bronze Br. PVD	3.273
149	Finox Br. Nickel	2.797	710	Brass PVD	3.068
299	Matte Black	2.797	727	Brass Br. PVD	3.273
720	Nickel PVD	3.068	246	Gold PVD	3.482
706	Black Metal PVD	3.068	716	Gold Br. PVD	3.482
707	Black Metal Br. PVD	3.273	187	Aged Bronze	3.273
030	Copper PVD	3.068	713	Antique Brass	3.273
708	Copper Br. PVD	3.273	845	Dark Bronze	3.273
735	Warm Bronze PVD	3.068			

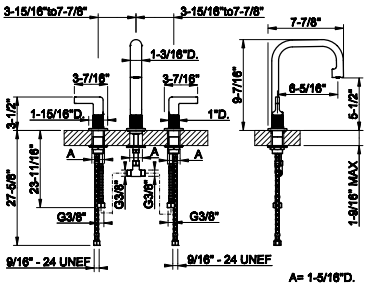

48089+58090

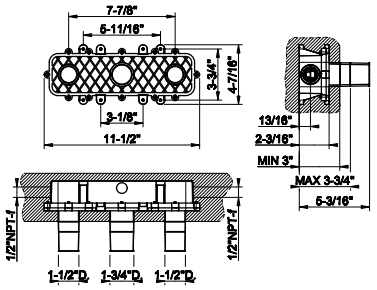

48089

Wall-mounted washbasin mixer rough valve
- Drain not included - See DRAINS section

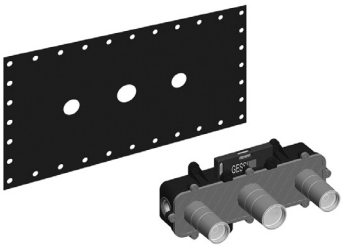

031	Chrome	1.069

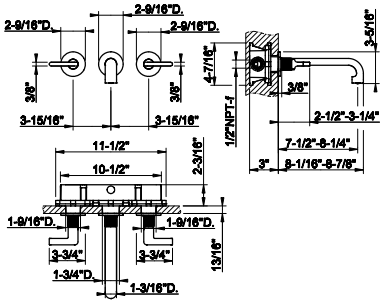

58090

TRIM PARTS ONLY Wall-mounted wahbasin mixer trim, without waste
- Spout projection 7-1/2" - 8-1/4"
- Drain not included - See DRAINS section
- Requires in-wall rough valve 48089
- Max flow rate 1.2 GPM
- ADA compliant



031	Chrome	1.529	726	Warm Bronze Br. PVD	2.415
149	Finox Br. Nickel	2.064	710	Brass PVD	2.263
299	Matte Black	2.064	727	Brass Br. PVD	2.415
720	Nickel PVD	2.263	246	Gold PVD	2.567
706	Black Metal PVD	2.263	716	Gold Br. PVD	2.567
707	Black Metal Br. PVD	2.415	187	Aged Bronze	2.415
030	Copper PVD	2.263	713	Antique Brass	2.415
708	Copper Br. PVD	2.415	845	Dark Bronze	2.415
735	Warm Bronze PVD	2.263			

48089+58092

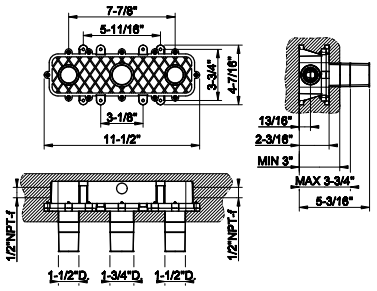

48089

Wall-mounted washbasin mixer rough valve
- Drain not included - See DRAINS section

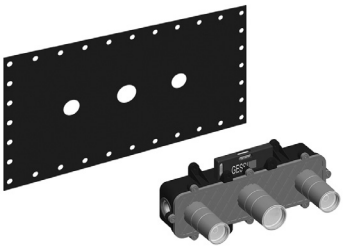

031	Chrome	1.069

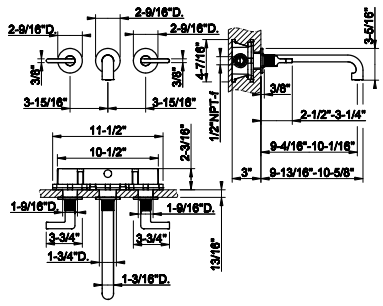

58092

TRIM PARTS ONLY Wall-mounted wahbasin mixer trim, without waste
- Spout projection 9-4/16" - 10-1/16"
- Drain not included - See DRAINS section
- Requires in-wall rough valve 48089
- Max flow rate 1.2 GPM
- ADA compliant



031	Chrome	1.562	726	Warm Bronze Br. PVD	2.468
149	Finox Br. Nickel	2.110	710	Brass PVD	2.312
299	Matte Black	2.110	727	Brass Br. PVD	2.468
720	Nickel PVD	2.312	246	Gold PVD	2.622
706	Black Metal PVD	2.312	716	Gold Br. PVD	2.622
707	Black Metal Br. PVD	2.468	187	Aged Bronze	2.468
030	Copper PVD	2.312	713	Antique Brass	2.468
708	Copper Br. PVD	2.468	845	Dark Bronze	2.468
735	Warm Bronze PVD	2.312			

58001



Single lever washbasin mixer with pop-up assembly
- Spout projection 5-5/16”
- Height 7-11/16”
- 1-1/4” D. pop-up drain and flexible hoses with 9/16” – 24 UNEF connections.
- Max flow rate 1.2 GPM
- ADA compliant

031	Chrome	1.272	726	Warm Bronze Br. PVD	2.010
149	Finox Br. Nickel	1.716	710	Brass PVD	1.882
299	Matte Black	1.716	727	Brass Br. PVD	2.010
720	Nickel PVD	1.882	246	Gold PVD	2.136
706	Black Metal PVD	1.882	716	Gold Br. PVD	2.136
707	Black Metal Br. PVD	2.010	187	Aged Bronze	2.010
030	Copper PVD	1.882	713	Antique Brass	2.010
708	Copper Br. PVD	2.010	845	Dark Bronze	2.010
735	Warm Bronze PVD	1.882			

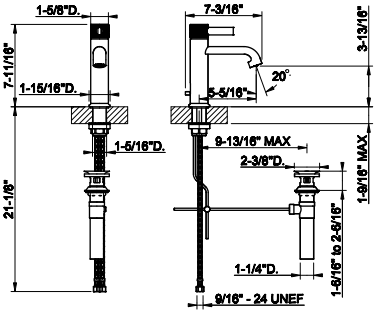

58002



Single lever washbasin mixer without pop-up assembly
- Spout projection 5-5/16”
- Height 7-11/16”
- Drain not included - See DRAINS section
- Max flow rate 1.2 GPM
- ADA compliant

031	Chrome	1.230	726	Warm Bronze Br. PVD	1.942
149	Finox Br. Nickel	1.660	710	Brass PVD	1.820
299	Matte Black	1.660	727	Brass Br. PVD	1.942
720	Nickel PVD	1.820	246	Gold PVD	2.064
706	Black Metal PVD	1.820	716	Gold Br. PVD	2.064
707	Black Metal Br. PVD	1.942	187	Aged Bronze	1.942
030	Copper PVD	1.820	713	Antique Brass	1.942
708	Copper Br. PVD	1.942	845	Dark Bronze	1.942
735	Warm Bronze PVD	1.820			

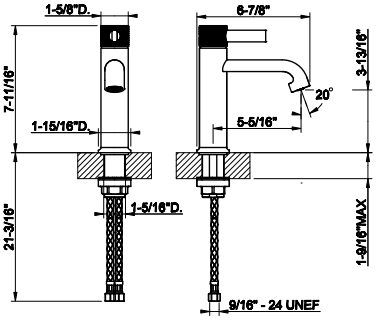

58003



Tall single lever washbasin mixer with pop-up assembly
- Spout projection 5-5/16”
- Height 13-5/16”
- 1-1/4” D. pop-up drain andflexible hoses with 9/16” – 24 UNEF connections
- Max flow rate 1.2 GPM
- ADA compliant

031	Chrome	1.401	726	Warm Bronze Br. PVD	2.214
149	Finox Br. Nickel	1.891	710	Brass PVD	2.074
299	Matte Black	1.891	727	Brass Br. PVD	2.214
720	Nickel PVD	2.074	246	Gold PVD	2.353
706	Black Metal PVD	2.074	716	Gold Br. PVD	2.353
707	Black Metal Br. PVD	2.214	187	Aged Bronze	2.214
030	Copper PVD	2.074	713	Antique Brass	2.214
708	Copper Br. PVD	2.214	845	Dark Bronze	2.214
735	Warm Bronze PVD	2.074			

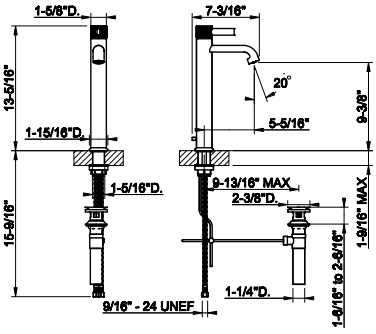

58004



Tall single lever washbasin mixer without pop-up assembly
- Spout projection 5-5/16”
- Height 13-5/16”
- Drain not included - SeeDRAINS section
- Max flow rate 1.2 GPM
- ADA compliant

031	Chrome	1.357	726	Warm Bronze Br. PVD	2.148
149	Finox Br. Nickel	1.834	710	Brass PVD	2.011
299	Matte Black	1.834	727	Brass Br. PVD	2.148
720	Nickel PVD	2.011	246	Gold PVD	2.282
706	Black Metal PVD	2.011	716	Gold Br. PVD	2.282
707	Black Metal Br. PVD	2.148	187	Aged Bronze	2.148
030	Copper PVD	2.011	713	Antique Brass	2.148
708	Copper Br. PVD	2.148	845	Dark Bronze	2.148
735	Warm Bronze PVD	2.011			

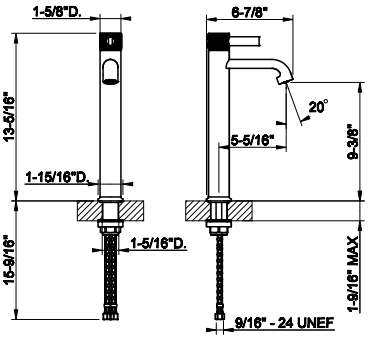

58009

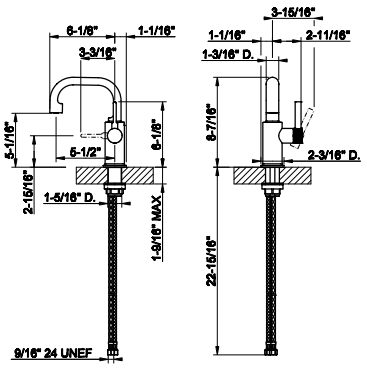

Basin mixer, flexible connections, without waste
- Max flow rate 1,2 GPM
- Height 8-7/16”
- Spout projection 5-1/2”
- Drain not included - See DRAINS section

031	Chrome	1.406	726	Warm Bronze Br. PVD	2.222
149	Finox Br. Nickel	1.900	710	Brass PVD	2.080
299	Matte Black	1.900	727	Brass Br. PVD	2.222
720	Nickel PVD	2.080	246	Gold PVD	2.360
706	Black Metal PVD	2.080	716	Gold Br. PVD	2.360
707	Black Metal Br. PVD	2.222	187	Aged Bronze	2.222
030	Copper PVD	2.080	713	Antique Brass	2.222
708	Copper Br. PVD	2.222	845	Dark Bronze	2.220
735	Warm Bronze PVD	2.080			



58006

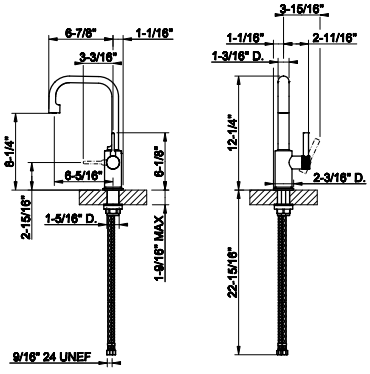

High basin mixer, flexible connections, without waste
- Max flow rate 1,2 GPM
- Height 12-1/4”
- Spout projection 6-5/16”
- Drain not included - See DRAINS section

031	Chrome	1.532	726	Warm Bronze Br. PVD	2.420
149	Finox Br. Nickel	2.070	710	Brass PVD	2.269
299	Matte Black	2.070	727	Brass Br. PVD	2.420
720	Nickel PVD	2.269	246	Gold PVD	2.572
706	Black Metal PVD	2.269	716	Gold Br. PVD	2.572
707	Black Metal Br. PVD	2.420	187	Aged Bronze	2.420
030	Copper PVD	2.269	713	Antique Brass	2.420
708	Copper Br. PVD	2.420	845	Dark Bronze	2.422
735	Warm Bronze PVD	2.269			



54197+58088

54197

Wall-mounted washbasin mixer rough valve
- Drain not included - See DRAINS section

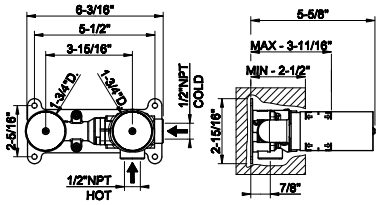



239	Steel Br.	809

58088

TRIM PARTS ONLY Wall-mounted wahbasin mixer trim, without waste
- Spout projection 8-5/8” - 7-13/16”
- Drain not included - See DRAINS section
- Requires in-wall rough valve 54197
- Max flow rate 1.2 GPM
- ADA compliant

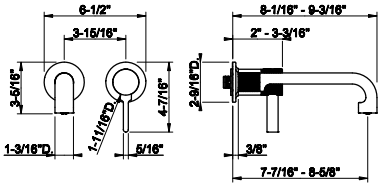

031	Chrome	1.170	726	Warm Bronze Br. PVD	1.850
149	Finox Br. Nickel	1.581	710	Brass PVD	1.732
299	Matte Black	1.581	727	Brass Br. PVD	1.850
720	Nickel PVD	1.732	246	Gold PVD	1.967
706	Black Metal PVD	1.732	716	Gold Br. PVD	1.967
707	Black Metal Br. PVD	1.850	187	Aged Bronze	1.850
030	Copper PVD	1.732	713	Antique Brass	1.850
708	Copper Br. PVD	1.850	845	Dark Bronze	1.850
735	Warm Bronze PVD	1.732			

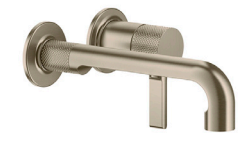

54197

Wall-mounted washbasin mixer rough valve
• Drain not included - See DRAINS section



54197+58089

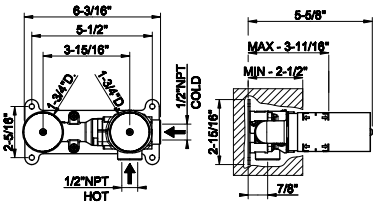

239	Steel Br.	809

58089

TRIM PARTS ONLY Wall-mounted wahbasin mixer trim, without waste
• Spout projection 10-3/8" - 9-10/16"
• Drain not included - See DRAINS section
• Requires in-wall rough valve 54197
• Max flow rate 1.2 GPM
• ADA compliant



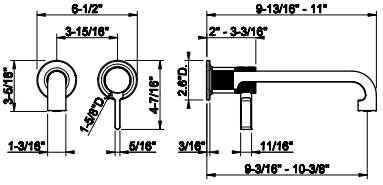

031	Chrome	1.206	726	Warm Bronze Br. PVD	1.904
149	Finox Br. Nickel	1.628	710	Brass PVD	1.783
299	Matte Black	1.628	727	Brass Br. PVD	1.904
720	Nickel PVD	1.783	246	Gold PVD	2.023
706	Black Metal PVD	1.783	716	Gold Br. PVD	2.023
707	Black Metal Br. PVD	1.904	187	Aged Bronze	1.904
030	Copper PVD	1.783	713	Antique Brass	1.904
708	Copper Br. PVD	1.904	845	Dark Bronze	1.904
735	Warm Bronze PVD	1.783			

58100

Wall-mounted spout only
• 1/2" connections with separate control (not included)
• Spout projection 8-1/4"
• Drain not included -See DRAINS section
• Requires mixer control 58109 + 53112
• Max flow rate 1.2 GPM



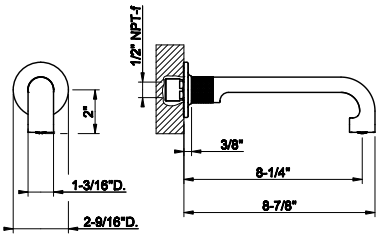

031	Chrome	578	726	Warm Bronze Br. PVD	911
149	Finox Br. Nickel	779	710	Brass PVD	854
299	Matte Black	779	727	Brass Br. PVD	911
720	Nickel PVD	854	246	Gold PVD	969
706	Black Metal PVD	854	716	Gold Br. PVD	969
707	Black Metal Br. PVD	911	187	Aged Bronze	911
030	Copper PVD	854	713	Antique Brass	911
708	Copper Br. PVD	911	845	Dark Bronze	911
735	Warm Bronze PVD	854			

58101

Wall-mounted spout only
• 1/2" connections with separate control (not included)
• Spout projection 10-1/16"
• Drain not included- See DRAINS section
• Requires mixer control 58109 + 53112
• Max flow rate 1.2 GPM



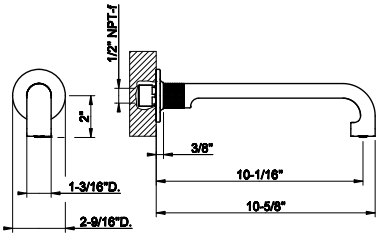

031	Chrome	587	726	Warm Bronze Br. PVD	929
149	Finox Br. Nickel	793	710	Brass PVD	870
299	Matte Black	793	727	Brass Br. PVD	929
720	Nickel PVD	870	246	Gold PVD	986
706	Black Metal PVD	870	716	Gold Br. PVD	986
707	Black Metal Br. PVD	929	187	Aged Bronze	929
030	Copper PVD	870	713	Antique Brass	929
708	Copper Br. PVD	929	845	Dark Bronze	929
735	Warm Bronze PVD	870			

53112+58109

53112

Wall-mounted Basin/bath mixer rough valve. One exit

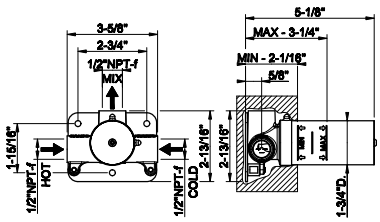



239	Steel Br.	449

58109

TTRIM PARTS ONLY Wall mounted mixer control with Ø35 cartridge

- For basin and bath spouts
- 1/2” connections
- Drain not included- see DRAINS section
- Requires in-wall rough valve 53112
- ADA compliant

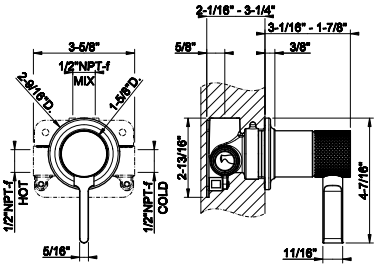



031	Chrome	497	726	Warm Bronze Br. PVD	785
149	Finox Br. Nickel	672	710	Brass PVD	735
299	Matte Black	672	727	Brass Br. PVD	785
720	Nickel PVD	735	246	Gold PVD	834
706	Black Metal PVD	735	716	Gold Br. PVD	834
707	Black Metal Br. PVD	785	187	Aged Bronze	785
030	Copper PVD	735	713	Antique Brass	785
708	Copper Br. PVD	785	845	Dark Bronze	785
735	Warm Bronze PVD	735			

58199

Ceiling-mounted washbasin spout only

- Spout length 63”
- Drain not included - See DRAINS section
- Requires mixer control 58200, 58018, 58019 + 44679 or 58109 + 54055
- Max flow rate 1.2 GPM

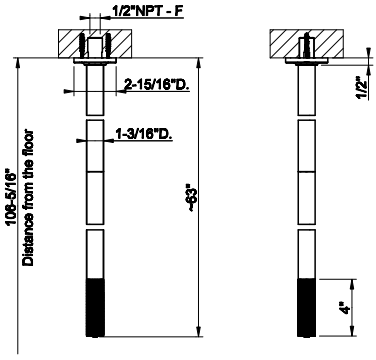



031	Chrome	2.337	726	Warm Bronze Br. PVD	3.693
149	Finox Br. Nickel	3.155	710	Brass PVD	3.459
299	Matte Black	3.155	727	Brass Br. PVD	3.693
720	Nickel PVD	3.459	246	Gold PVD	3.925
706	Black Metal PVD	3.459	716	Gold Br. PVD	3.925
707	Black Metal Br. PVD	3.693	187	Aged Bronze	3.693
030	Copper PVD	3.459	713	Antique Brass	3.693
708	Copper Br. PVD	3.693	845	Dark Bronze	3.693
735	Warm Bronze PVD	3.459			



58299

Ceiling-mounted washbasin spout only
- Spout length (MIN 5-15/16" - MAX 74-13/16")
- Drain not included - See DRAINS section
- Requires mixer control 58200, 58018, 58019 + 44679 or 58109 + 54055
- Max flow rate 1.2 GPM

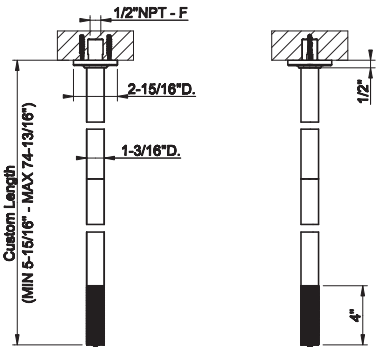

031	Chrome	3.387	726	Warm Bronze Br. PVD	5.350
149	Finox Br. Nickel	4.572	710	Brass PVD	5.012
299	Matte Black	4.572	727	Brass Br. PVD	5.350
720	Nickel PVD	5.012	246	Gold PVD	5.690
706	Black Metal PVD	5.012	716	Gold Br. PVD	5.690
707	Black Metal Br. PVD	5.350	187	Aged Bronze	5.350
030	Copper PVD	5.012	713	Antique Brass	5.350
708	Copper Br. PVD	5.350	845	Dark Bronze	5.350
735	Warm Bronze PVD	5.012			

58093

Medium basin spout



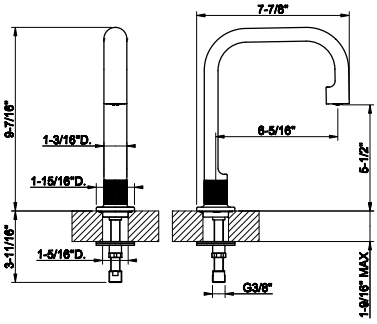

031	Chrome	1.150	726	Warm Bronze Br. PVD	1.820
149	Finox Br. Nickel	1.555	710	Brass PVD	1.705
299	Matte Black	1.555	727	Brass Br. PVD	1.820
720	Nickel PVD	1.705	246	Gold PVD	1.935
706	Black Metal PVD	1.705	716	Gold Br. PVD	1.935
707	Black Metal Br. PVD	1.820	187	Aged Bronze	1.820
030	Copper PVD	1.705	713	Antique Brass	1.820
708	Copper Br. PVD	1.820	845	Dark Bronze	1.817
735	Warm Bronze PVD	1.705			

58200

Deck-mounted washbasin mixer control
- Drain not included - See DRAINS section
- ADA compliant



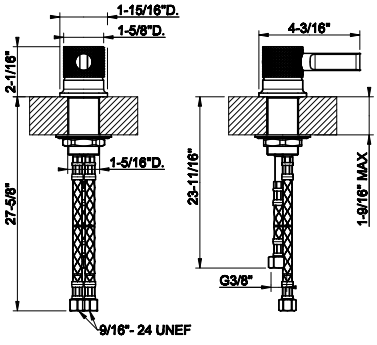

031	Chrome	700	726	Warm Bronze Br. PVD	1.103
149	Finox Br. Nickel	943	710	Brass PVD	1.034
299	Matte Black	943	727	Brass Br. PVD	1.103
720	Nickel PVD	1.034	246	Gold PVD	1.176
706	Black Metal PVD	1.034	716	Gold Br. PVD	1.176
707	Black Metal Br. PVD	1.103	187	Aged Bronze	1.103
030	Copper PVD	1.034	713	Antique Brass	1.103
708	Copper Br. PVD	1.103	845	Dark Bronze	1.103
735	Warm Bronze PVD	1.034			

58007

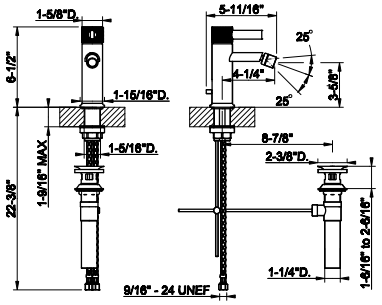

Single lever bidet mixer with pop-up assembly
- Spout projection 4-1/4”
- Height 6-1/2”
- 1-1/4” D. pop-up drain and flexible hoses with 9/16” – 24 UNEF connections.
- ADA compliant

031	Chrome	1.377	726	Warm Bronze Br. PVD	2.176
149	Finox Br. Nickel	1.859	710	Brass PVD	2.037
299	Matte Black	1.859	727	Brass Br. PVD	2.176
720	Nickel PVD	2.037	246	Gold PVD	2.313
706	Black Metal PVD	2.037	716	Gold Br. PVD	2.313
707	Black Metal Br. PVD	2.176	187	Aged Bronze	2.176
030	Copper PVD	2.037	713	Antique Brass	2.176
708	Copper Br. PVD	2.176	845	Dark Bronze	2.176
735	Warm Bronze PVD	2.037			



58103

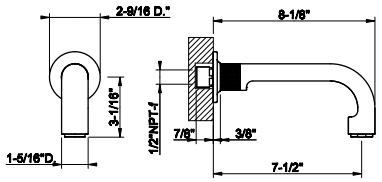

Wall mounted Bath spout only
- 1/2’ connections with separate control (not included)
- Spout projection 7-1/2”
- Drain not included- See DRAINS section
- Requires mixer control
- Flow rate 6.4 GPM at 60 PSI

031	Chrome	619	726	Warm Bronze Br. PVD	979
149	Finox Br. Nickel	837	710	Brass PVD	916
299	Matte Black	837	727	Brass Br. PVD	979
720	Nickel PVD	916	246	Gold PVD	1.040
706	Black Metal PVD	916	716	Gold Br. PVD	1.040
707	Black Metal Br. PVD	979	187	Aged Bronze	979
030	Copper PVD	916	713	Antique Brass	979
708	Copper Br. PVD	979	845	Dark Bronze	979
735	Warm Bronze PVD	916			



65099

Floor-mounted tub filler in-floor rough valve



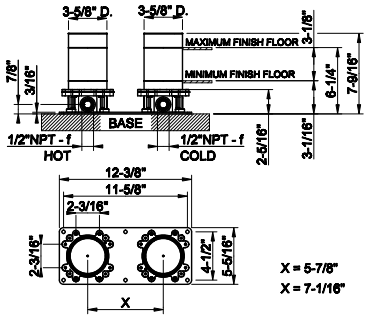

031	Chrome	1.585

65099+58029

58029

TRIM PARTS ONLY Floor-mounted tub filler
- Handshower
- 59” flex hose
- Diverter
- Spout projection 9-5/8”
- Requires in-floor roughvalve 65099
- Handshower max flow rate 1.75 GPM
- Spout mixed flow rate 6 GPM at 60 PSI



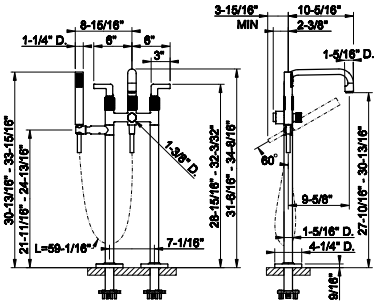

031	Chrome	5.017	726	Warm Bronze Br. PVD	7.926
149	Finox Br. Nickel	6.773	710	Brass PVD	7.424
299	Matte Black	6.773	727	Brass Br. PVD	7.926
720	Nickel PVD	7.424	246	Gold PVD	8.427
706	Black Metal PVD	7.424	716	Gold Br. PVD	8.427
707	Black Metal Br. PVD	7.926	187	Aged Bronze	7.926
030	Copper PVD	7.424	713	Antique Brass	7.926
708	Copper Br. PVD	7.926	845	Dark Bronze	7.926
735	Warm Bronze PVD	7.424			

58040

Five-hole roman tub set
- Separate Hot/Cold
- Diverter
- Spout projection 7-9/16”
- Height 3-1/8”
- 59” flexible hose and pull-outantilimestone handshower.
- Handshower Max flow rate 1.75 GPM
- Spout mixed flow rate 12 GPM at 60 PSI



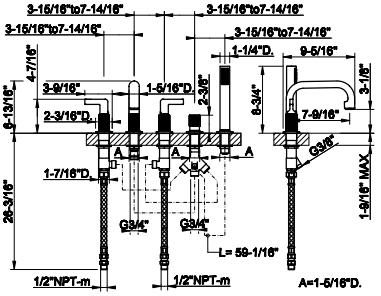

031	Chrome	4.074	726	Warm Bronze Br. PVD	6.436
149	Finox Br. Nickel	5.500	710	Brass PVD	6.029
299	Matte Black	5.500	727	Brass Br. PVD	6.436
720	Nickel PVD	6.029	246	Gold PVD	6.843
706	Black Metal PVD	6.029	716	Gold Br. PVD	6.843
707	Black Metal Br. PVD	6.436	187	Aged Bronze	6.436
030	Copper PVD	6.029	713	Antique Brass	6.436
708	Copper Br. PVD	6.436	845	Dark Bronze	6.436
735	Warm Bronze PVD	6.029			

58043

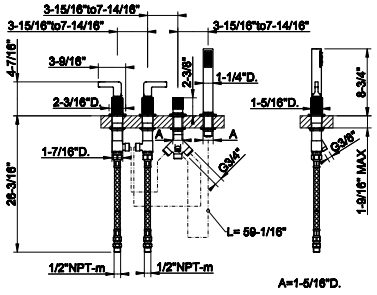

Four-hole roman tub set to be used with overflow filler
- Separate Hot/Cold
- Diverter
- 59" flexible hose and pull-out antilimestone handshower.
- Handshower Max flow rate 1.75 GPM

031	Chrome	3.303	726	Warm Bronze Br. PVD	5.219
149	Finox Br. Nickel	4.459	710	Brass PVD	4.890
299	Matte Black	4.459	727	Brass Br. PVD	5.219
720	Nickel PVD	4.890	246	Gold PVD	5.550
706	Black Metal PVD	4.890	716	Gold Br. PVD	5.550
707	Black Metal Br. PVD	5.219	187	Aged Bronze	5.219
030	Copper PVD	4.890	713	Antique Brass	5.219
708	Copper Br. PVD	5.219	845	Dark Bronze	5.219
735	Warm Bronze PVD	4.890			



09279+58132

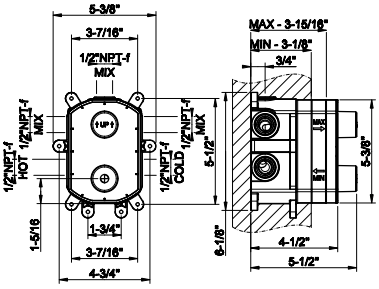

09279

In-wall thermostatic rough valve for 1/2/3-way diverter function
- 1/2" connections
- Vertical application
- Anti-scalding
- Non-Shared function

031	Chrome	877

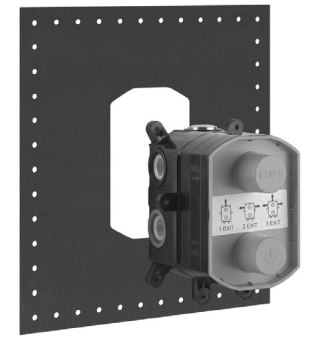

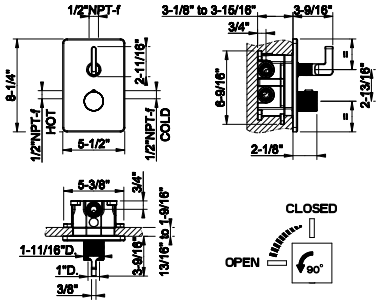

58132

TRIM PARTS ONLY External parts for thermostatic with single volume control
- Single backplate
- 1/2" connections
- Vertical application
- Anti-scalding
- Requires in-wall rough valve 09279

031	Chrome	1.854	726	Warm Bronze Br. PVD	2.928
149	Finox Br. Nickel	2.502	710	Brass PVD	2.743
299	Matte Black	2.502	727	Brass Br. PVD	2.928
720	Nickel PVD	2.743	246	Gold PVD	3.114
706	Black Metal PVD	2.743	716	Gold Br. PVD	3.114
707	Black Metal Br. PVD	2.928	845	Dark Bronze	2.928
030	Copper PVD	2.743	187	Aged Bronze	2.928
708	Copper Br. PVD	2.928	713	Antique Brass	2.928
735	Warm Bronze PVD	2.743			



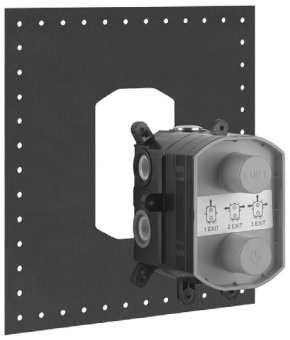

09279

In-wall thermostatic rough valve for 1/2/3-way diverter function
- 1/2” connections
- Vertical application
- Anti-scalding
- Non-Shared function

031	Chrome	877

09279+58134

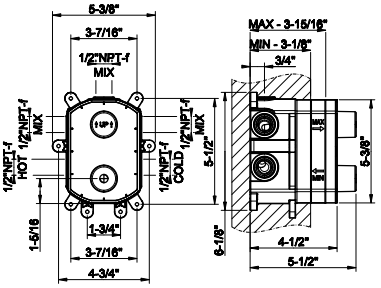



58134

TRIM PARTS ONLY External parts for 2-way thermostatic diverter and volume control
- Single backplate
- 1/2” connections
- Verticala pplication
- Anti-scalding
- Requires in-wall rough valve 09279

031	Chrome	1.854	726	Warm Bronze Br. PVD	2.928
149	Finox Br. Nickel	2.502	710	Brass PVD	2.743
299	Matte Black	2.502	727	Brass Br. PVD	2.928
720	Nickel PVD	2.743	246	Gold PVD	3.114
706	Black Metal PVD	2.743	716	Gold Br. PVD	3.114
707	Black Metal Br. PVD	2.928	845	Dark Bronze	2.928
030	Copper PVD	2.743	187	Aged Bronze	2.928
708	Copper Br. PVD	2.928	713	Antique Brass	2.928
735	Warm Bronze PVD	2.743			

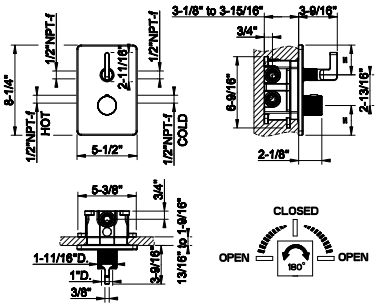

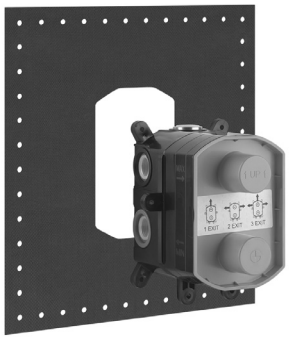

09279

In-wall thermostatic rough valve for 1/2/3-way diverter function
- 1/2” connections
- Vertical application
- Anti-scalding
- Non-Shared function

031	Chrome	877

09279+58136

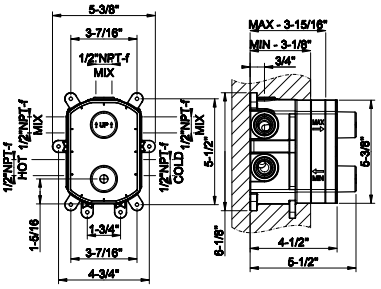



58136

TRIM PARTS ONLY External parts for 3-way thermostatic diverter and volume control
- Single backplate
- 1/2” connections
- Verticalapplication
- Anti-scalding
- Requires in-wall rough valve 09279

031	Chrome	1.854	726	Warm Bronze Br. PVD	2.928
149	Finox Br. Nickel	2.502	710	Brass PVD	2.743
299	Matte Black	2.502	727	Brass Br. PVD	2.928
720	Nickel PVD	2.743	246	Gold PVD	3.114
706	Black Metal PVD	2.743	716	Gold Br. PVD	3.114
707	Black Metal Br. PVD	2.928	845	Dark Bronze	2.928
030	Copper PVD	2.743	187	Aged Bronze	2.928
708	Copper Br. PVD	2.928	713	Antique Brass	2.928
735	Warm Bronze PVD	2.743			

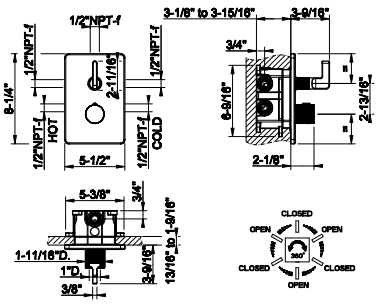

09272+58173

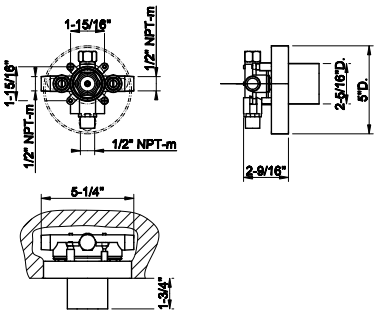

09272

In-wall single exit pressure balance rough valve
- 1/2” connections



031	Chrome	371

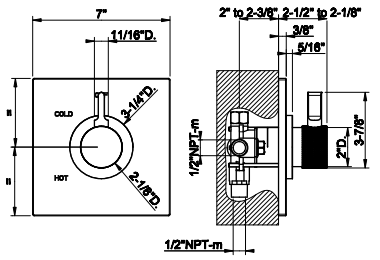

58173

TRIM PARTS ONLY External parts for single exit pressure balance
- Single backplate
- 1/2” connections
- Requires in-wall rough valve 09272
- ADA compliant



031	Chrome	736	726	Warm Bronze Br. PVD	1.164
149	Finox Br. Nickel	995	710	Brass PVD	1.090
299	Matte Black	995	727	Brass Br. PVD	1.164
720	Nickel PVD	1.090	246	Gold PVD	1.237
706	Black Metal PVD	1.090	716	Gold Br. PVD	1.237
707	Black Metal Br. PVD	1.164	845	Dark Bronze	1.164
030	Copper PVD	1.090	187	Aged Bronze	1.164
708	Copper Br. PVD	1.164	713	Antique Brass	1.164
735	Warm Bronze PVD	1.090			

09274+58174

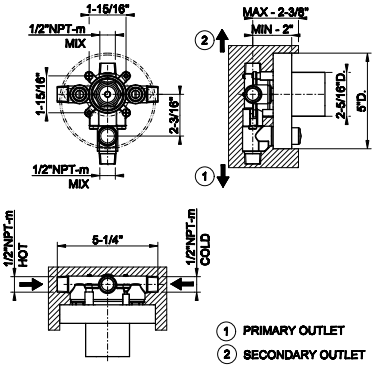

09274

In-wall pressure balance rough valve with 2-way diverter
- 1/2” connections
- Non-Shared Function



031	Chrome	443

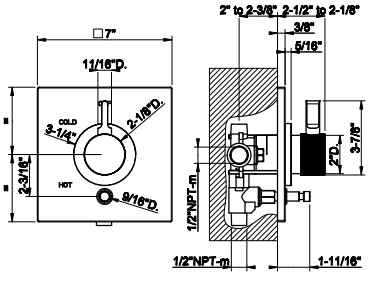

58174

TRIM PARTS ONLY External parts for pressure balance with 2-way diverter
- Single backplate
- 1/2” connections
- Requires in-wall rough valve 09274



031	Chrome	759	726	Warm Bronze Br. PVD	1.202
149	Finox Br. Nickel	1.026	710	Brass PVD	1.125
299	Matte Black	1.026	727	Brass Br. PVD	1.202
720	Nickel PVD	1.125	246	Gold PVD	1.277
706	Black Metal PVD	1.125	716	Gold Br. PVD	1.277
707	Black Metal Br. PVD	1.202	845	Dark Bronze	1.202
030	Copper PVD	1.125	187	Aged Bronze	1.202
708	Copper Br. PVD	1.202	713	Antique Brass	1.202
735	Warm Bronze PVD	1.125			

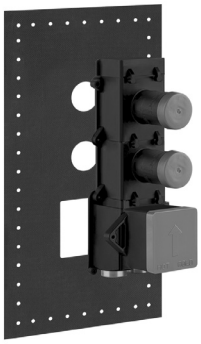

39693

In-wall thermostatic rough valve with 2 volume controls
- High capacity
- 3/4” connections
- Vertical/Horizontal application
- Anti-scalding

031	Chrome	1.903

39693+58204

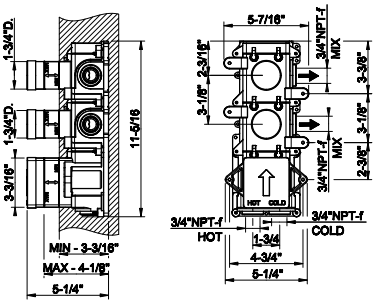

58204



TRIM PARTS ONLY External parts for thermostatic with 2 volume controls
- Single backplate
- High capacity
- 3/4” connections
- Vertical/Horizontal application
- Anti-scalding
- Requires in-wall rough valve 39693

031	Chrome	2.307	726	Warm Bronze Br. PVD	4.737
149	Finox Br. Nickel	4.047	710	Brass PVD	4.438
299	Matte Black	4.047	727	Brass Br. PVD	4.737
720	Nickel PVD	4.438	246	Gold PVD	5.037
706	Black Metal PVD	4.438	716	Gold Br. PVD	5.037
707	Black Metal Br. PVD	4.737	845	Dark Bronze	4.737
030	Copper PVD	4.438	187	Aged Bronze	4.737
708	Copper Br. PVD	4.737	713	Antique Brass	4.737
735	Warm Bronze PVD	4.438			

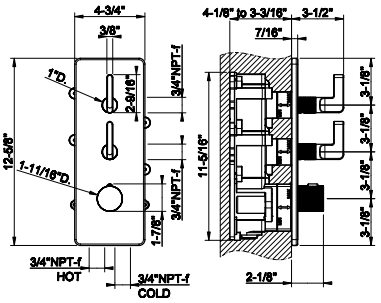

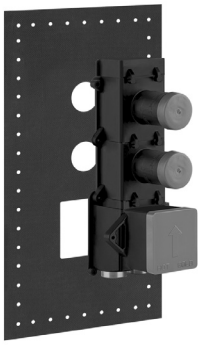

39693

In-wall thermostatic rough valve with 2 volume controls
- High capacity
- 3/4” connections
- Vertical/Horizontal application
- Anti-scalding

031	Chrome	1.903

39693+58214

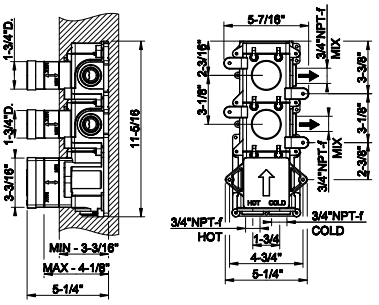

58214



TRIM PARTS ONLY External parts for thermostatic with 2 volume controls
- Separate backplate
- High capacity
- 3/4” connections
- Vertical/Horizontal application
- Anti-scalding
- Requires in-wall rough valve 39693

031	Chrome	2.307	726	Warm Bronze Br. PVD	4.737
149	Finox Br. Nickel	4.047	710	Brass PVD	4.438
299	Matte Black	4.047	727	Brass Br. PVD	4.737
720	Nickel PVD	4.438	246	Gold PVD	5.037
706	Black Metal PVD	4.438	716	Gold Br. PVD	5.037
707	Black Metal Br. PVD	4.737	845	Dark Bronze	4.737
030	Copper PVD	4.438	187	Aged Bronze	4.737
708	Copper Br. PVD	4.737	713	Antique Brass	4.737
735	Warm Bronze PVD	4.438			

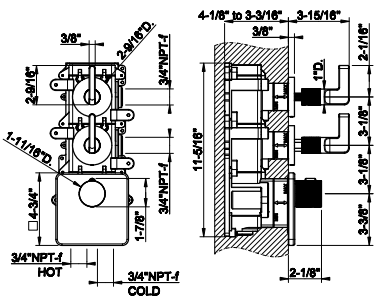

39695+58206

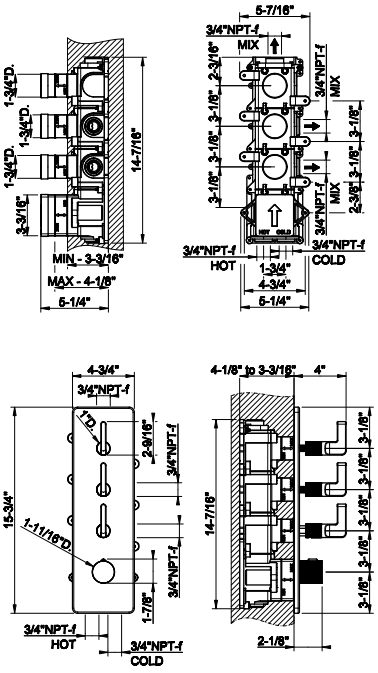

39695

In-wall thermostatic rough valve with 3 volume controls
- High capacity
- 3/4" connections
- Vertical/Horizontal application
- Anti-scalding

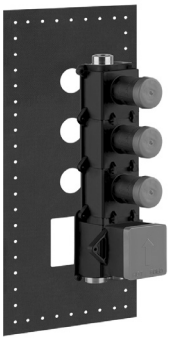

031	Chrome	2.197

58206

TRIM PARTS ONLY External parts for thermostatic with 3 volume controls
- Single backplate
- High capacity
- 3/4" connections
- Vertical/Horizontal application
- Anti-scalding
- Requires in-wall rough valve 39695



031	Chrome	2.433	726	Warm Bronze Br. PVD	5.449
149	Finox Br. Nickel	4.657	710	Brass PVD	5.104
299	Matte Black	4.657	727	Brass Br. PVD	5.449
720	Nickel PVD	5.104	246	Gold PVD	5.793
706	Black Metal PVD	5.104	716	Gold Br. PVD	5.793
707	Black Metal Br. PVD	5.449	845	Dark Bronze	5.449
030	Copper PVD	5.104	187	Aged Bronze	5.449
708	Copper Br. PVD	5.449	713	Antique Brass	5.449
735	Warm Bronze PVD	5.104			

39695+58216

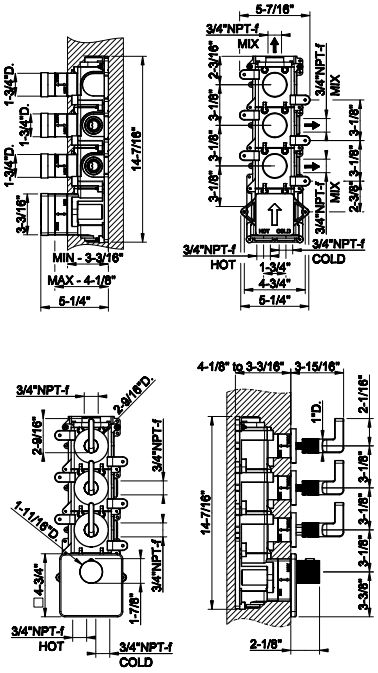

39695

In-wall thermostatic rough valve with 3 volume controls
- High capacity
- 3/4" connections
- Vertical/Horizontal application
- Anti-scalding

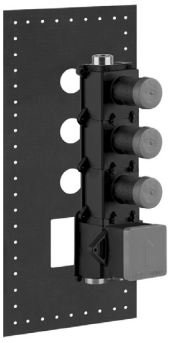

031	Chrome	2.197

58216

TRIM PARTS ONLY External parts for thermostatic with 3 volume controls
- Separate backplate
- High capacity
- 3/4" connections
- Vertical/Horizontal application
- Anti-scalding
- Requires in-wall rough valve 39695



031	Chrome	2.433	726	Warm Bronze Br. PVD	5.449
149	Finox Br. Nickel	4.657	710	Brass PVD	5.104
299	Matte Black	4.657	727	Brass Br. PVD	5.449
720	Nickel PVD	5.104	246	Gold PVD	5.793
706	Black Metal PVD	5.104	716	Gold Br. PVD	5.793
707	Black Metal Br. PVD	5.449	845	Dark Bronze	5.449
030	Copper PVD	5.104	187	Aged Bronze	5.449
708	Copper Br. PVD	5.449	713	Antique Brass	5.449
735	Warm Bronze PVD	5.104			

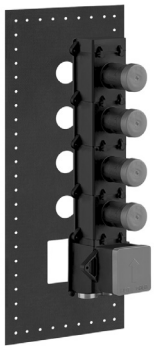

39699

In-wall thermostatic rough valve with 4 volume controls
- High capacity
- 3/4” connections
- Vertical/Horizontal application
- Anti-scalding
- Max flow rate 1.75 GPM

031	Chrome	2.498

39699+58208

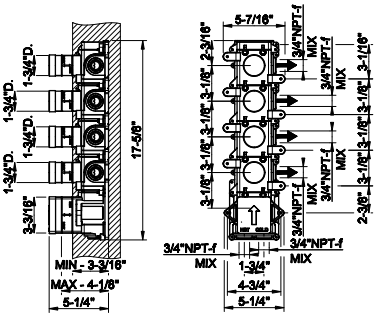



58208

TRIM PARTS ONLY External parts for thermostatic with 4 volume controls
- Single backplate
- High capacity
- 3/4” connections
- Vertical/Horizontal application
- Anti-scalding
- Requires in-wall rough valve 39699

031	Chrome	3.036	726	Warm Bronze Br. PVD	6.237
149	Finox Br. Nickel	5.330	710	Brass PVD	5.841
299	Matte Black	5.330	727	Brass Br. PVD	6.237
720	Nickel PVD	5.841	246	Gold PVD	6.630
706	Black Metal PVD	5.841	716	Gold Br. PVD	6.630
707	Black Metal Br. PVD	6.237	845	Dark Bronze	6.237
030	Copper PVD	5.841	187	Aged Bronze	6.237
708	Copper Br. PVD	6.237	713	Antique Brass	6.237
735	Warm Bronze PVD	5.841			

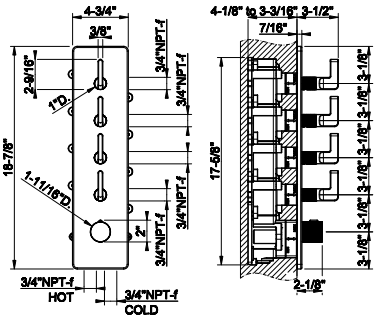

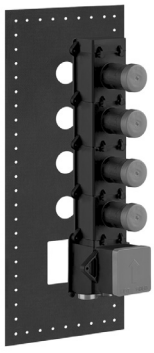

39699

In-wall thermostatic rough valve with 4 volume controls
- High capacity
- 3/4” connections
- Vertical/Horizontal application
- Anti-scalding
- Max flow rate 1.75 GPM

031	Chrome	2.498

39699+58218

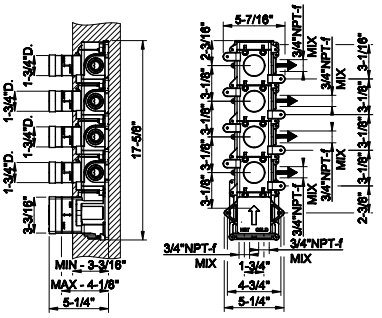



58218

TRIM PARTS ONLY External parts for thermostatic with 4 volume controls
- Separate backplate
- High capacity
- 3/4” connections
- Vertical/Horizontal application
- Anti-scalding
- Requires in-wall rough valve 39699

031	Chrome	3.036	726	Warm Bronze Br. PVD	6.237
149	Finox Br. Nickel	5.330	710	Brass PVD	5.841
299	Matte Black	5.330	727	Brass Br. PVD	6.237
720	Nickel PVD	5.841	246	Gold PVD	6.630
706	Black Metal PVD	5.841	716	Gold Br. PVD	6.630
707	Black Metal Br. PVD	6.237	845	Dark Bronze	6.237
030	Copper PVD	5.841	187	Aged Bronze	6.237
708	Copper Br. PVD	6.237	713	Antique Brass	6.237
735	Warm Bronze PVD	5.841			

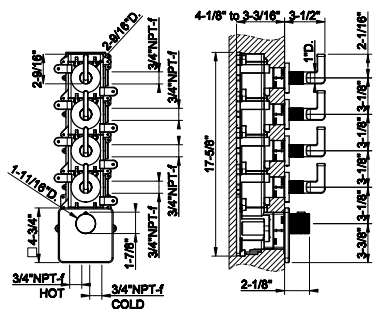

39681+58254

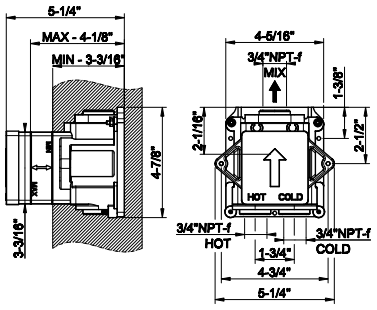

39681

In-wall thermostatic rough valve for individual mixer
- High capacity
- 3/4" connections
- Vertical/Horizontal application
- Anti-scalding

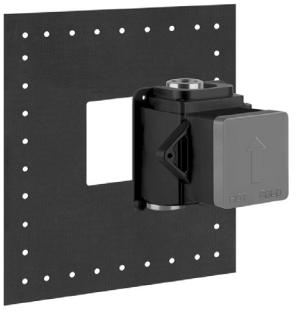

031	Chrome	1.169

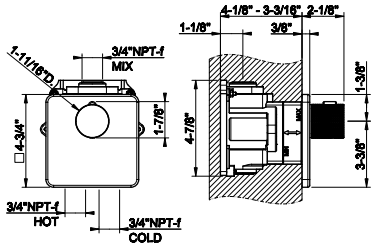

58254

TRIM PARTS ONLY External parts for individual thermostatic mixer
- High capacity
- 3/4" connections
- Vertical/Horizontal application
- Anti-scalding
- Requires in-wall rough valve 39681



031	Chrome	1.023	726	Warm Bronze Br. PVD	2.227
149	Finox Br. Nickel	1.901	710	Brass PVD	2.085
299	Matte Black	1.901	727	Brass Br. PVD	2.227
720	Nickel PVD	2.085	246	Gold PVD	2.366
706	Black Metal PVD	2.085	716	Gold Br. PVD	2.366
707	Black Metal Br. PVD	2.227	845	Dark Bronze	2.227
030	Copper PVD	2.085	187	Aged Bronze	2.227
708	Copper Br. PVD	2.227	713	Antique Brass	2.227
735	Warm Bronze PVD	2.085			

39683+58263

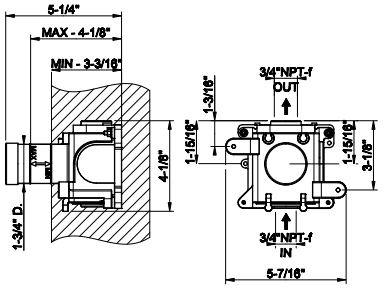

39683

In-wall thermostatic rough valve parts for volume control
- High capacity
- 3/4" connections
- Vertical/Horizontal application
- Anti-scalding

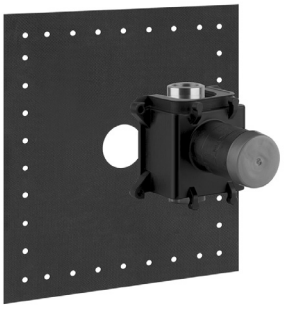

031	Chrome	582

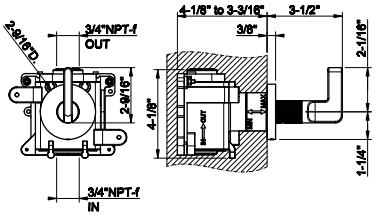

58263

TRIM PARTS ONLY External parts for individual thermostatic volume control
- High capacity
- 3/4" connections
- Vertical/Horizontalapplication
- Anti-scalding
- Requires in-wall rough valve 39683
- ADA compliant



031	Chrome	619	726	Warm Bronze Br. PVD	1.390
149	Finox Br. Nickel	1.186	710	Brass PVD	1.301
299	Matte Black	1.186	727	Brass Br. PVD	1.390
720	Nickel PVD	1.301	246	Gold PVD	1.477
706	Black Metal PVD	1.301	716	Gold Br. PVD	1.477
707	Black Metal Br. PVD	1.390	845	Dark Bronze	1.390
030	Copper PVD	1.301	187	Aged Bronze	1.390
708	Copper Br. PVD	1.390	713	Antique Brass	1.390
735	Warm Bronze PVD	1.301			


GESSI
INCISO

58111



Widespread washbasin mixer with pop-up assembly
- Spout projection 5-1/2”
- Height 5-11/16”
- 1-1/4” D. pop-up drain and flexiblehoses with 9/16” – 24 UNEF connections.
- Max flow rate 1.2 GPM
- ADA compliant

031	Chrome	2.222	726	Warm Bronze Br. PVD	3.511
149	Finox Br. Nickel	3.001	710	Brass PVD	3.288
299	Matte Black	3.001	727	Brass Br. PVD	3.511
720	Nickel PVD	3.288	246	Gold PVD	3.735
706	Black Metal PVD	3.288	716	Gold Br. PVD	3.735
707	Black Metal Br. PVD	3.511	845	Dark Bronze	3.511
030	Copper PVD	3.288	187	Aged Bronze	3.511
708	Copper Br. PVD	3.511	713	Antique Brass	3.511
735	Warm Bronze PVD	3.288			

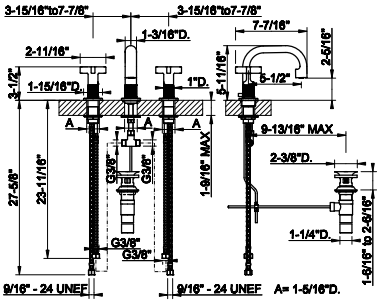

58112



Widespread washbasin mixer without pop-up assembly
- Spout projection 5-1/2”
- Height 5-11/16”
- Drain not included - See DRAINSsection
- Max flow rate 1.2 GPM
- ADA compliant

031	Chrome	2.181	726	Warm Bronze Br. PVD	3.446
149	Finox Br. Nickel	2.943	710	Brass PVD	3.229
299	Matte Black	2.943	727	Brass Br. PVD	3.446
720	Nickel PVD	3.229	246	Gold PVD	3.666
706	Black Metal PVD	3.229	716	Gold Br. PVD	3.666
707	Black Metal Br. PVD	3.446	845	Dark Bronze	3.446
030	Copper PVD	3.229	187	Aged Bronze	3.446
708	Copper Br. PVD	3.446	713	Antique Brass	3.446
735	Warm Bronze PVD	3.229			

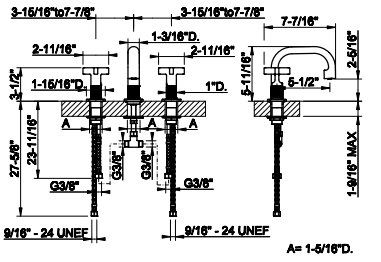

58113



Widespread washbasin mixer with pop-up assembly
- Spout projection 6-5/16”
- Height 9-7/16”
- 1-1/4” D. pop-up drain and flexiblehoses with 9/16” – 24 UNEF connections.
- Max flow rate 1.2 GPM
- ADA compliant

031	Chrome	2.222	726	Warm Bronze Br. PVD	3.511
149	Finox Br. Nickel	3.001	710	Brass PVD	3.288
299	Matte Black	3.001	727	Brass Br. PVD	3.511
720	Nickel PVD	3.288	246	Gold PVD	3.735
706	Black Metal PVD	3.288	716	Gold Br. PVD	3.735
707	Black Metal Br. PVD	3.511	845	Dark Bronze	3.511
030	Copper PVD	3.288	187	Aged Bronze	3.511
708	Copper Br. PVD	3.511	713	Antique Brass	3.511
735	Warm Bronze PVD	3.288			

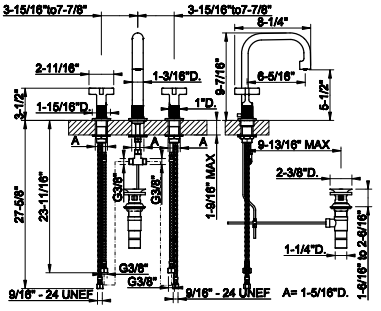

58114



Widespread washbasin mixer without pop-up assembly
- Spout projection 6-5/16”
- Height 9-7/16”
- Drain not included - See DRAINSsection
- Max flow rate 1.2 GPM
- ADA compliant

031	Chrome	2.181	726	Warm Bronze Br. PVD	3.446
149	Finox Br. Nickel	2.943	710	Brass PVD	3.229
299	Matte Black	2.943	727	Brass Br. PVD	3.446
720	Nickel PVD	3.229	246	Gold PVD	3.666
706	Black Metal PVD	3.229	716	Gold Br. PVD	3.666
707	Black Metal Br. PVD	3.446	845	Dark Bronze	3.446
030	Copper PVD	3.229	187	Aged Bronze	3.446
708	Copper Br. PVD	3.446	713	Antique Brass	3.446
735	Warm Bronze PVD	3.229			

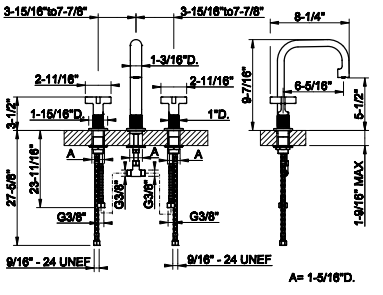

48089+58190

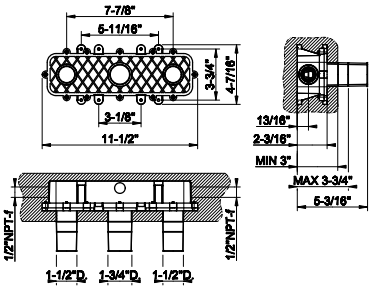

48089

Wall-mounted washbasin mixer rough valve
• Drain not included - See DRAINS section

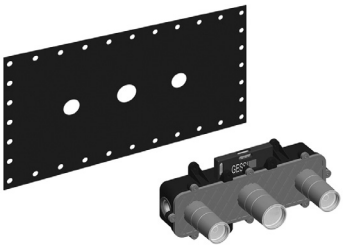

031	Chrome	1.069

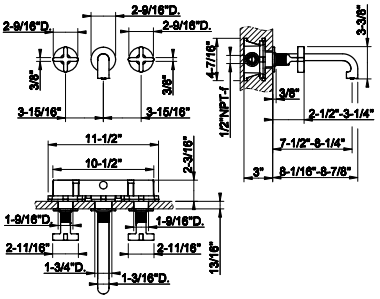

58190

TRIM PARTS ONLY Wall-mounted wahbasin mixer trim, without waste
• Spout projection 7-1/2" - 8-1/4"
• Drain not included - See DRAINS section
• Requires in-wall rough valve 48089
• Max flow rate 1.2 GPM
• ADA compliant

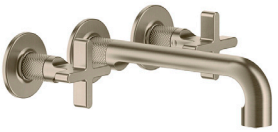

031	Chrome	1.655	726	Warm Bronze Br. PVD	2.616
149	Finox Br. Nickel	2.235	710	Brass PVD	2.450
299	Matte Black	2.235	727	Brass Br. PVD	2.616
720	Nickel PVD	2.450	246	Gold PVD	2.780
706	Black Metal PVD	2.450	716	Gold Br. PVD	2.780
707	Black Metal Br. PVD	2.616	845	Dark Bronze	2.616
030	Copper PVD	2.450	187	Aged Bronze	2.616
708	Copper Br. PVD	2.616	713	Antique Brass	2.616
735	Warm Bronze PVD	2.450			

48089+58192

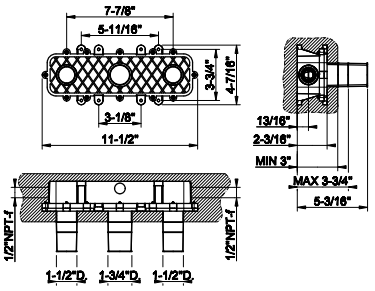

48089

Wall-mounted washbasin mixer rough valve
• Drain not included - See DRAINS section

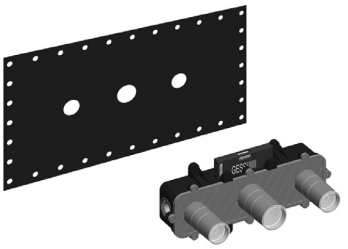

031	Chrome	1.069

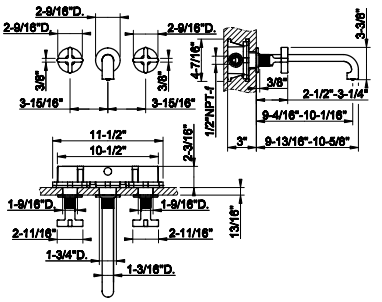

58192

TRIM PARTS ONLY Wall-mounted wahbasin mixer trim, without waste
• Spout projection 9-4/16" - 10-1/16"
• Drain not included - See DRAINS section
• Requires in-wall rough valve 48089
• Max flow rate 1.2 GPM
• ADA compliant

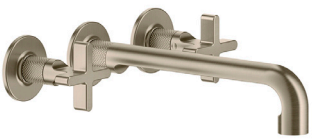

031	Chrome	1.690	726	Warm Bronze Br. PVD	2.671
149	Finox Br. Nickel	2.282	710	Brass PVD	2.501
299	Matte Black	2.282	727	Brass Br. PVD	2.671
720	Nickel PVD	2.501	246	Gold PVD	2.840
706	Black Metal PVD	2.501	716	Gold Br. PVD	2.840
707	Black Metal Br. PVD	2.671	845	Dark Bronze	2.671
030	Copper PVD	2.501	187	Aged Bronze	2.671
708	Copper Br. PVD	2.671	713	Antique Brass	2.671
735	Warm Bronze PVD	2.501			

65099

Floor-mounted tub filler in-floor rough valve



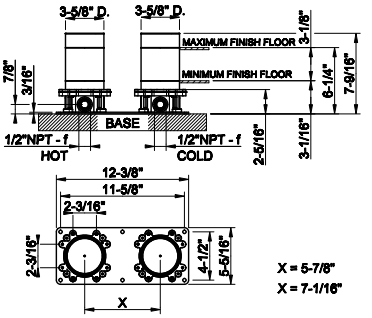

031	Chrome	1.585

58129

TRIM PARTS ONLY Floor-mounted tub filler
- Handshower
- 59” flex hose
- Diverter
- Spout projection 9-5/8”
- Requires in-floor roughvalve 65099
- Handshower max flow rate 1.75 GPM
- Spout mixed flow rate 6 GPM at 60 PSI



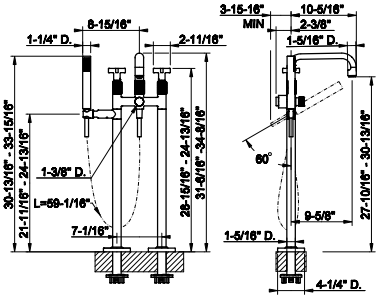

031	Chrome	5.138	726	Warm Bronze Br. PVD	8.117
149	Finox Br. Nickel	6.935	710	Brass PVD	7.603
299	Matte Black	6.935	727	Brass Br. PVD	8.117
720	Nickel PVD	7.603	246	Gold PVD	8.630
706	Black Metal PVD	7.603	716	Gold Br. PVD	8.630
707	Black Metal Br. PVD	8.117	845	Dark Bronze	8.117
030	Copper PVD	7.603	187	Aged Bronze	8.117
708	Copper Br. PVD	8.117	713	Antique Brass	8.117
735	Warm Bronze PVD	7.603			

58140

Five-hole roman tub set
- Separate Hot/Cold
- Diverter
- Spout projection 7-9/16”
- Height 3-1/8”
- 59” flexible hose and pull-outantilimestone handshower.
- Handshower Max flow rate 1.75 GPM
- Spout mixed flow rate 12 GPM at 60 PSI



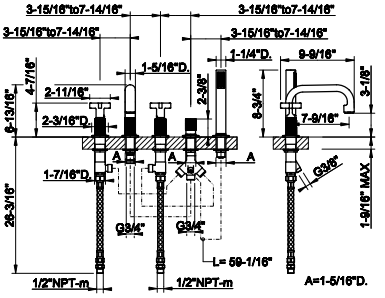

031	Chrome	4.204	726	Warm Bronze Br. PVD	6.642
149	Finox Br. Nickel	5.676	710	Brass PVD	6.222
299	Matte Black	5.676	727	Brass Br. PVD	6.642
720	Nickel PVD	6.222	246	Gold PVD	7.064
706	Black Metal PVD	6.222	716	Gold Br. PVD	7.064
707	Black Metal Br. PVD	6.642	845	Dark Bronze	6.642
030	Copper PVD	6.222	187	Aged Bronze	6.642
708	Copper Br. PVD	6.642	713	Antique Brass	6.642
735	Warm Bronze PVD	6.222			

58143

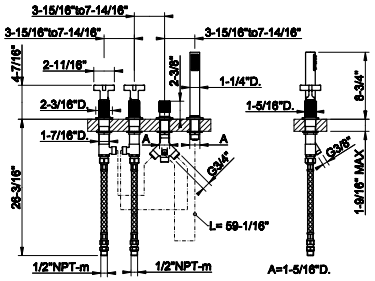

Four-hole roman tub set
- Separate Hot/Cold
- Diverter
- 59” flexible hose and pull-out antilimestone handshower.
- Handshower Maxflow rate 1.75 GPM

031	Chrome	3.434	726	Warm Bronze Br. PVD	5.426
149	Finox Br. Nickel	4.637	710	Brass PVD	5.082
299	Matte Black	4.637	727	Brass Br. PVD	5.426
720	Nickel PVD	5.082	246	Gold PVD	5.770
706	Black Metal PVD	5.082	716	Gold Br. PVD	5.770
707	Black Metal Br. PVD	5.426	845	Dark Bronze	5.426
030	Copper PVD	5.082	187	Aged Bronze	5.426
708	Copper Br. PVD	5.426	713	Antique Brass	5.426
735	Warm Bronze PVD	5.082			



09279+58232

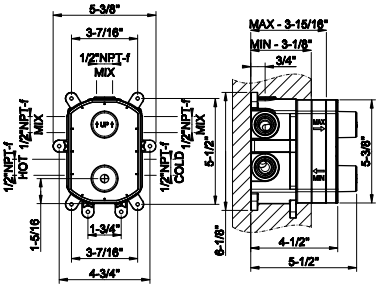

09279

In-wall thermostatic rough valve for 1/2/3-way diverter function
- 1/2” connections
- Vertical application
- Anti-scalding
- Non-Shared function

031	Chrome	877

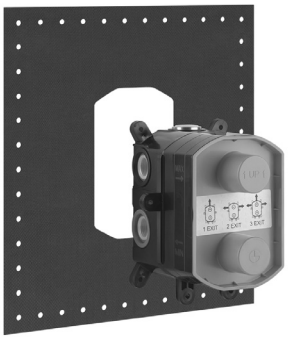

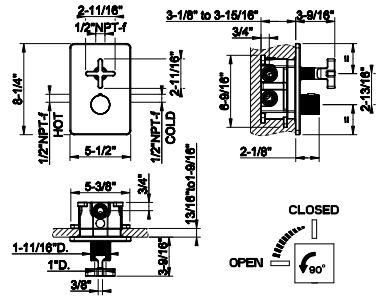

58232

TRIM PARTS ONLY External parts for thermostatic with single volume control
- Single backplate
- 1/2” connections
- Vertical application
- Anti-scalding
- Requires in-wall rough valve 09279

031	Chrome	1.854	726	Warm Bronze Br. PVD	2.928
149	Finox Br. Nickel	2.502	710	Brass PVD	2.743
299	Matte Black	2.502	727	Brass Br. PVD	2.928
720	Nickel PVD	2.743	246	Gold PVD	3.114
706	Black Metal PVD	2.743	716	Gold Br. PVD	3.114
707	Black Metal Br. PVD	2.928	845	Dark Bronze	2.928
030	Copper PVD	2.743	187	Aged Bronze	2.928
708	Copper Br. PVD	2.928	713	Antique Brass	2.928
735	Warm Bronze PVD	2.743			



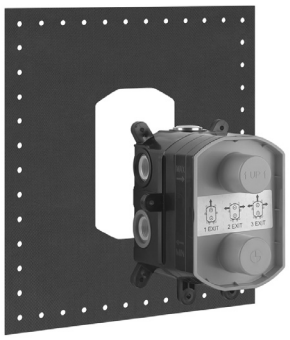

09279

In-wall thermostatic rough valve for 1/2/3-way diverter function
- 1/2” connections
- Vertical application
- Anti-scalding
- Non-Shared function

031	Chrome	877

09279+58234

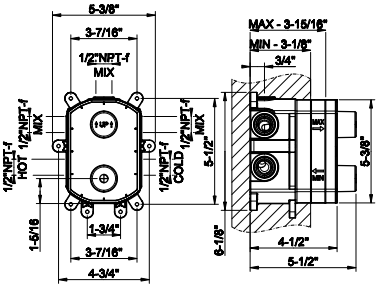



58234

TRIM PARTS ONLY External parts for 2-way thermostatic diverter and volume control
- Single backplate
- 1/2” connections
- Verticala pplication
- Anti-scalding
- Requires in-wall rough valve 09279

031	Chrome	1.854	726	Warm Bronze Br. PVD	2.928
149	Finox Br. Nickel	2.502	710	Brass PVD	2.743
299	Matte Black	2.502	727	Brass Br. PVD	2.928
720	Nickel PVD	2.743	246	Gold PVD	3.114
706	Black Metal PVD	2.743	716	Gold Br. PVD	3.114
707	Black Metal Br. PVD	2.928	845	Dark Bronze	2.928
030	Copper PVD	2.743	187	Aged Bronze	2.928
708	Copper Br. PVD	2.928	713	Antique Brass	2.928
735	Warm Bronze PVD	2.743			

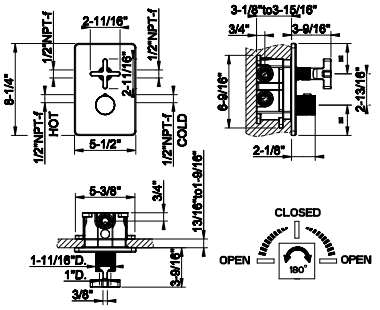

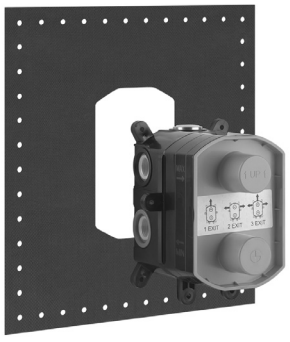

09279

In-wall thermostatic rough valve for 1/2/3-way diverter function
- 1/2” connections
- Vertical application
- Anti-scalding
- Non-Shared function

031	Chrome	877

09279+58236

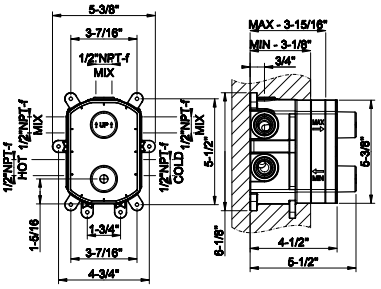



58236

TRIM PARTS ONLY External parts for 3-way thermostatic diverter and volume control
- Single backplate
- 1/2” connections
- Verticalapplication
- Anti-scalding
- Requires in-wall rough valve 09279

031	Chrome	1.854	726	Warm Bronze Br. PVD	2.928
149	Finox Br. Nickel	2.502	710	Brass PVD	2.743
299	Matte Black	2.502	727	Brass Br. PVD	2.928
720	Nickel PVD	2.743	246	Gold PVD	3.114
706	Black Metal PVD	2.743	716	Gold Br. PVD	3.114
707	Black Metal Br. PVD	2.928	845	Dark Bronze	2.928
030	Copper PVD	2.743	187	Aged Bronze	2.928
708	Copper Br. PVD	2.928	713	Antique Brass	2.928
735	Warm Bronze PVD	2.743			

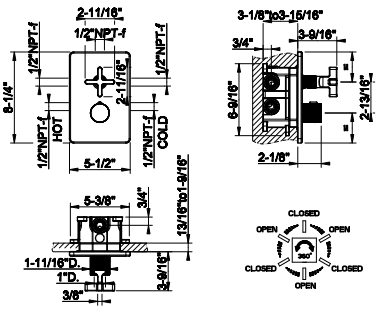

09272+58173

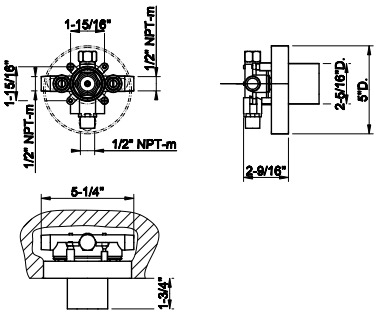

09272

In-wall single exit pressure balance rough valve
- 1/2” connections



031	Chrome	371

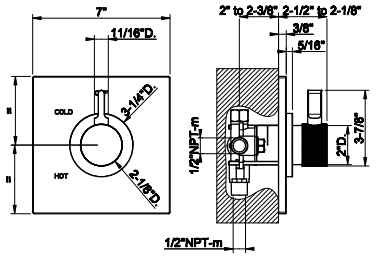

58173

TRIM PARTS ONLY External parts for single exit pressure balance
- Single backplate
- 1/2” connections
- Requires in-wall rough valve 09272
- ADA compliant



031	Chrome	736	726	Warm Bronze Br. PVD	1.164
149	Finox Br. Nickel	995	710	Brass PVD	1.090
299	Matte Black	995	727	Brass Br. PVD	1.164
720	Nickel PVD	1.090	246	Gold PVD	1.237
706	Black Metal PVD	1.090	716	Gold Br. PVD	1.237
707	Black Metal Br. PVD	1.164	845	Dark Bronze	1.164
030	Copper PVD	1.090	187	Aged Bronze	1.164
708	Copper Br. PVD	1.164	713	Antique Brass	1.164
735	Warm Bronze PVD	1.090			

09274+58174

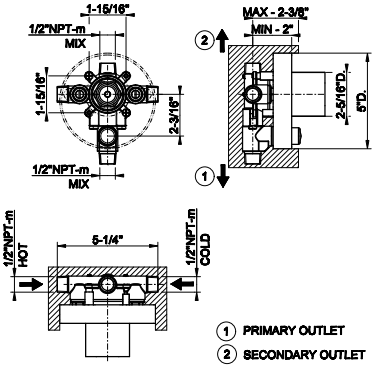

09274

In-wall pressure balance rough valve with 2-way diverter
- 1/2” connections
- Non-Shared Function



031	Chrome	443

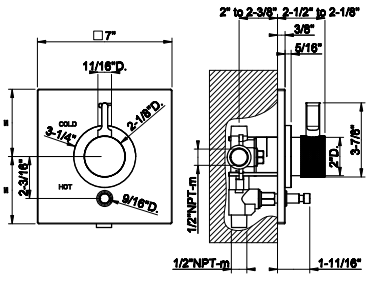

58174

TRIM PARTS ONLY External parts for pressure balance with 2-way diverter
- Single backplate
- 1/2” connections
- Requires in-wall rough valve 09274



031	Chrome	759	726	Warm Bronze Br. PVD	1.202
149	Finox Br. Nickel	1.026	710	Brass PVD	1.125
299	Matte Black	1.026	727	Brass Br. PVD	1.202
720	Nickel PVD	1.125	246	Gold PVD	1.277
706	Black Metal PVD	1.125	716	Gold Br. PVD	1.277
707	Black Metal Br. PVD	1.202	845	Dark Bronze	1.202
030	Copper PVD	1.125	187	Aged Bronze	1.202
708	Copper Br. PVD	1.202	713	Antique Brass	1.202
735	Warm Bronze PVD	1.125			

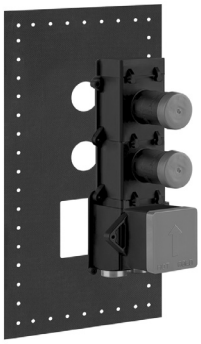

39693

In-wall thermostatic rough valve with 2 volume controls
- High capacity
- 3/4” connections
- Vertical/Horizontal application
- Anti-scalding

031	Chrome	1.903

39693+58224

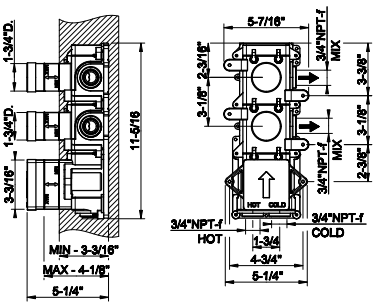

58224



TRIM PARTS ONLY External parts for thermostatic with 2 volume controls
- Single backplate
- High capacity
- 3/4” connections
- Vertical/Horizontal application
- Anti-scalding
- Requires in-wall rough valve 39693

031	Chrome	2.307	726	Warm Bronze Br. PVD	4.737
149	Finox Br. Nickel	4.047	710	Brass PVD	4.438
299	Matte Black	4.047	727	Brass Br. PVD	4.737
720	Nickel PVD	4.438	246	Gold PVD	5.037
706	Black Metal PVD	4.438	716	Gold Br. PVD	5.037
707	Black Metal Br. PVD	4.737	845	Dark Bronze	4.737
030	Copper PVD	4.438	187	Aged Bronze	4.737
708	Copper Br. PVD	4.737	713	Antique Brass	4.737
735	Warm Bronze PVD	4.438			

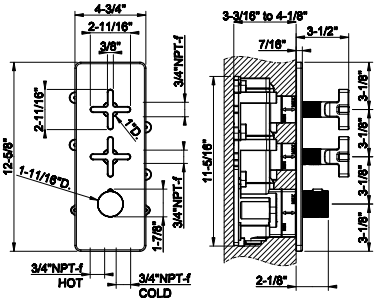

39693

In-wall thermostatic rough valve with 2 volume controls
- High capacity
- 3/4” connections
- Vertical/Horizontal application
- Anti-scalding

031	Chrome	1.903

39693+58344

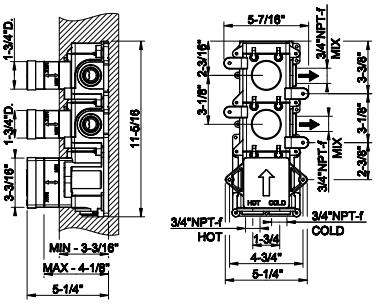

58344



TRIM PARTS ONLY External parts for thermostatic with 2 volume controls
- Separate backplate
- High capacity
- 3/4” connections
- Vertical/Horizontal application
- Anti-scalding
- Requires in-wall rough valve 39693

031	Chrome	2.307	726	Warm Bronze Br. PVD	4.737
149	Finox Br. Nickel	4.047	710	Brass PVD	4.438
299	Matte Black	4.047	727	Brass Br. PVD	4.737
720	Nickel PVD	4.438	246	Gold PVD	5.037
706	Black Metal PVD	4.438	716	Gold Br. PVD	5.037
707	Black Metal Br. PVD	4.737	845	Dark Bronze	4.737
030	Copper PVD	4.438	187	Aged Bronze	4.737
708	Copper Br. PVD	4.737	713	Antique Brass	4.737
735	Warm Bronze PVD	4.438			

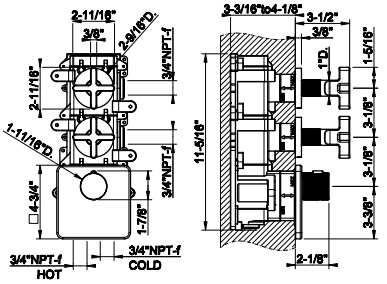

39695+58226

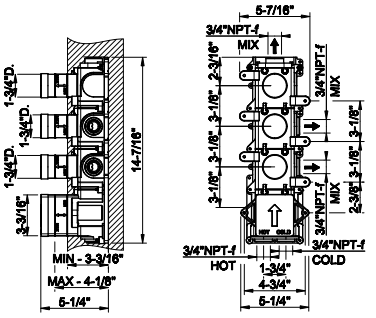

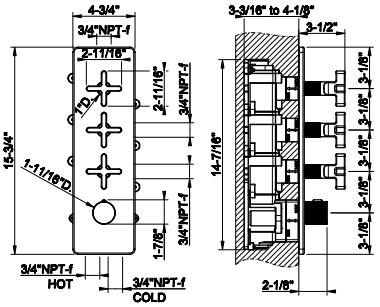

39695

In-wall thermostatic rough valve with 3 volume controls
- High capacity
- 3/4" connections
- Vertical/Horizontal application
- Anti-scalding

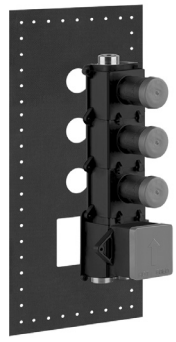

031	Chrome	2.197

58226

TRIM PARTS ONLY External parts for thermostatic with 3 volume controls
- Single backplate
- High capacity
- 3/4" connections
- Vertical/Horizontal application
- Anti-scalding
- Requires in-wall rough valve 39695



031	Chrome	2.433	726	Warm Bronze Br. PVD	5.447
149	Finox Br. Nickel	4.655	710	Brass PVD	5.103
299	Matte Black	4.655	727	Brass Br. PVD	5.447
720	Nickel PVD	5.103	246	Gold PVD	5.791
706	Black Metal PVD	5.103	716	Gold Br. PVD	5.791
707	Black Metal Br. PVD	5.447	845	Dark Bronze	5.447
030	Copper PVD	5.103	187	Aged Bronze	5.447
708	Copper Br. PVD	5.447	713	Antique Brass	5.447
735	Warm Bronze PVD	5.103			

39695+58346

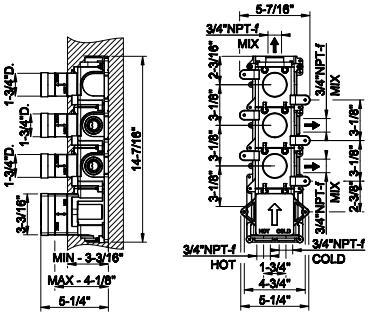

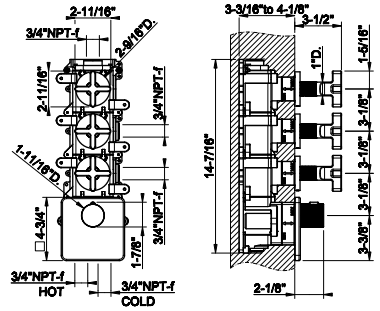

39695

In-wall thermostatic rough valve with 3 volume controls
- High capacity
- 3/4" connections
- Vertical/Horizontal application
- Anti-scalding

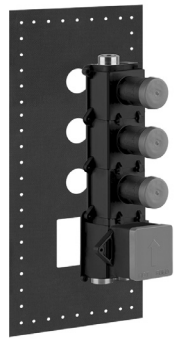

031	Chrome	2.197

58346

TRIM PARTS ONLY External parts for thermostatic with 3 volume controls
- Separate backplate
- High capacity
- 3/4" connections
- Vertical/Horizontal application
- Anti-scalding
- Requires in-wall rough valve 39695



031	Chrome	2.433	726	Warm Bronze Br. PVD	5.447
149	Finox Br. Nickel	4.655	710	Brass PVD	5.103
299	Matte Black	4.655	727	Brass Br. PVD	5.447
720	Nickel PVD	5.103	246	Gold PVD	5.791
706	Black Metal PVD	5.103	716	Gold Br. PVD	5.791
707	Black Metal Br. PVD	5.447	845	Dark Bronze	5.447
030	Copper PVD	5.103	187	Aged Bronze	5.447
708	Copper Br. PVD	5.447	713	Antique Brass	5.447
735	Warm Bronze PVD	5.103			

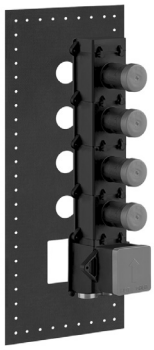

39699

In-wall thermostatic rough valve with 4 volume controls
- High capacity
- 3/4” connections
- Vertical/Horizontal application
- Anti-scalding
- Max flow rate 1.75 GPM

031	Chrome	2.498

39699+58228

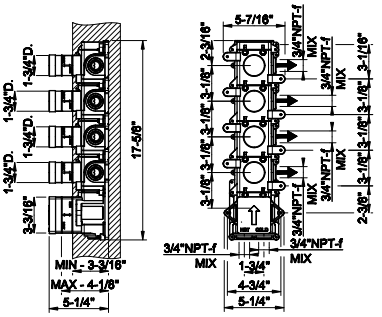



58228

TRIM PARTS ONLY External parts for thermostatic with 4 volume controls
- Single backplate
- High capacity
- 3/4” connections
- Vertical/Horizontal application
- Anti-scalding
- Requires in-wall rough valve 39699

031	Chrome	3.036	726	Warm Bronze Br. PVD	6.232
149	Finox Br. Nickel	5.326	710	Brass PVD	5.839
299	Matte Black	5.326	727	Brass Br. PVD	6.232
720	Nickel PVD	5.839	246	Gold PVD	6.629
706	Black Metal PVD	5.839	716	Gold Br. PVD	6.629
707	Black Metal Br. PVD	6.232	845	Dark Bronze	6.232
030	Copper PVD	5.839	187	Aged Bronze	6.232
708	Copper Br. PVD	6.232	713	Antique Brass	6.232
735	Warm Bronze PVD	5.839			

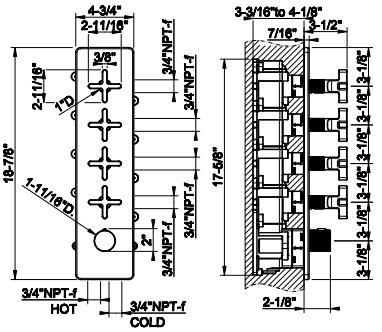

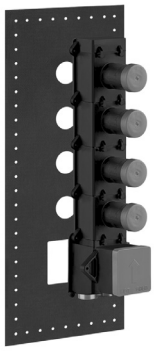

39699

In-wall thermostatic rough valve with 4 volume controls
- High capacity
- 3/4” connections
- Vertical/Horizontal application
- Anti-scalding
- Max flow rate 1.75 GPM

031	Chrome	2.498

39699+58348

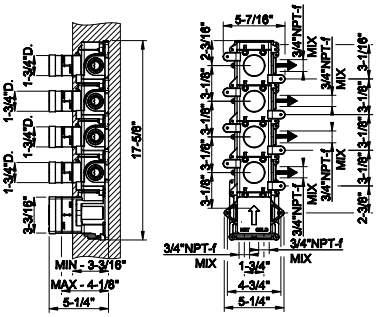



58348

TRIM PARTS ONLY External parts for thermostatic with 4 volume controls
- Separate backplate
- High capacity
- 3/4” connections
- Vertical/Horizontal application
- Anti-scalding
- Requires in-wall rough valve 39699

031	Chrome	3.036	726	Warm Bronze Br. PVD	6.232
149	Finox Br. Nickel	5.326	710	Brass PVD	5.839
299	Matte Black	5.326	727	Brass Br. PVD	6.232
720	Nickel PVD	5.839	246	Gold PVD	6.629
706	Black Metal PVD	5.839	716	Gold Br. PVD	6.629
707	Black Metal Br. PVD	6.232	845	Dark Bronze	6.232
030	Copper PVD	5.839	187	Aged Bronze	6.232
708	Copper Br. PVD	6.232	713	Antique Brass	6.232
735	Warm Bronze PVD	5.839			

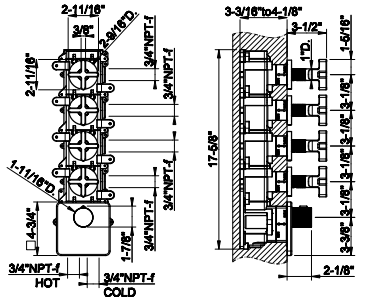

39681+58254

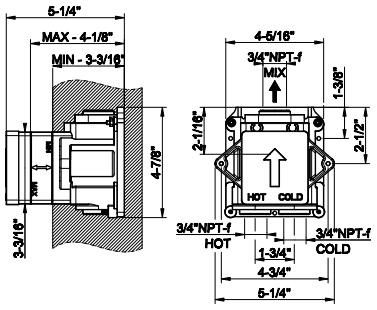

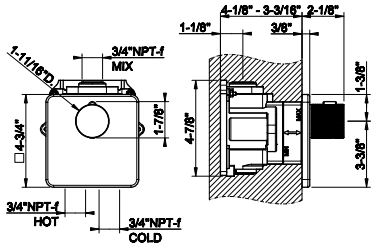

39681

In-wall thermostatic rough valve for individual mixer
- High capacity
- 3/4" connections
- Vertical/Horizontal application
- Anti-scalding

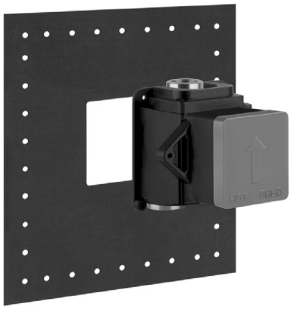

031	Chrome	1.169

58254

TRIM PARTS ONLY External parts for individual thermostatic mixer
- High capacity
- 3/4" connections
- Vertical/Horizontal application
- Anti-scalding
- Requires in-wall rough valve 39681



031	Chrome	1.023	726	Warm Bronze Br. PVD	2.227
149	Finox Br. Nickel	1.901	710	Brass PVD	2.085
299	Matte Black	1.901	727	Brass Br. PVD	2.227
720	Nickel PVD	2.085	246	Gold PVD	2.366
706	Black Metal PVD	2.085	716	Gold Br. PVD	2.366
707	Black Metal Br. PVD	2.227	845	Dark Bronze	2.227
030	Copper PVD	2.085	187	Aged Bronze	2.227
708	Copper Br. PVD	2.227	713	Antique Brass	2.227
735	Warm Bronze PVD	2.085			

39683+58363

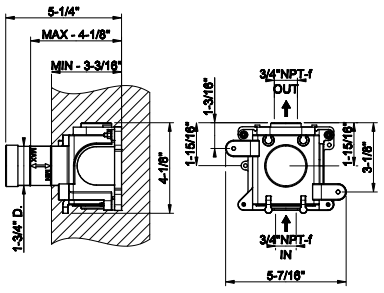

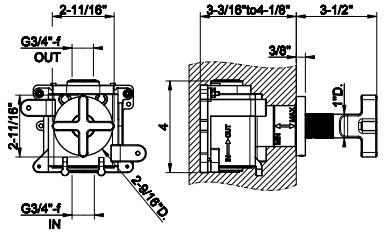

39683

In-wall thermostatic rough valve parts for volume control
- High capacity
- 3/4" connections
- Vertical/Horizontal application
- Anti-scalding

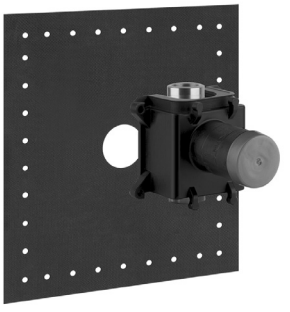

031	Chrome	582

58363

TRIM PARTS ONLY External parts for individual thermostatic volume control
- High capacity
- 3/4" connections
- Vertical/Horizontalapplication
- Anti-scalding
- Requires in-wall rough valve 39683
- ADA compliant

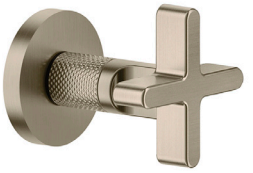

031	Chrome	619	726	Warm Bronze Br. PVD	1.390
149	Finox Br. Nickel	1.186	710	Brass PVD	1.301
299	Matte Black	1.186	727	Brass Br. PVD	1.390
720	Nickel PVD	1.301	246	Gold PVD	1.477
706	Black Metal PVD	1.301	716	Gold Br. PVD	1.477
707	Black Metal Br. PVD	1.390	845	Dark Bronze	1.390
030	Copper PVD	1.301	187	Aged Bronze	1.390
708	Copper Br. PVD	1.390	713	Antique Brass	1.390
735	Warm Bronze PVD	1.301			


GESSI®
INCISO
INCISO
SHOWER



58185

Wall-mounted adjustable shower head with arm.
- 1/2” connections.
- Projection from wall to center 15-1/2”
- Total projection 19-3/4”
- Max flow rate 1.75 GPM

031	Chrome	2.604	726	Warm Bronze Br. PVD	4.113
149	Finox Br. Nickel	3.514	710	Brass PVD	3.853
299	Matte Black	3.514	727	Brass Br. PVD	4.113
720	Nickel PVD	3.853	246	Gold PVD	4.374
706	Black Metal PVD	3.853	716	Gold Br. PVD	4.374
707	Black Metal Br. PVD	4.113	845	Dark Bronze	4.113
030	Copper PVD	3.853	187	Aged Bronze	4.113
708	Copper Br. PVD	4.113	713	Antique Brass	4.113
735	Warm Bronze PVD	3.853			

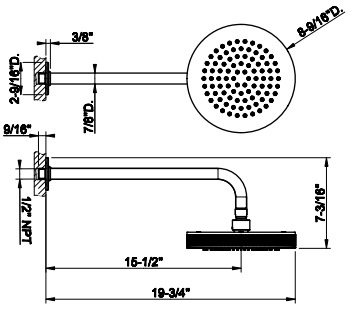



58186

Ceiling-mounted shower head
- 1/2” connections
- Projection from ceiling 11-1/16”
- Max flow rate 1.75 GPM

031	Chrome	2.459	726	Warm Bronze Br. PVD	3.885
149	Finox Br. Nickel	3.322	710	Brass PVD	3.641
299	Matte Black	3.322	727	Brass Br. PVD	3.885
720	Nickel PVD	3.641	246	Gold PVD	4.132
706	Black Metal PVD	3.641	716	Gold Br. PVD	4.132
707	Black Metal Br. PVD	3.885	845	Dark Bronze	3.885
030	Copper PVD	3.641	187	Aged Bronze	3.885
708	Copper Br. PVD	3.885	713	Antique Brass	3.885
735	Warm Bronze PVD	3.641			

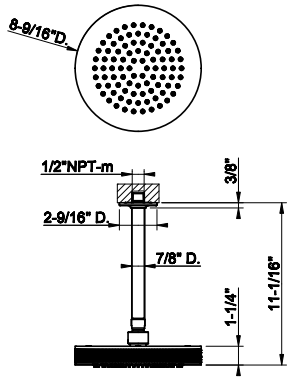



58248

Wall-mounted adjustable shower head with arm.
- 1/2” connections.
- Projection from wall to center 15-1/2”
- Total projection 21-3/8”
- Max flow rate 1.75 GPM

031	Chrome	2.858	726	Warm Bronze Br. PVD	4.515
149	Finox Br. Nickel	3.858	710	Brass PVD	4.229
299	Matte Black	3.858	727	Brass Br. PVD	4.515
720	Nickel PVD	4.229	246	Gold PVD	4.801
706	Black Metal PVD	4.229	716	Gold Br. PVD	4.801
707	Black Metal Br. PVD	4.515	845	Dark Bronze	4.515
030	Copper PVD	4.229	187	Aged Bronze	4.515
708	Copper Br. PVD	4.515	713	Antique Brass	4.515
735	Warm Bronze PVD	4.229			

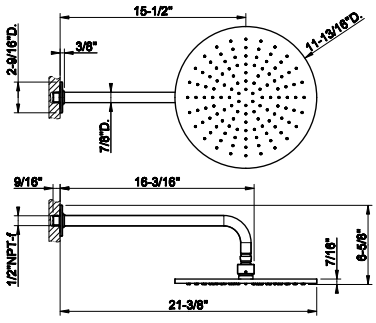



58252

Ceiling-mounted adjustable shower head with arm.
- 1/2” connections.
- Projection from ceiling 10-7/16”
- Max flow rate 1.75 GPM

031	Chrome	2.736	726	Warm Bronze Br. PVD	4.323
149	Finox Br. Nickel	3.694	710	Brass PVD	4.048
299	Matte Black	3.694	727	Brass Br. PVD	4.323
720	Nickel PVD	4.048	246	Gold PVD	4.597
706	Black Metal PVD	4.048	716	Gold Br. PVD	4.597
707	Black Metal Br. PVD	4.323	845	Dark Bronze	4.323
030	Copper PVD	4.048	187	Aged Bronze	4.323
708	Copper Br. PVD	4.323	713	Antique Brass	4.323
735	Warm Bronze PVD	4.048			

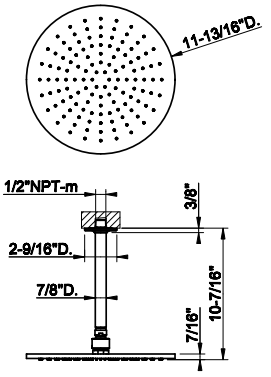

INCISO BATH&SHOWER

58148

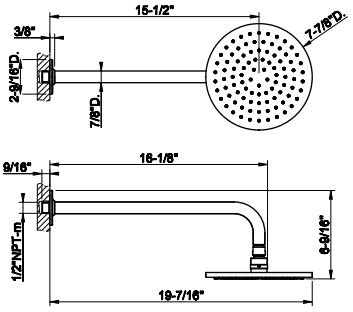

Wall-mounted adjustable shower head with arm.
- 1/2" connections.
- Projection from wall to center 15-1/2"
- Total projection 19-7/16"
- Max flow rate 1.75 GPM



031	Chrome	1.783	726	Warm Bronze Br. PVD	2.818
149	Finox Br. Nickel	2.407	710	Brass PVD	2.640
299	Matte Black	2.407	727	Brass Br. PVD	2.818
720	Nickel PVD	2.640	246	Gold PVD	2.995
706	Black Metal PVD	2.640	716	Gold Br. PVD	2.995
707	Black Metal Br. PVD	2.818	845	Dark Bronze	2.818
030	Copper PVD	2.640	187	Aged Bronze	2.818
708	Copper Br. PVD	2.818	713	Antique Brass	2.818
735	Warm Bronze PVD	2.640			

58152

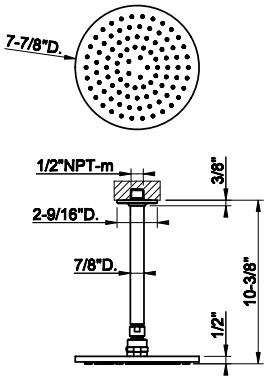

Ceiling-mounted adjustable shower head with arm.
- 1/2" connections.
- Projection from ceiling 10-3/8"
- Max flow rate 1.75 GPM



031	Chrome	1.642	726	Warm Bronze Br. PVD	2.591
149	Finox Br. Nickel	2.215	710	Brass PVD	2.428
299	Matte Black	2.215	727	Brass Br. PVD	2.591
720	Nickel PVD	2.428	246	Gold PVD	2.756
706	Black Metal PVD	2.428	716	Gold Br. PVD	2.756
707	Black Metal Br. PVD	2.591	845	Dark Bronze	2.591
030	Copper PVD	2.428	187	Aged Bronze	2.591
708	Copper Br. PVD	2.591	713	Antique Brass	2.591
735	Warm Bronze PVD	2.428			

58189

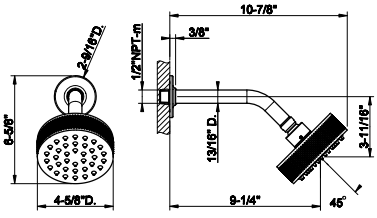

Wall-mounted adjustable shower head with arm.
- 1/2" connections.
- Projection from wall to center 9-1/4"
- Total projection 10-7/8"
- Max flow rate 1.75 GPM



031	Chrome	1.759	726	Warm Bronze Br. PVD	2.779
149	Finox Br. Nickel	2.375	710	Brass PVD	2.604
299	Matte Black	2.375	727	Brass Br. PVD	2.779
720	Nickel PVD	2.604	246	Gold PVD	2.955
706	Black Metal PVD	2.604	716	Gold Br. PVD	2.955
707	Black Metal Br. PVD	2.779	845	Dark Bronze	2.779
030	Copper PVD	2.604	187	Aged Bronze	2.779
708	Copper Br. PVD	2.779	713	Antique Brass	2.779
735	Warm Bronze PVD	2.604			

66156

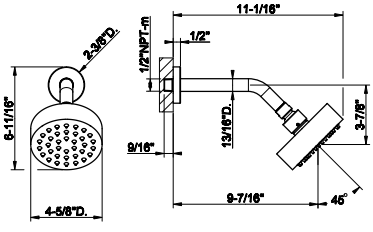

Wall-mounted adjustable shower head with arm.
- 1/2" connections.
- Projection from wall to center 9-7/16"
- Total projection 11-1/16"
- Max flow rate 1.75 GPM



031	Chrome	1.554	726	Warm Bronze Br. PVD	2.456
149	Finox Br. Nickel	2.098	710	Brass PVD	2.300
299	Matte Black	2.098	727	Brass Br. PVD	2.456
720	Nickel PVD	2.300	246	Gold PVD	2.611
706	Black Metal PVD	2.300	716	Gold Br. PVD	2.611
707	Black Metal Br. PVD	2.456	845	Dark Bronze	2.456
030	Copper PVD	2.300	187	Aged Bronze	2.456
708	Copper Br. PVD	2.456	713	Antique Brass	2.456
735	Warm Bronze PVD	2.300			

66158



Wall-mounted adjustable multi-function shower head with arm:
•1/2” connections
•Projection from wall to center 9-5/8”
•Total projection 11-1/8”
•Max flow rate 1.75 gpm

031	Chrome	1.907	726	Warm Bronze Br. PVD	3.013
149	Finox Br. Nickel	2.575	710	Brass PVD	2.823
299	Matte Black	2.575	727	Brass Br. PVD	3.013
720	Nickel PVD	2.823	246	Gold PVD	3.204
706	Black Metal PVD	2.823	716	Gold Br. PVD	3.204
707	Black Metal Br. PVD	3.013	845	Dark Bronze	3.013
030	Copper PVD	2.823	187	Aged Bronze	3.013
708	Copper Br. PVD	3.013	713	Antique Brass	3.013
735	Warm Bronze PVD	2.823			

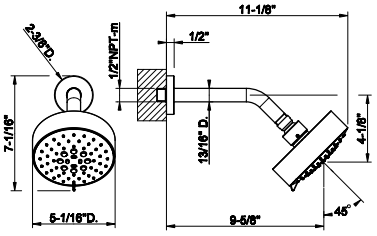

58181



Wall-mounted adjustable multi-function shower head with arm
• 1/2” connections
• Projection from wall to center 9-1/2”
• Total projection 10-3/8”
• Max flow rate 1.75 GPM

031	Chrome	943	726	Warm Bronze Br. PVD	1.491
149	Finox Br. Nickel	1.275	710	Brass PVD	1.397
299	Matte Black	1.275	727	Brass Br. PVD	1.491
720	Nickel PVD	1.397	246	Gold PVD	1.585
706	Black Metal PVD	1.397	716	Gold Br. PVD	1.585
707	Black Metal Br. PVD	1.491	845	Dark Bronze	1.491
030	Copper PVD	1.397	187	Aged Bronze	1.491
708	Copper Br. PVD	1.491	713	Antique Brass	1.491
735	Warm Bronze PVD	1.397			

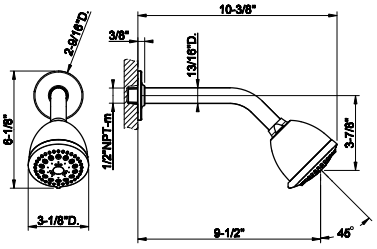

58180



Wall-mounted adjustable shower head with arm
• 1/2” connections
• Projection from wall to center 9-9/16”
• Total projection 10-5/8”
• Max flow rate 1.75 GPM

031	Chrome	822	726	Warm Bronze Br. PVD	1.299
149	Finox Br. Nickel	1.110	710	Brass PVD	1.216
299	Matte Black	1.110	727	Brass Br. PVD	1.299
720	Nickel PVD	1.216	246	Gold PVD	1.379
706	Black Metal PVD	1.216	716	Gold Br. PVD	1.379
707	Black Metal Br. PVD	1.299	845	Dark Bronze	1.299
030	Copper PVD	1.216	187	Aged Bronze	1.299
708	Copper Br. PVD	1.299	713	Antique Brass	1.299
735	Warm Bronze PVD	1.216			

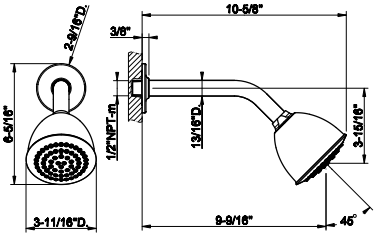

58142



Handshower and adjustable sliding rail set
• Adjustable bar
• Adjustable hook
• 59” Flex hose
• Wall elbow
• Max flow rate 1.75 GPM

031	Chrome	2.116	726	Warm Bronze Br. PVD	3.346
149	Finox Br. Nickel	2.859	710	Brass PVD	3.134
299	Matte Black	2.859	727	Brass Br. PVD	3.346
720	Nickel PVD	3.134	246	Gold PVD	3.556
706	Black Metal PVD	3.134	716	Gold Br. PVD	3.556
707	Black Metal Br. PVD	3.346	845	Dark Bronze	3.346
030	Copper PVD	3.134	187	Aged Bronze	3.346
708	Copper Br. PVD	3.346	713	Antique Brass	3.346
735	Warm Bronze PVD	3.134			

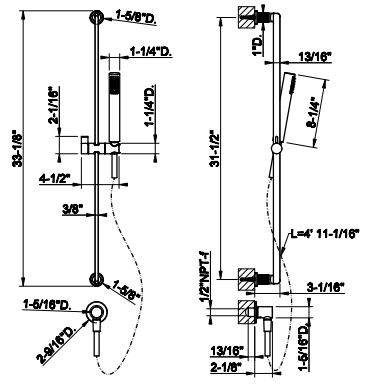

INCISO BATH&SHOWER

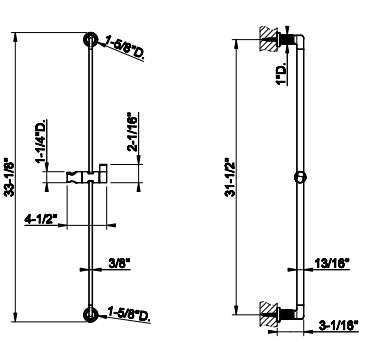

58144

Handshower sliding rail only
- Adjustable bar
- Adjustable hook
- Requires handshower 14372, flex hose 01637 and wall elbow 58169



031	Chrome	1.548	726	Warm Bronze Br. PVD	2.445
149	Finox Br. Nickel	2.089	710	Brass PVD	2.290
299	Matte Black	2.089	727	Brass Br. PVD	2.445
720	Nickel PVD	2.290	246	Gold PVD	2.599
706	Black Metal PVD	2.290	716	Gold Br. PVD	2.599
707	Black Metal Br. PVD	2.445	845	Dark Bronze	2.445
030	Copper PVD	2.290	187	Aged Bronze	2.445
708	Copper Br. PVD	2.445	713	Antique Brass	2.445
735	Warm Bronze PVD	2.290			

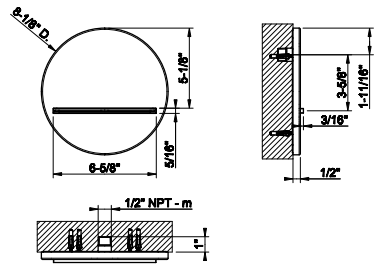

65295

Wall-fixing cascade spout
- 1/2" connections
- Flow rate 4.8 GPM at 60 PSI



031	Chrome	1.937	726	Warm Bronze Br. PVD	3.058
149	Finox Br. Nickel	2.614	710	Brass PVD	2.864
299	Matte Black	2.614	727	Brass Br. PVD	3.058
720	Nickel PVD	2.864	246	Gold PVD	3.255
706	Black Metal PVD	2.864	716	Gold Br. PVD	3.255
707	Black Metal Br. PVD	3.058	845	Dark Bronze	3.058
030	Copper PVD	2.864	187	Aged Bronze	3.058
708	Copper Br. PVD	3.058	713	Antique Brass	3.058
735	Warm Bronze PVD	2.864	279	Matte White	2.614

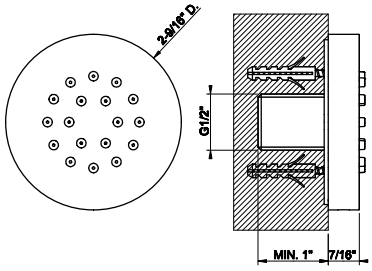

32971

Round body spray
- 1/2" connections
- Max flow rate 1 GPM at 60 PSI



031	Chrome	552	726	Warm Bronze Br. PVD	873
149	Finox Br. Nickel	746	710	Brass PVD	840
299	Matte Black	746	727	Brass Br. PVD	873
147	Chrome Br.	766	246	Gold PVD	929
720	Nickel PVD	818	716	Gold Br. PVD	929
706	Black Metal PVD	818	845	Dark Bronze	873
707	Black Metal Br. PVD	873	187	Aged Bronze	873
030	Copper PVD	818	713	Antique Brass	873
708	Copper Br. PVD	873	279	Matte White	746
735	Warm Bronze PVD	840			

32985

In-wall rough valve for pivotable body spray 32982



031	Chrome	406

32985+32982

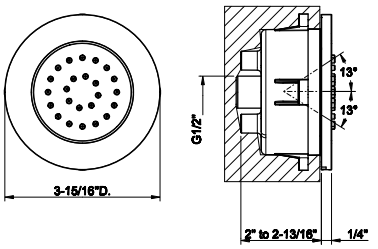

32982

TRIM PARTS ONLY Round in-wall pivotable body spray
- 1/2” connections
- Requires in-wall rough valve 32985
- Max flow rate 1 GPM at60 PSI



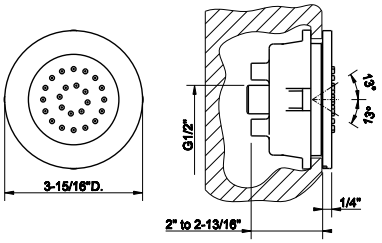

031	Chrome	773	726	Warm Bronze Br. PVD	1.223
149	Finox Br. Nickel	1.045	710	Brass PVD	1.145
299	Matte Black	1.045	727	Brass Br. PVD	1.223
147	Chrome Br.	1.045	246	Gold PVD	1.300
720	Nickel PVD	1.145	716	Gold Br. PVD	1.300
706	Black Metal PVD	1.145	845	Dark Bronze	1.223
707	Black Metal Br. PVD	1.223	187	Aged Bronze	1.223
030	Copper PVD	1.145	713	Antique Brass	1.223
708	Copper Br. PVD	1.223	279	Matte White	1.045
735	Warm Bronze PVD	1.145			

13375

Pivotable body spray
- 1/2” connections
- Max flow rate 0.9 GPM at 60 PSI



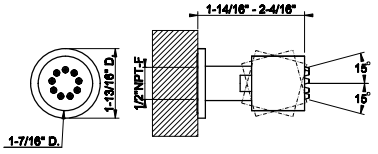

031	Chrome	405	726	Warm Bronze Br. PVD	639
149	Finox Br. Nickel	547	710	Brass PVD	598
299	Matte Black	547	727	Brass Br. PVD	639
147	Chrome Br.	547	246	Gold PVD	680
720	Nickel PVD	598	716	Gold Br. PVD	680
706	Black Metal PVD	598	845	Dark Bronze	639
707	Black Metal Br. PVD	639	187	Aged Bronze	639
030	Copper PVD	598	713	Antique Brass	639
708	Copper Br. PVD	639	279	Matte White	547
735	Warm Bronze PVD	598			

58123

Handshower set
- Fixed hook.
- Wall elbow
- 59” flex hose
- Max flow rate 1.75 GPM



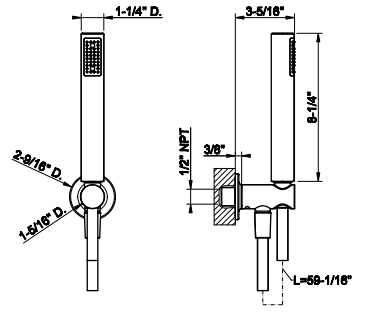

031	Chrome	1.004	726	Warm Bronze Br. PVD	1.585
149	Finox Br. Nickel	1.355	710	Brass PVD	1.486
299	Matte Black	1.355	727	Brass Br. PVD	1.585
720	Nickel PVD	1.486	246	Gold PVD	1.688
706	Black Metal PVD	1.486	716	Gold Br. PVD	1.688
707	Black Metal Br. PVD	1.585	845	Dark Bronze	1.585
030	Copper PVD	1.486	187	Aged Bronze	1.585
708	Copper Br. PVD	1.585	713	Antique Brass	1.585
735	Warm Bronze PVD	1.486			

63099

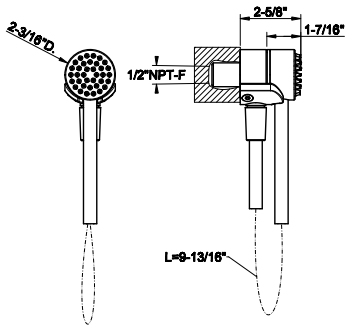

Magnetic anti-limestone handshower set
- Fixed hook
- Wall elbow
- 59” Cromalux flex hose
- Max flow rate 1.75 GPM

031	Chrome	1.213	726	Warm Bronze Br. PVD	1.916
149	Finox Br. Nickel	1.638	710	Brass PVD	1.794
299	Matte Black	1.638	727	Brass Br. PVD	1.916
720	Nickel PVD	1.794	246	Gold PVD	2.037
706	Black Metal PVD	1.794	716	Gold Br. PVD	2.037
707	Black Metal Br. PVD	1.916	845	Dark Bronze	1.916
030	Copper PVD	1.794	187	Aged Bronze	1.916
708	Copper Br. PVD	1.916	713	Antique Brass	1.916
735	Warm Bronze PVD	1.794			



58161

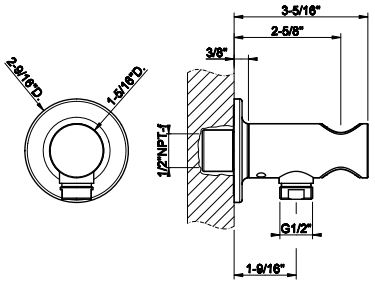

Wall elbow with built in water intake and fixed hook
- 1/2” connection

031	Chrome	525	726	Warm Bronze Br. PVD	828
149	Finox Br. Nickel	709	710	Brass PVD	777
299	Matte Black	709	727	Brass Br. PVD	828
720	Nickel PVD	777	246	Gold PVD	883
706	Black Metal PVD	777	716	Gold Br. PVD	883
707	Black Metal Br. PVD	828	845	Dark Bronze	828
030	Copper PVD	777	187	Aged Bronze	828
708	Copper Br. PVD	828	713	Antique Brass	828
735	Warm Bronze PVD	777			



58169

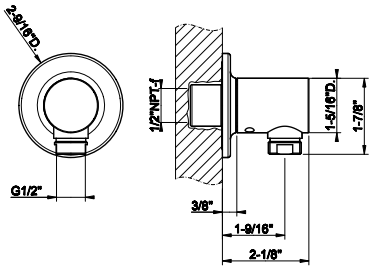

Wall elbow with backplate
- 1/2” connection

031	Chrome	429	726	Warm Bronze Br. PVD	678
149	Finox Br. Nickel	580	710	Brass PVD	635
299	Matte Black	580	727	Brass Br. PVD	678
720	Nickel PVD	635	246	Gold PVD	720
706	Black Metal PVD	635	716	Gold Br. PVD	720
707	Black Metal Br. PVD	678	845	Dark Bronze	678
030	Copper PVD	635	187	Aged Bronze	678
708	Copper Br. PVD	678	713	Antique Brass	678
735	Warm Bronze PVD	635			



58157

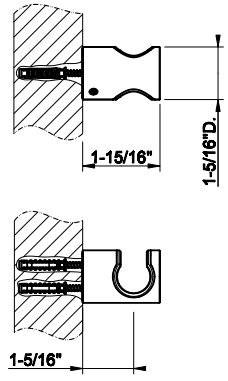

Fixed handshower hook.

031	Chrome	245	726	Warm Bronze Br. PVD	387
149	Finox Br. Nickel	332	710	Brass PVD	363
299	Matte Black	332	727	Brass Br. PVD	387
720	Nickel PVD	363	246	Gold PVD	411
706	Black Metal PVD	363	716	Gold Br. PVD	411
707	Black Metal Br. PVD	387	845	Dark Bronze	387
030	Copper PVD	363	187	Aged Bronze	387
708	Copper Br. PVD	387	713	Antique Brass	387
735	Warm Bronze PVD	363			



58160

Adjustable handshower hook.



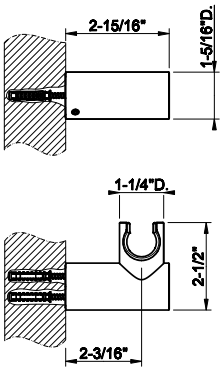

031	Chrome	434	726	Warm Bronze Br. PVD	686
149	Finox Br. Nickel	586	710	Brass PVD	642
299	Matte Black	586	727	Brass Br. PVD	686
720	Nickel PVD	642	246	Gold PVD	728
706	Black Metal PVD	642	716	Gold Br. PVD	728
707	Black Metal Br. PVD	686	845	Dark Bronze	686
030	Copper PVD	642	187	Aged Bronze	686
708	Copper Br. PVD	686	713	Antique Brass	686
735	Warm Bronze PVD	642			

14372

Handshower
• Max flow rate 1.75 GPM



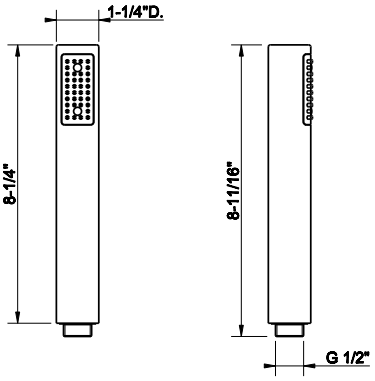

031	Chrome	134	726	Warm Bronze Br. PVD	394
149	Finox Br. Nickel	317	710	Brass PVD	371
299	Matte Black	225	727	Brass Br. PVD	394
720	Nickel PVD	371	246	Gold PVD	418
706	Black Metal PVD	371	716	Gold Br. PVD	418
707	Black Metal Br. PVD	394	845	Dark Bronze	394
030	Copper PVD	371	187	Aged Bronze	394
708	Copper Br. PVD	394	713	Antique Brass	394
735	Warm Bronze PVD	371	279	Matte White	317

14371

Handshower
• Max flow rate 1.75 GPM



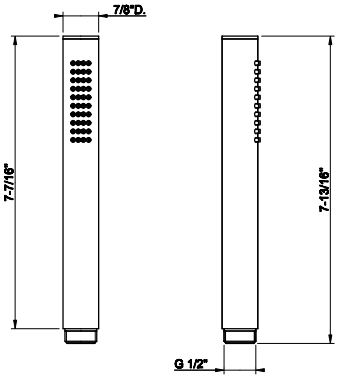

031	Chrome	268	735	Warm Bronze PVD	425
149	Finox Br. Nickel	363	726	Warm Bronze Br. PVD	450
299	Matte Black	363	710	Brass PVD	425
147	Chrome Br.	363	727	Brass Br. PVD	450
720	Nickel PVD	425	246	Gold PVD	478
706	Black Metal PVD	425	716	Gold Br. PVD	478
707	Black Metal Br. PVD	450	845	Dark Bronze	450
030	Copper PVD	425	187	Aged Bronze	450
708	Copper Br. PVD	450	713	Antique Brass	450

14370

Antilimestone handshower
• Single spray
• Max flow rate 1.75 GPM



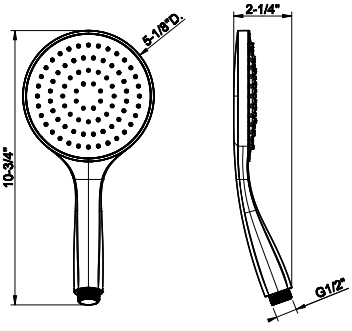

031	Chrome	189	726	Warm Bronze Br. PVD	465
149	Finox Br. Nickel	377	710	Brass PVD	435
299	Matte Black	377	727	Brass Br. PVD	465
147	Chrome Br.	377	246	Gold PVD	493
720	Nickel PVD	435	716	Gold Br. PVD	493
706	Black Metal PVD	435	845	Dark Bronze	465
707	Black Metal Br. PVD	465	187	Aged Bronze	465
030	Copper PVD	435	713	Antique Brass	465
708	Copper Br. PVD	465	279	Matte White	377
735	Warm Bronze PVD	435			

INCISO BATH&SHOWER

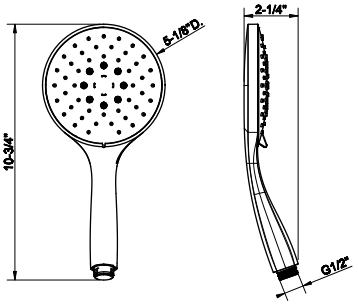

14376

Handshower with white insert
- 3-pattern spray
- Max flow rate 1.75 GPM



031	Chrome	390	726	Warm Bronze Br. PVD	656
149	Finox Br. Nickel	527	710	Brass PVD	616
299	Matte Black	527	727	Brass Br. PVD	656
147	Chrome Br.	527	246	Gold PVD	681
720	Nickel PVD	616	716	Gold Br. PVD	681
706	Black Metal PVD	616	845	Dark Bronze	656
707	Black Metal Br. PVD	656	187	Aged Bronze	656
030	Copper PVD	616	713	Antique Brass	656
708	Copper Br. PVD	656	279	Matte White	527
735	Warm Bronze PVD	616			

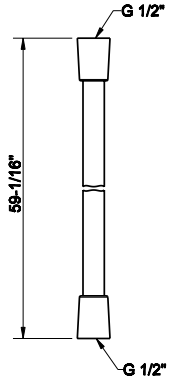

01637

59” flex hose



031	Chrome	134	726	Warm Bronze Br. PVD	214
149	Finox Br. Nickel	173	710	Brass PVD	203
299	Matte Black	173	727	Brass Br. PVD	214
147	Chrome Br.	173	246	Gold PVD	227
720	Nickel PVD	203	716	Gold Br. PVD	227
706	Black Metal PVD	203	845	Dark Bronze	214
707	Black Metal Br. PVD	214	187	Aged Bronze	214
030	Copper PVD	203	713	Antique Brass	214
708	Copper Br. PVD	214	279	Matte White	173
735	Warm Bronze PVD	203			

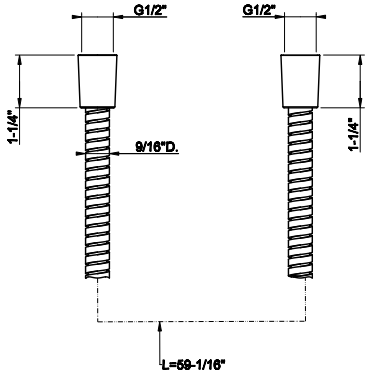

01724

Metal flexible hose, 59” length, 1/2” connector.



031	Chrome	196	726	Warm Bronze Br. PVD	308
149	Finox Br. Nickel	260	710	Brass PVD	288
299	Matte Black	260	727	Brass Br. PVD	308
147	Chrome Br.	260	246	Gold PVD	288
720	Nickel PVD	308	716	Gold Br. PVD	341
706	Black Metal PVD	288	845	Dark Bronze	308
707	Black Metal Br. PVD	308	187	Aged Bronze	308
030	Copper PVD	288	713	Antique Brass	308
708	Copper Br. PVD	308	279	Matte White	259
735	Warm Bronze PVD	288			



GESSI

INCISO
ACCESSORIES

58501

Wall-mounted soap dish, white



031	Chrome	625	726	Warm Bronze Br. PVD	986
149	Finox Br. Nickel	843	710	Brass PVD	925
299	Matte Black	843	727	Brass Br. PVD	986
720	Nickel PVD	925	246	Gold PVD	1.049
706	Black Metal PVD	925	716	Gold Br. PVD	1.049
707	Black Metal Br. PVD	986	845	Dark Bronze	986
030	Copper PVD	925	187	Aged Bronze	986
708	Copper Br. PVD	986	713	Antique Brass	986
735	Warm Bronze PVD	925			

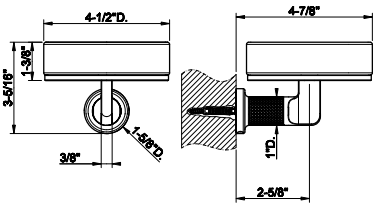

58502

Wall-mounted soap dish, black



031	Chrome	625	726	Warm Bronze Br. PVD	986
149	Finox Br. Nickel	843	710	Brass PVD	925
299	Matte Black	843	727	Brass Br. PVD	986
720	Nickel PVD	925	246	Gold PVD	1.049
706	Black Metal PVD	925	716	Gold Br. PVD	1.049
707	Black Metal Br. PVD	986	845	Dark Bronze	986
030	Copper PVD	925	187	Aged Bronze	986
708	Copper Br. PVD	986	713	Antique Brass	986
735	Warm Bronze PVD	925			

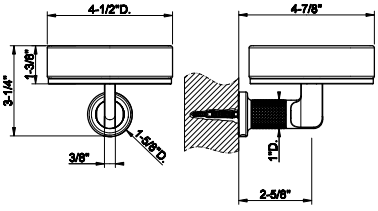

58507

Wall-mounted holder, white



031	Chrome	684	726	Warm Bronze Br. PVD	1.078
149	Finox Br. Nickel	924	710	Brass PVD	1.010
299	Matte Black	924	727	Brass Br. PVD	1.078
720	Nickel PVD	1.010	246	Gold PVD	1.148
706	Black Metal PVD	1.010	716	Gold Br. PVD	1.148
707	Black Metal Br. PVD	1.078	845	Dark Bronze	1.078
030	Copper PVD	1.010	187	Aged Bronze	1.078
708	Copper Br. PVD	1.078	713	Antique Brass	1.078
735	Warm Bronze PVD	1.010			

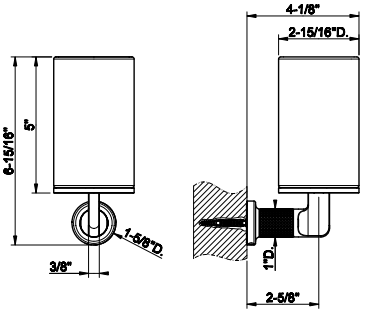

58508

Wall-mounted holder, black



031	Chrome	684	726	Warm Bronze Br. PVD	1.078
149	Finox Br. Nickel	924	710	Brass PVD	1.010
299	Matte Black	924	727	Brass Br. PVD	1.078
720	Nickel PVD	1.010	246	Gold PVD	1.148
706	Black Metal PVD	1.010	716	Gold Br. PVD	1.148
707	Black Metal Br. PVD	1.078	845	Dark Bronze	1.078
030	Copper PVD	1.010	187	Aged Bronze	1.078
708	Copper Br. PVD	1.078	713	Antique Brass	1.078
735	Warm Bronze PVD	1.010			

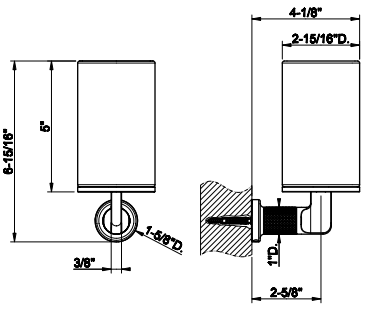

INCISO ACCESSORIES

58513

Wall-mounted liquid soap dispenser , white

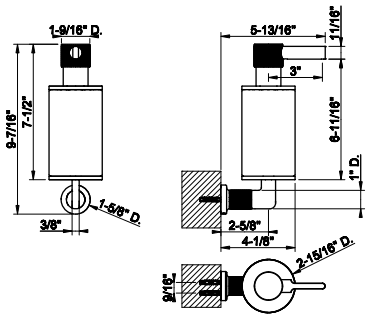

031	Chrome	1.247	726	Warm Bronze Br. PVD	1.969
149	Finox Br. Nickel	1.684	710	Brass PVD	1.845
299	Matte Black	1.684	727	Brass Br. PVD	1.969
720	Nickel PVD	1.845	246	Gold PVD	2.093
706	Black Metal PVD	1.845	716	Gold Br. PVD	2.093
707	Black Metal Br. PVD	1.969	845	Dark Bronze	1.969
030	Copper PVD	1.845	187	Aged Bronze	1.969
708	Copper Br. PVD	1.969	713	Antique Brass	1.969
735	Warm Bronze PVD	1.845			



58514

Wall-mounted liquid soap dispenser - black

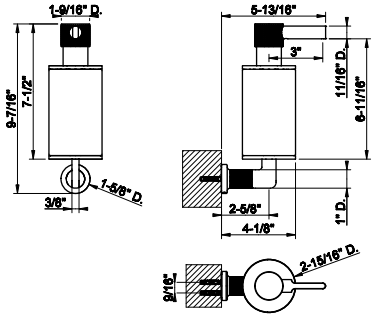

031	Chrome	1.247	726	Warm Bronze Br. PVD	1.969
149	Finox Br. Nickel	1.684	710	Brass PVD	1.845
299	Matte Black	1.684	727	Brass Br. PVD	1.969
720	Nickel PVD	1.845	246	Gold PVD	2.093
706	Black Metal PVD	1.845	716	Gold Br. PVD	2.093
707	Black Metal Br. PVD	1.969	845	Dark Bronze	1.969
030	Copper PVD	1.845	187	Aged Bronze	1.969
708	Copper Br. PVD	1.969	713	Antique Brass	1.969
735	Warm Bronze PVD	1.845			



58519

Wall-mounted brush holder, white

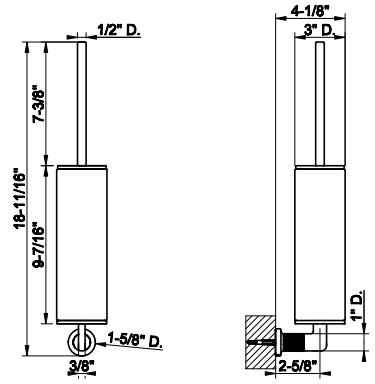

031	Chrome	1.062	726	Warm Bronze Br. PVD	1.676
149	Finox Br. Nickel	1.433	710	Brass PVD	1.571
299	Matte Black	1.433	727	Brass Br. PVD	1.676
720	Nickel PVD	1.571	246	Gold PVD	1.783
706	Black Metal PVD	1.571	716	Gold Br. PVD	1.783
707	Black Metal Br. PVD	1.676	845	Dark Bronze	1.676
030	Copper PVD	1.571	187	Aged Bronze	1.676
708	Copper Br. PVD	1.676	713	Antique Brass	1.676
735	Warm Bronze PVD	1.571			



58520

Wall-mounted brush holder, black

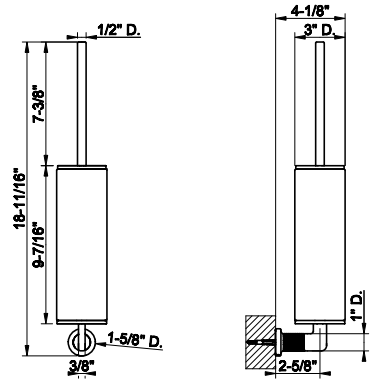

031	Chrome	1.062	726	Warm Bronze Br. PVD	1.676
149	Finox Br. Nickel	1.433	710	Brass PVD	1.571
299	Matte Black	1.433	727	Brass Br. PVD	1.676
720	Nickel PVD	1.571	246	Gold PVD	1.783
706	Black Metal PVD	1.571	716	Gold Br. PVD	1.783
707	Black Metal Br. PVD	1.676	845	Dark Bronze	1.676
030	Copper PVD	1.571	187	Aged Bronze	1.676
708	Copper Br. PVD	1.676	713	Antique Brass	1.676
735	Warm Bronze PVD	1.571			



58525

Standing soap holder, white



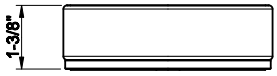

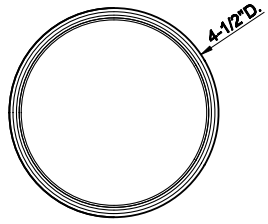

031	Chrome	391	726	Warm Bronze Br. PVD	618
149	Finox Br. Nickel	528	710	Brass PVD	580
299	Matte Black	528	727	Brass Br. PVD	618
720	Nickel PVD	580	246	Gold PVD	658
706	Black Metal PVD	580	716	Gold Br. PVD	658
707	Black Metal Br. PVD	618	845	Dark Bronze	618
030	Copper PVD	580	187	Aged Bronze	618
708	Copper Br. PVD	618	713	Antique Brass	618
735	Warm Bronze PVD	580	279	Matte White	528

58526

Standing soap holder, black



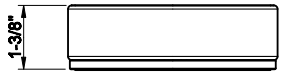

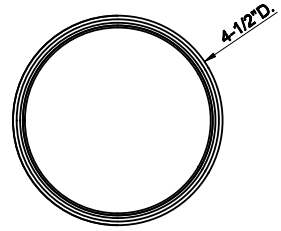

031	Chrome	391	726	Warm Bronze Br. PVD	618
149	Finox Br. Nickel	528	710	Brass PVD	580
299	Matte Black	528	727	Brass Br. PVD	618
720	Nickel PVD	580	246	Gold PVD	658
706	Black Metal PVD	580	716	Gold Br. PVD	658
707	Black Metal Br. PVD	618	845	Dark Bronze	618
030	Copper PVD	580	187	Aged Bronze	618
708	Copper Br. PVD	618	713	Antique Brass	618
735	Warm Bronze PVD	580	279	Matte White	528

58531

Standing tumbler holder, white



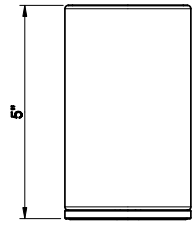

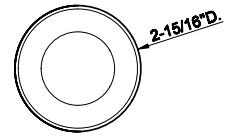

031	Chrome	436	726	Warm Bronze Br. PVD	689
149	Finox Br. Nickel	590	710	Brass PVD	647
299	Matte Black	590	727	Brass Br. PVD	689
720	Nickel PVD	647	246	Gold PVD	733
706	Black Metal PVD	647	716	Gold Br. PVD	733
707	Black Metal Br. PVD	689	845	Dark Bronze	689
030	Copper PVD	647	187	Aged Bronze	689
708	Copper Br. PVD	689	713	Antique Brass	689
735	Warm Bronze PVD	647	279	Matte White	590

58532

Standing tumbler holder, black



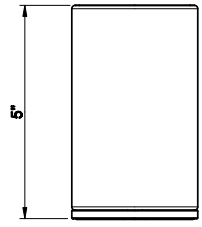

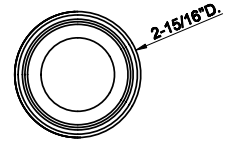

031	Chrome	436	726	Warm Bronze Br. PVD	689
149	Finox Br. Nickel	590	710	Brass PVD	647
299	Matte Black	590	727	Brass Br. PVD	689
720	Nickel PVD	647	246	Gold PVD	733
706	Black Metal PVD	647	716	Gold Br. PVD	733
707	Black Metal Br. PVD	689	845	Dark Bronze	689
030	Copper PVD	647	187	Aged Bronze	689
708	Copper Br. PVD	689	713	Antique Brass	689
735	Warm Bronze PVD	647	279	Matte White	590

INCISO ACCESSORIES

58537

Standing soap dispenser holder, white

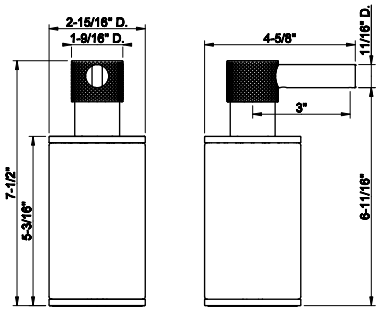



031	Chrome	1.069	726	Warm Bronze Br. PVD	1.688
149	Finox Br. Nickel	1.443	710	Brass PVD	1.581
299	Matte Black	1.443	727	Brass Br. PVD	1.688
720	Nickel PVD	1.581	246	Gold PVD	1.793
706	Black Metal PVD	1.581	716	Gold Br. PVD	1.793
707	Black Metal Br. PVD	1.688	845	Dark Bronze	1.688
030	Copper PVD	1.581	187	Aged Bronze	1.688
708	Copper Br. PVD	1.688	713	Antique Brass	1.688
735	Warm Bronze PVD	1.581			

58538

Standing soap dispenser holder, black

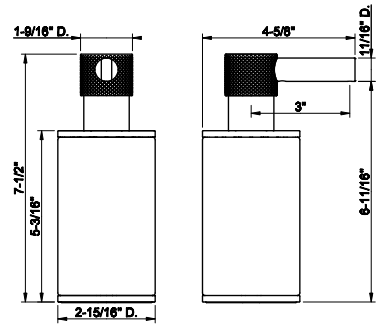



031	Chrome	1.069	726	Warm Bronze Br. PVD	1.688
149	Finox Br. Nickel	1.443	710	Brass PVD	1.581
299	Matte Black	1.443	727	Brass Br. PVD	1.688
720	Nickel PVD	1.581	246	Gold PVD	1.793
706	Black Metal PVD	1.581	716	Gold Br. PVD	1.793
707	Black Metal Br. PVD	1.688	845	Dark Bronze	1.688
030	Copper PVD	1.581	187	Aged Bronze	1.688
708	Copper Br. PVD	1.688	713	Antique Brass	1.688
735	Warm Bronze PVD	1.581			

58543

Standing brush holder, white

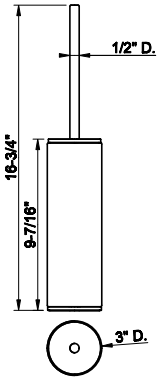



031	Chrome	848	726	Warm Bronze Br. PVD	1.340
149	Finox Br. Nickel	1.145	710	Brass PVD	1.256
299	Matte Black	1.145	727	Brass Br. PVD	1.340
720	Nickel PVD	1.256	246	Gold PVD	1.424
706	Black Metal PVD	1.256	716	Gold Br. PVD	1.424
707	Black Metal Br. PVD	1.340	845	Dark Bronze	1.340
030	Copper PVD	1.256	187	Aged Bronze	1.340
708	Copper Br. PVD	1.340	713	Antique Brass	1.340
735	Warm Bronze PVD	1.256	279	Matte White	1.145

58544

Standing brush holder, black

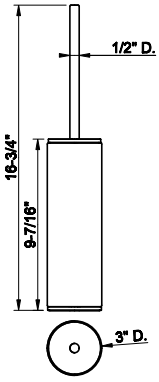



031	Chrome	848	726	Warm Bronze Br. PVD	1.340
149	Finox Br. Nickel	1.145	710	Brass PVD	1.256
299	Matte Black	1.145	727	Brass Br. PVD	1.340
720	Nickel PVD	1.141	246	Gold PVD	1.424
706	Black Metal PVD	1.256	716	Gold Br. PVD	1.424
707	Black Metal Br. PVD	1.340	845	Dark Bronze	1.340
030	Copper PVD	1.256	187	Aged Bronze	1.340
708	Copper Br. PVD	1.340	713	Antique Brass	1.340
735	Warm Bronze PVD	1.256	279	Matte White	1.145

58455

Paper-roll holder for horizontal/vertical installation.

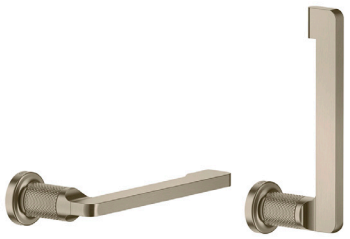

031	Chrome	549	726	Warm Bronze Br. PVD	866
149	Finox Br. Nickel	741	710	Brass PVD	812
299	Matte Black	741	727	Brass Br. PVD	866
720	Nickel PVD	812	246	Gold PVD	923
706	Black Metal PVD	812	716	Gold Br. PVD	923
707	Black Metal Br. PVD	866	845	Dark Bronze	866
030	Copper PVD	812	187	Aged Bronze	866
708	Copper Br. PVD	866	713	Antique Brass	866
735	Warm Bronze PVD	812			

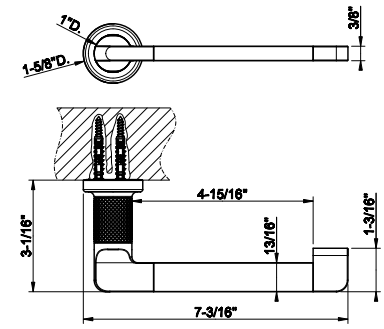

58497

12" towel rail.



031	Chrome	772	726	Warm Bronze Br. PVD	1.219
149	Finox Br. Nickel	1.044	710	Brass PVD	1.142
299	Matte Black	1.044	727	Brass Br. PVD	1.219
720	Nickel PVD	1.142	246	Gold PVD	1.298
706	Black Metal PVD	1.142	716	Gold Br. PVD	1.298
707	Black Metal Br. PVD	1.219	845	Dark Bronze	1.219
030	Copper PVD	1.142	187	Aged Bronze	1.219
708	Copper Br. PVD	1.219	713	Antique Brass	1.219
735	Warm Bronze PVD	1.142			

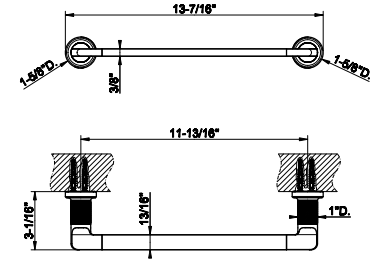

58500

18" towel rail.



031	Chrome	810	726	Warm Bronze Br. PVD	1.279
149	Finox Br. Nickel	1.093	710	Brass PVD	1.199
299	Matte Black	1.093	727	Brass Br. PVD	1.279
720	Nickel PVD	1.199	246	Gold PVD	1.360
706	Black Metal PVD	1.199	716	Gold Br. PVD	1.360
707	Black Metal Br. PVD	1.279	845	Dark Bronze	1.279
030	Copper PVD	1.199	187	Aged Bronze	1.279
708	Copper Br. PVD	1.279	713	Antique Brass	1.279
735	Warm Bronze PVD	1.199			

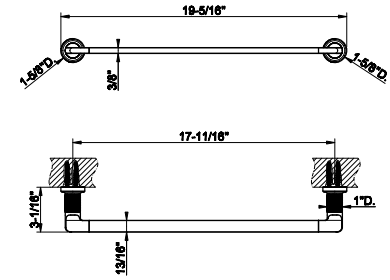

58503

24" towel rail.



031	Chrome	863	726	Warm Bronze Br. PVD	1.364
149	Finox Br. Nickel	1.165	710	Brass PVD	1.277
299	Matte Black	1.165	727	Brass Br. PVD	1.364
720	Nickel PVD	1.277	246	Gold PVD	1.448
706	Black Metal PVD	1.277	716	Gold Br. PVD	1.448
707	Black Metal Br. PVD	1.364	845	Dark Bronze	1.364
030	Copper PVD	1.277	187	Aged Bronze	1.364
708	Copper Br. PVD	1.364	713	Antique Brass	1.364
735	Warm Bronze PVD	1.277			

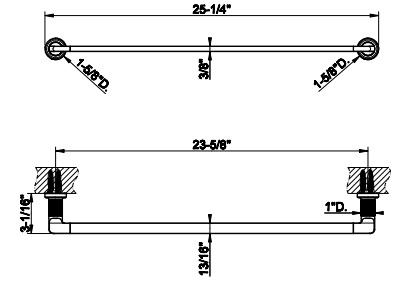

INCISO ACCESSORIES

58505

31-1/2” towel rail.

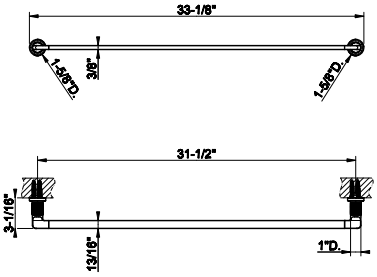

031	Chrome	957	726	Warm Bronze Br. PVD	1.513
149	Finox Br. Nickel	1.293	710	Brass PVD	1.417
299	Matte Black	1.293	727	Brass Br. PVD	1.513
720	Nickel PVD	1.417	246	Gold PVD	1.608
706	Black Metal PVD	1.417	716	Gold Br. PVD	1.608
707	Black Metal Br. PVD	1.513	845	Dark Bronze	1.513
030	Copper PVD	1.417	187	Aged Bronze	1.513
708	Copper Br. PVD	1.513	713	Antique Brass	1.513
735	Warm Bronze PVD	1.417			



58509

Towel ring.

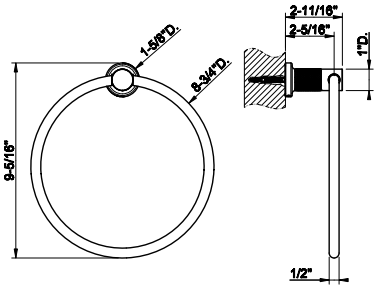

031	Chrome	450	726	Warm Bronze Br. PVD	711
149	Finox Br. Nickel	608	710	Brass PVD	665
299	Matte Black	608	727	Brass Br. PVD	711
720	Nickel PVD	665	246	Gold PVD	756
706	Black Metal PVD	665	716	Gold Br. PVD	756
707	Black Metal Br. PVD	711	845	Dark Bronze	711
030	Copper PVD	665	187	Aged Bronze	711
708	Copper Br. PVD	711	713	Antique Brass	711
735	Warm Bronze PVD	665			



58521

Wall-mounted robe hook.

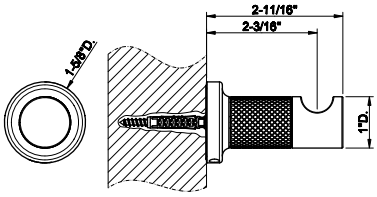

031	Chrome	217	726	Warm Bronze Br. PVD	341
149	Finox Br. Nickel	291	710	Brass PVD	319
299	Matte Black	291	727	Brass Br. PVD	341
720	Nickel PVD	319	246	Gold PVD	363
706	Black Metal PVD	319	716	Gold Br. PVD	363
707	Black Metal Br. PVD	341	845	Dark Bronze	341
030	Copper PVD	319	187	Aged Bronze	341
708	Copper Br. PVD	341	713	Antique Brass	341
735	Warm Bronze PVD	319			



58613

Towel rail for glass fixing - 12” length

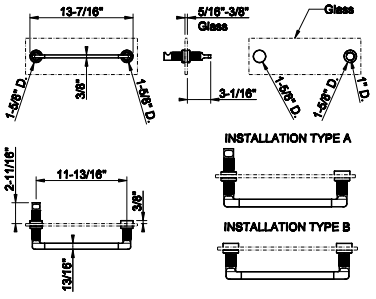

031	Chrome	1.109	726	Warm Bronze Br. PVD	1.751
149	Finox Br. Nickel	1.495	710	Brass PVD	1.639
299	Matte Black	1.495	727	Brass Br. PVD	1.751
720	Nickel PVD	1.639	246	Gold PVD	1.861
706	Black Metal PVD	1.639	716	Gold Br. PVD	1.861
707	Black Metal Br. PVD	1.751	845	Dark Bronze	1.751
030	Copper PVD	1.639	187	Aged Bronze	1.751
708	Copper Br. PVD	1.751	713	Antique Brass	1.751
735	Warm Bronze PVD	1.639			



58615

Towel rail for glass fixing - 18” length

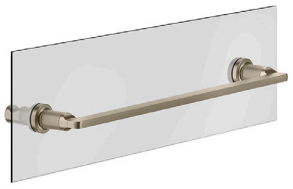

031	Chrome	1.230	726	Warm Bronze Br. PVD	1.942
149	Finox Br. Nickel	1.660	710	Brass PVD	1.820
299	Matte Black	1.660	727	Brass Br. PVD	1.942
720	Nickel PVD	1.820	246	Gold PVD	2.064
706	Black Metal PVD	1.820	716	Gold Br. PVD	2.064
707	Black Metal Br. PVD	1.942	845	Dark Bronze	1.942
030	Copper PVD	1.820	187	Aged Bronze	1.942
708	Copper Br. PVD	1.942	713	Antique Brass	1.942
735	Warm Bronze PVD	1.820			

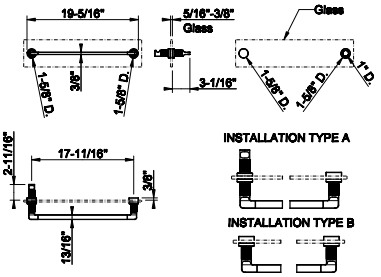

58617

Towel rail for glass fixing - 24” length



031	Chrome	1.288	726	Warm Bronze Br. PVD	2.036
149	Finox Br. Nickel	1.740	710	Brass PVD	1.908
299	Matte Black	1.740	727	Brass Br. PVD	2.036
720	Nickel PVD	1.908	246	Gold PVD	2.166
706	Black Metal PVD	1.908	716	Gold Br. PVD	2.166
707	Black Metal Br. PVD	2.036	845	Dark Bronze	2.036
030	Copper PVD	1.908	187	Aged Bronze	2.036
708	Copper Br. PVD	2.036	713	Antique Brass	2.036
735	Warm Bronze PVD	1.908			

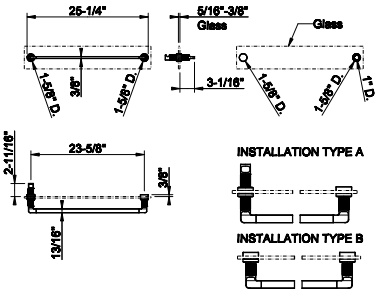

58423

Safety grip-handle for bathtub and shower enclosure, 45 cm length



031	Chrome	2.033	726	Warm Bronze Br. PVD	3.233
149	Finox Br. Nickel	2.743	710	Brass PVD	3.005
299	Matte Black	2.743	727	Brass Br. PVD	3.233
720	Nickel PVD	3.005	246	Gold PVD	3.413
706	Black Metal PVD	3.005	716	Gold Br. PVD	3.413
707	Black Metal Br. PVD	3.233	845	Dark Bronze	3.212
030	Copper PVD	3.005	187	Aged Bronze	3.233
708	Copper Br. PVD	3.233	713	Antique Brass	3.233
735	Warm Bronze PVD	3.005			

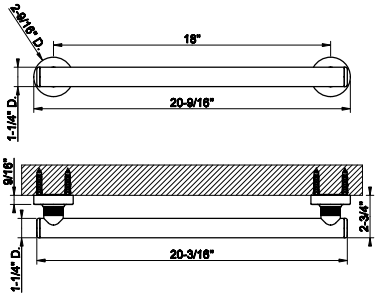

58424

Safety grip-handle for bathtub and shower enclosure
• 18” length



031	Chrome	1.932	726	Warm Bronze Br. PVD	3.054
149	Finox Br. Nickel	2.611	710	Brass PVD	2.862
299	Matte Black	2.611	727	Brass Br. PVD	3.056
720	Nickel PVD	2.862	246	Gold PVD	3.243
706	Black Metal PVD	2.862	716	Gold Br. PVD	3.243
707	Black Metal Br. PVD	3.056	845	Dark Bronze	3.056
030	Copper PVD	2.862	187	Aged Bronze	3.056
708	Copper Br. PVD	3.056	713	Antique Brass	3.056
735	Warm Bronze PVD	2.862	279	Matte White	2.611

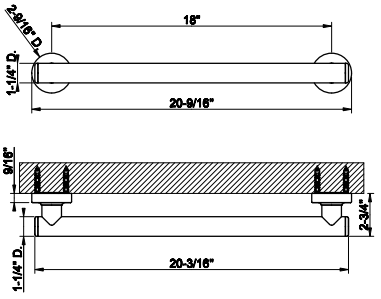

INCISO ACCESSORIES

58430

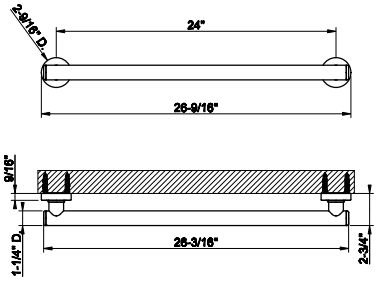

Safety grip-handle for bathtub and shower enclosure
• 24” length



031	Chrome	1.967	726	Warm Bronze Br. PVD	3.108
149	Finox Br. Nickel	2.656	710	Brass PVD	2.911
299	Matte Black	2.656	727	Brass Br. PVD	3.108
720	Nickel PVD	2.911	246	Gold PVD	3.304
706	Black Metal PVD	2.911	716	Gold Br. PVD	3.304
707	Black Metal Br. PVD	3.108	845	Dark Bronze	3.108
030	Copper PVD	2.911	187	Aged Bronze	3.108
708	Copper Br. PVD	3.108	713	Antique Brass	3.108
735	Warm Bronze PVD	2.911	279	Matte White	2.656

58432

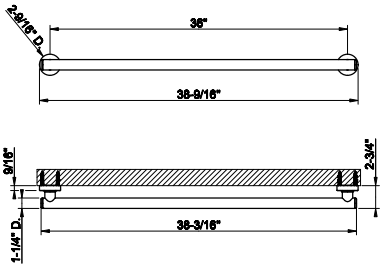

Safety grip-handle for bathtub and shower enclosure
• 36” length



031	Chrome	2.165	726	Warm Bronze Br. PVD	3.419
149	Finox Br. Nickel	2.921	710	Brass PVD	3.203
299	Matte Black	2.921	727	Brass Br. PVD	3.419
720	Nickel PVD	3.203	246	Gold PVD	3.637
706	Black Metal PVD	3.203	716	Gold Br. PVD	3.637
707	Black Metal Br. PVD	3.419	845	Dark Bronze	3.419
030	Copper PVD	3.203	187	Aged Bronze	3.419
708	Copper Br. PVD	3.419	713	Antique Brass	3.419
735	Warm Bronze PVD	3.203	279	Matte White	2.921



INCISO
TOTAL LOOK

54611



Flush Actuator Plate
•Stainless steel
•Compatible with GEBERIT models: 111.597.001, 111.902.005, 111.798.00.1, 111.335.00.5
•Without visible fixing system

031	Chrome	1.228	708	Copper Br. PVD	1.813
239	Steel Br.	1.228	735	Warm Bronze PVD	1.813
275	Matte Cipria	1.653	726	Warm Bronze Br. PVD	1.813
273	Matte Greige	1.653	710	Brass PVD	1.813
280	Matte Ocra	1.653	727	Brass Br. PVD	1.813
281	Matte Coral	1.653	246	Gold PVD	2.058
276	Matte Agave	1.653	716	Gold Br. PVD	2.058
299	Matte Black	1.653	845	Dark Bronze	1.813
720	Nickel PVD	1.813	187	Aged Bronze	1.813
706	Black Metal PVD	1.813	713	Antique Brass	1.813
707	Black Metal Br. PVD	1.813	279	Matte White	1.653
030	Copper PVD	1.813			

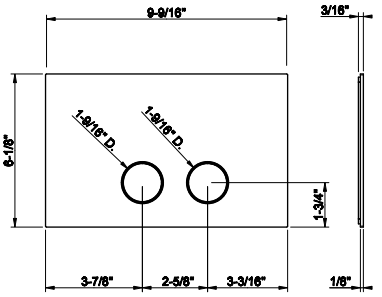

54601



Counter washbasin In stainless steel, without overflow waste. Without basin waste. It can be combined with waste 54597.

239	Steel Br.	2.449	708	Copper Br. PVD	6.986
299	Matte Black	4.431	726	Warm Bronze Br. PVD	6.986
707	Black Metal Br. PVD	6.986	727	Brass Br. PVD	6.986

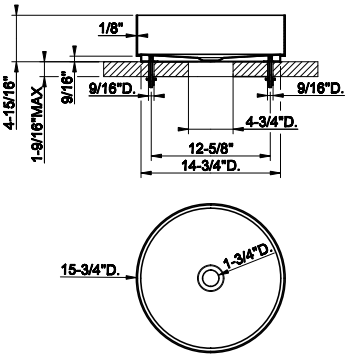

01578



Undermounted washbasin brackets for 54601, 54605, 54606.

031	Chrome	428

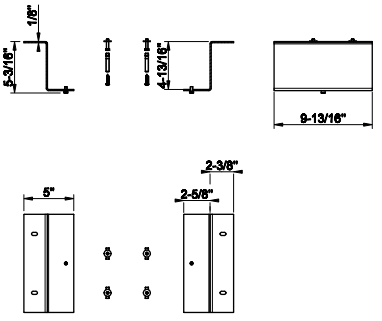

54597



1 1/4" push drain with or without overflow feature
- Recommended for Gessi 316 Collection

239	Steel Br.	212	708	Copper Br. PVD	313
299	Matte Black	287	726	Warm Bronze Br. PVD	313
707	Black Metal Br. PVD	313	727	Brass Br. PVD	313

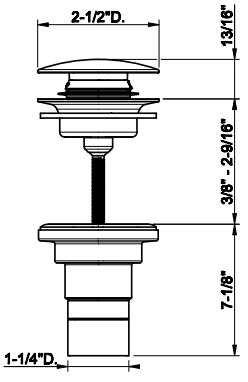

INCISO TOTAL LOOK

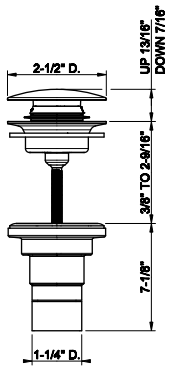

01427

1 1/4" push drain with or without overflow feature



031	Chrome	134	030	Copper PVD	379
239	Steel Br.	134	708	Copper Br. PVD	379
275	Matte Cipria	326	735	Warm Bronze PVD	379
273	Matte Greige	326	726	Warm Bronze Br. PVD	379
277	Glossy Ocra	326	710	Brass PVD	379
278	Glossy Coral	326	727	Brass Br. PVD	379
276	Matte Agave	326	246	Gold PVD	405
299	Matte Black	386	716	Gold Br. PVD	405
720	Nickel PVD	379	845	Dark Bronze	379
706	Black Metal PVD	379	187	Aged Bronze	379
707	Black Metal Br. PVD	379	713	Antique Brass	379

GESSI



VENTI20

65001



Single lever washbasin mixer with pop-up assembly
- Spout projection 5-1/4”
- Height 6-5/8”
- 1-1/4” D. pop-up drain and flexiblehoses with 9/16” – 24 UNEF connections.
- Max flow rate 1.2 GPM
- ADA compliant

031	Chrome	1.406	735	Warm Bronze PVD	2.079
149	Finox Br. Nickel	1.897	726	Warm Bronze Br. PVD	2.219
299	Matte Black	1.897	710	Brass PVD	2.079
720	Nickel PVD	2.079	727	Brass Br. PVD	2.219
706	Black Metal PVD	2.079	246	Gold PVD	2.363
707	Black Metal Br. PVD	2.219	716	Gold Br. PVD	2.363
030	Copper PVD	2.079	187	Aged Bronze	2.219
708	Copper Br. PVD	2.219	713	Antique Brass	2.219

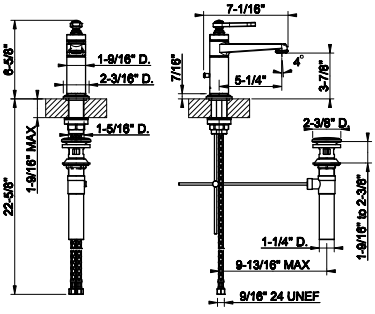

65002



Single lever washbasin mixer without pop-up assembly
- Spout projection 5-1/4”
- Height 6-5/8”
- Drain not included - See DRAINSsection
- Max flow rate 1.2 GPM
- ADA compliant

031	Chrome	1.271	735	Warm Bronze PVD	1.882
149	Finox Br. Nickel	1.717	726	Warm Bronze Br. PVD	2.010
299	Matte Black	1.717	710	Brass PVD	1.882
720	Nickel PVD	1.882	727	Brass Br. PVD	2.010
706	Black Metal PVD	1.882	246	Gold PVD	2.136
707	Black Metal Br. PVD	2.010	716	Gold Br. PVD	2.136
030	Copper PVD	1.882	187	Aged Bronze	2.010
708	Copper Br. PVD	2.010	713	Antique Brass	2.010

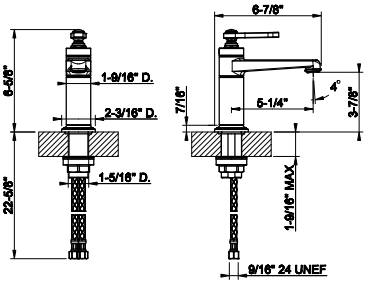

65003



Tall single lever washbasin mixer with pop-up assembly
- Spout projection 8-3/16”
- Height 12-7/16”
- 1-1/4” D. pop-up drain andflexible hoses with 9/16” – 24 UNEF connections
- Max flow rate 1.2 GPM
- ADA compliant

031	Chrome	1.688	735	Warm Bronze PVD	2.495
149	Finox Br. Nickel	2.275	726	Warm Bronze Br. PVD	2.663
299	Matte Black	2.275	710	Brass PVD	2.495
720	Nickel PVD	2.495	727	Brass Br. PVD	2.663
706	Black Metal PVD	2.495	246	Gold PVD	2.836
707	Black Metal Br. PVD	2.663	716	Gold Br. PVD	2.836
030	Copper PVD	2.495	187	Aged Bronze	2.663
708	Copper Br. PVD	2.663	713	Antique Brass	2.663

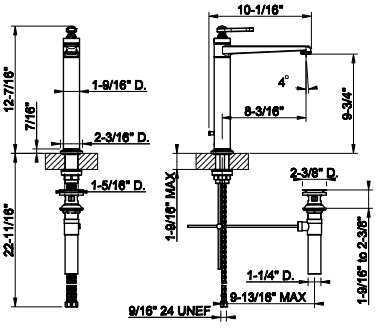

65004



Tall single lever washbasin mixer without pop-up assembly
- Spout projection 8-3/16”
- Height 12-7/16”
- Drain not included - SeeDRAINS section
- Max flow rate 1.2 GPM
- ADA compliant

031	Chrome	1.558	735	Warm Bronze PVD	2.306
149	Finox Br. Nickel	2.104	726	Warm Bronze Br. PVD	2.460
299	Matte Black	2.104	710	Brass PVD	2.306
720	Nickel PVD	2.306	727	Brass Br. PVD	2.460
706	Black Metal PVD	2.306	246	Gold PVD	2.618
707	Black Metal Br. PVD	2.460	716	Gold Br. PVD	2.618
030	Copper PVD	2.306	187	Aged Bronze	2.460
708	Copper Br. PVD	2.460	713	Antique Brass	2.460

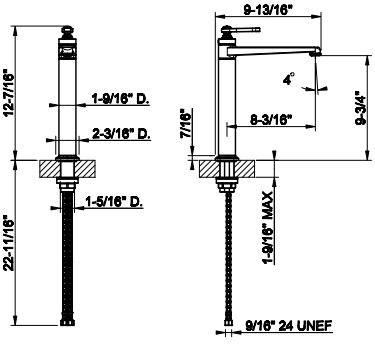

65011

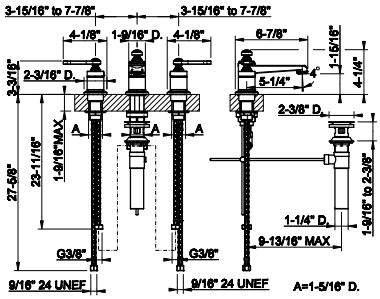

Widespread washbasin mixer with pop-up assembly
- Spout projection 5-1/4”
- Height 4-1/4”
- 1-1/4” D. pop-up drain and flexiblehoses with 9/16” – 24 UNEF connections.
- Max flow rate 1.2 GPM
- ADA compliant

031	Chrome	2.530	735	Warm Bronze PVD	3.746
149	Finox Br. Nickel	3.417	726	Warm Bronze Br. PVD	3.999
299	Matte Black	3.417	710	Brass PVD	3.746
720	Nickel PVD	3.746	727	Brass Br. PVD	3.999
706	Black Metal PVD	3.746	246	Gold PVD	4.251
707	Black Metal Br. PVD	3.999	716	Gold Br. PVD	4.251
030	Copper PVD	3.746	187	Aged Bronze	3.999
708	Copper Br. PVD	3.999	713	Antique Brass	3.999



65013

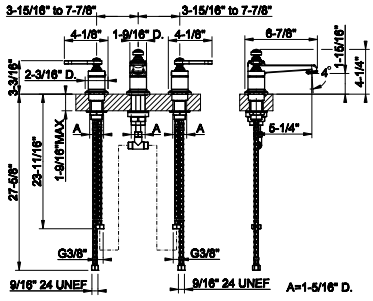

Widespread washbasin mixer without pop-up assembly
- Spout projection 5-1/4”
- Height 4-1/4”
- Drain not included - See DRAINS section
- Max flow rate 1.2 GPM
- ADA compliant

031	Chrome	2.410	735	Warm Bronze PVD	3.568
149	Finox Br. Nickel	3.254	726	Warm Bronze Br. PVD	3.808
299	Matte Black	3.254	710	Brass PVD	3.568
720	Nickel PVD	3.568	727	Brass Br. PVD	3.808
706	Black Metal PVD	3.568	246	Gold PVD	4.049
707	Black Metal Br. PVD	3.808	716	Gold Br. PVD	4.049
030	Copper PVD	3.568	187	Aged Bronze	3.808
708	Copper Br. PVD	3.808	713	Antique Brass	3.808



65012

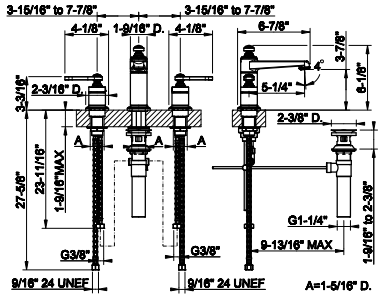

Widespread washbasin mixer with pop-up assembly
- Spout projection 5-1/4”
- Height 6-1/8”
- 1-1/4” D. pop-up drain and flexiblehoses with 9/16” – 24 UNEF connections.
- Max flow rate 1.2 GPM
- ADA compliant

031	Chrome	2.657	735	Warm Bronze PVD	3.932
149	Finox Br. Nickel	3.586	726	Warm Bronze Br. PVD	4.198
299	Matte Black	3.586	710	Brass PVD	3.932
720	Nickel PVD	3.932	727	Brass Br. PVD	4.198
706	Black Metal PVD	3.932	246	Gold PVD	4.464
707	Black Metal Br. PVD	4.198	716	Gold Br. PVD	4.464
030	Copper PVD	3.932	187	Aged Bronze	4.198
708	Copper Br. PVD	4.198	713	Antique Brass	4.198



65014

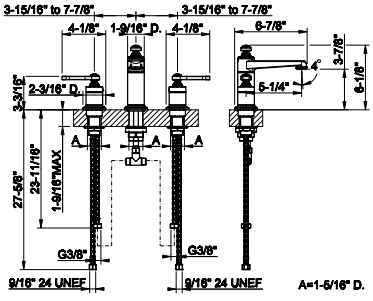

Widespread washbasin mixer without pop-up assembly
- Spout projection 5-1/4”
- Height 6-1/8”
- Drain not included - See DRAINS section
- Max flow rate 1.2 GPM
- ADA compliant

031	Chrome	2.530	735	Warm Bronze PVD	3.746
149	Finox Br. Nickel	3.417	726	Warm Bronze Br. PVD	3.999
299	Matte Black	3.417	710	Brass PVD	3.746
720	Nickel PVD	3.746	727	Brass Br. PVD	3.999
706	Black Metal PVD	3.746	246	Gold PVD	4.251
707	Black Metal Br. PVD	3.999	716	Gold Br. PVD	4.251
030	Copper PVD	3.746	187	Aged Bronze	3.999
708	Copper Br. PVD	3.999	713	Antique Brass	3.999





65015

Widespread washbasin mixer with pop-up assembly
- Spout projection 6-3/4”
- Height11-1/16”
- 1-1/4” D. pop-up drain and flexiblehoses with 9/16” – 24 UNEF connections.
- Max flow rate 1.2 GPM
- ADA compliant

031	Chrome	2.657	735	Warm Bronze PVD	3.932
149	Finox Br. Nickel	3.586	726	Warm Bronze Br. PVD	4.198
299	Matte Black	3.586	710	Brass PVD	3.932
720	Nickel PVD	3.932	727	Brass Br. PVD	4.198
706	Black Metal PVD	3.932	246	Gold PVD	4.464
707	Black Metal Br. PVD	4.198	716	Gold Br. PVD	4.464
030	Copper PVD	3.932	187	Aged Bronze	4.198
708	Copper Br. PVD	4.198	713	Antique Brass	4.198

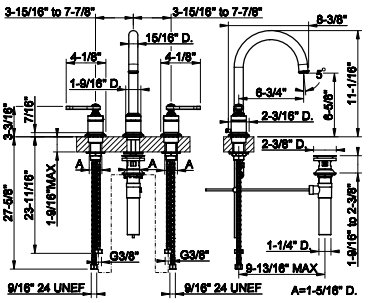



65016

Widespread washbasin mixer without pop-up assembly
- Spout projection 6-3/4”
- Height 11-1/16”
- Drain not included - See DRAINSsection
- Max flow rate 1.2 GPM
- ADA compliant

031	Chrome	2.530	735	Warm Bronze PVD	3.746
149	Finox Br. Nickel	3.417	726	Warm Bronze Br. PVD	3.999
299	Matte Black	3.417	710	Brass PVD	3.746
720	Nickel PVD	3.746	727	Brass Br. PVD	3.999
706	Black Metal PVD	3.746	246	Gold PVD	4.251
707	Black Metal Br. PVD	3.999	716	Gold Br. PVD	4.251
030	Copper PVD	3.746	187	Aged Bronze	3.999
708	Copper Br. PVD	3.999	713	Antique Brass	3.999

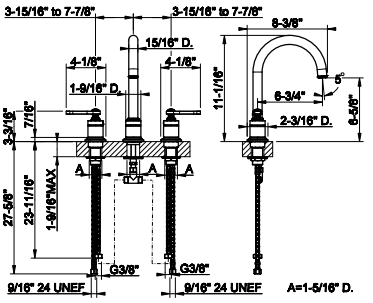

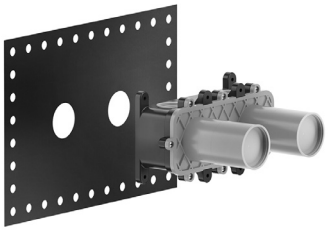

63397

Wall-mounted washbasin mixer rough valve
- Drain not included - See DRAINS section

239	Steel Br.	900

63397+65088

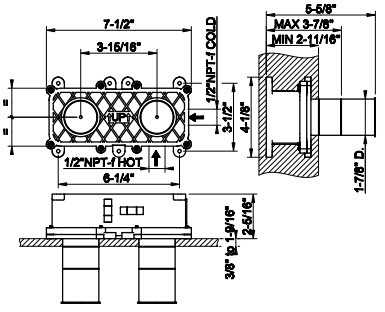



65088

TRIM PARTS ONLY Wall-mounted washbasin mixer trim
- Spout projection 9-9/16”
- Drain not included - See DRAINS section
- Requires in-wall rough valve 63397
- Max flow rate 1.2 GPM
- ADA compliant
- Handle kit

031	Chrome	1.416	735	Warm Bronze PVD	2.093
149	Finox Br. Nickel	1.908	726	Warm Bronze Br. PVD	2.234
299	Matte Black	1.908	710	Brass PVD	2.093
720	Nickel PVD	2.093	727	Brass Br. PVD	2.234
706	Black Metal PVD	2.093	246	Gold PVD	2.379
707	Black Metal Br. PVD	2.234	716	Gold Br. PVD	2.379
030	Copper PVD	2.093	187	Aged Bronze	2.234
708	Copper Br. PVD	2.234	713	Antique Brass	2.234

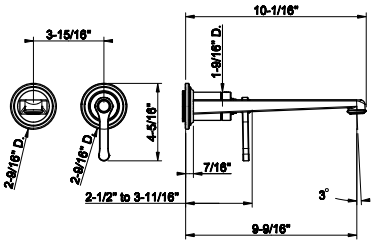

48089+65090

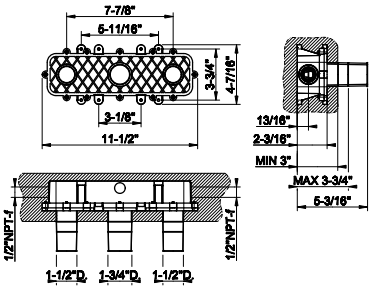

48089

Wall-mounted washbasin mixer rough valve
- Drain not included - See DRAINS section

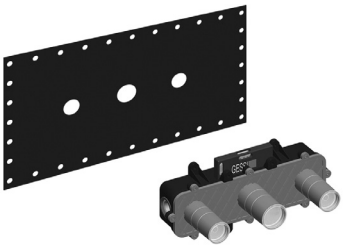

031	Chrome	1.069

65090

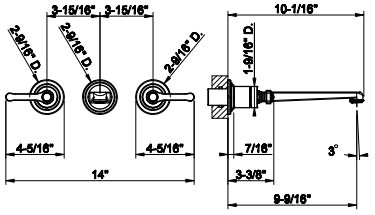

TRIM PARTS ONLY Wall-mounted washbasin mixer trim
- Spout projection 9-1/16"
- Drain not included - See DRAINS section
- Requires in-wall rough valve 48089
- Max flow rate 1.2 GPM
- ADA compliant



031	Chrome	2.144	735	Warm Bronze PVD	3.171
149	Finox Br. Nickel	2.894	726	Warm Bronze Br. PVD	3.386
299	Matte Black	2.894	710	Brass PVD	3.171
720	Nickel PVD	3.171	727	Brass Br. PVD	3.386
706	Black Metal PVD	3.171	246	Gold PVD	3.602
707	Black Metal Br. PVD	3.386	716	Gold Br. PVD	3.602
030	Copper PVD	3.171	187	Aged Bronze	3.386
708	Copper Br. PVD	3.386	713	Antique Brass	3.386

65023

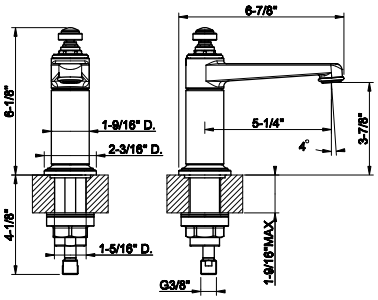

Deck-mounted washbasin spout only without pop-up assembly
- Spout projection 5-1/4"
- Height 6-1/8"
- 1/2" connections
- Drain notincluded - See DRAINS section
- Requires handle kit
- Max flow rate 1.2 GP



031	Chrome	1.199	735	Warm Bronze PVD	1.771
149	Finox Br. Nickel	1.615	726	Warm Bronze Br. PVD	1.892
299	Matte Black	1.615	710	Brass PVD	1.771
720	Nickel PVD	1.771	727	Brass Br. PVD	1.892
706	Black Metal PVD	1.771	246	Gold PVD	2.015
707	Black Metal Br. PVD	1.892	716	Gold Br. PVD	2.015
030	Copper PVD	1.771	187	Aged Bronze	1.892
708	Copper Br. PVD	1.892	713	Antique Brass	1.892

65025

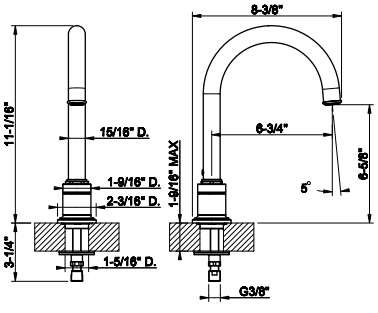

Deck-mounted washbasin spout only without pop-up assembly
- Spout projection 6-3/4"
- Height 11-1/16"
- 1/2" connections
- Drain not included - See DRAINS section
- Requires handle kit
- Max flow rate 1.2 GP



031	Chrome	1.199	735	Warm Bronze PVD	1.771
149	Finox Br. Nickel	1.615	726	Warm Bronze Br. PVD	1.892
299	Matte Black	1.615	710	Brass PVD	1.771
720	Nickel PVD	1.771	727	Brass Br. PVD	1.892
706	Black Metal PVD	1.771	246	Gold PVD	2.015
707	Black Metal Br. PVD	1.892	716	Gold Br. PVD	2.015
030	Copper PVD	1.771	187	Aged Bronze	1.892
708	Copper Br. PVD	1.892	713	Antique Brass	1.892

65101



Wall-mounted washbasin spout only
- Projection 9-9/16”
- 1/2” connections
- Drain not included - See DRAINS section
- Requires mixercontrol
- Max flow rate 1.2 GPM

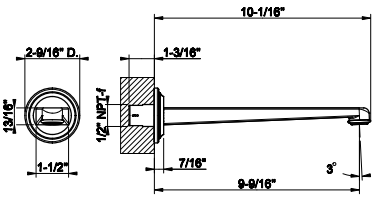

031	Chrome	725	735	Warm Bronze PVD	1.071
149	Finox Br. Nickel	977	726	Warm Bronze Br. PVD	1.144
299	Matte Black	977	710	Brass PVD	1.071
720	Nickel PVD	1.071	727	Brass Br. PVD	1.144
706	Black Metal PVD	1.071	246	Gold PVD	1.218
707	Black Metal Br. PVD	1.144	716	Gold Br. PVD	1.218
030	Copper PVD	1.071	187	Aged Bronze	1.144
708	Copper Br. PVD	1.144	713	Antique Brass	1.144

63399



Ceiling-mounted washbasin spout only
- Spout length 63”
- Drain not included - See DRAINS section
- Requires mixer control
- Maxflow rate 1.2 gpm

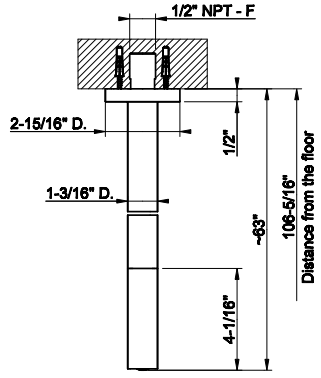

031	Chrome	1.777	030	Copper PVD	2.631
275	Matte Cipria	2.279	708	Copper Br. PVD	2.806
273	Matte Greige	2.279	735	Warm Bronze PVD	2.631
277	Glossy Ocra	2.666	726	Warm Bronze Br. PVD	2.806
278	Glossy Coral	2.666	710	Brass PVD	2.631
276	Matte Agave	2.279	727	Brass Br. PVD	2.806
149	Finox Br. Nickel	2.399	246	Gold PVD	2.986
299	Matte Black	2.399	716	Gold Br. PVD	2.986
720	Nickel PVD	2.631	845	Dark Bronze	2.666
706	Black Metal PVD	2.631	187	Aged Bronze	2.806
707	Black Metal Br. PVD	2.806	713	Antique Brass	2.806

VENTI20

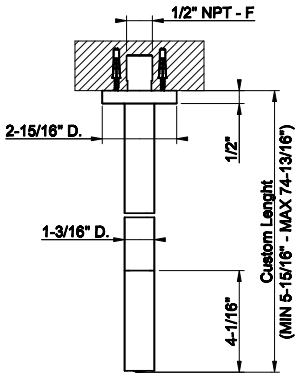

63499

Ceiling-mounted washbasin spout only
- Custom length: Minimum 5-15/16” - Maximum 74-13/16”
- Drain not included - See DRAINS section
- Requires mixer control
- Max flow rate 1.2 gpm



031	Chrome	2.548	030	Copper PVD	3.769
275	Matte Cipria	3.439	708	Copper Br. PVD	4.022
273	Matte Greige	3.439	735	Warm Bronze PVD	3.769
277	Glossy Ocra	3.439	726	Warm Bronze Br. PVD	4.022
278	Glossy Coral	3.439	710	Brass PVD	3.769
276	Matte Agave	3.439	727	Brass Br. PVD	4.022
149	Finox Br. Nickel	3.439	246	Gold PVD	4.281
299	Matte Black	3.439	716	Gold Br. PVD	4.281
720	Nickel PVD	3.769	845	Dark Bronze	4.022
706	Black Metal PVD	3.769	187	Aged Bronze	4.022
707	Black Metal Br. PVD	4.022	713	Antique Brass	4.022

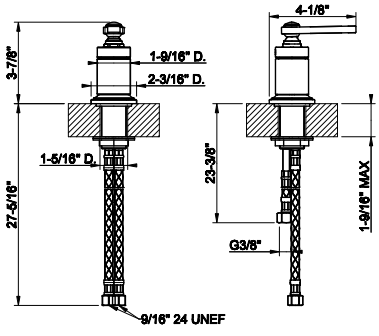

65100

Deck mounted washbasin mixer control
- 1/2” connections
- Drain not included
- ADA compliant



031	Chrome	838	735	Warm Bronze PVD	1.238
149	Finox Br. Nickel	1.130	726	Warm Bronze Br. PVD	1.321
299	Matte Black	1.130	710	Brass PVD	1.238
720	Nickel PVD	1.238	727	Brass Br. PVD	1.321
706	Black Metal PVD	1.238	246	Gold PVD	1.408
707	Black Metal Br. PVD	1.321	716	Gold Br. PVD	1.408
030	Copper PVD	1.238	187	Aged Bronze	1.321
708	Copper Br. PVD	1.321	713	Antique Brass	1.321

63412

In-wall for wall-mounted washbasin remote control. One-way

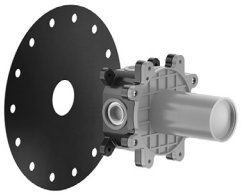

239	Steel Br.	516

63412+65109

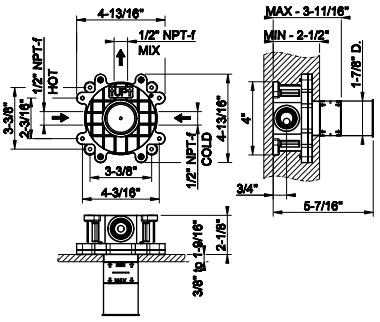

65109

TRIM PARTS ONLY Wall-mounted washbasin mixer control
- 1/2" connections
- Drain not included - See DRAINS section
- Requires in-wall rough valve 63412
- ADA compliant



031	Chrome	695	735	Warm Bronze PVD	1.024
149	Finox Br. Nickel	934	726	Warm Bronze Br. PVD	1.094
299	Matte Black	934	710	Brass PVD	1.024
720	Nickel PVD	1.024	727	Brass Br. PVD	1.094
706	Black Metal PVD	1.024	246	Gold PVD	1.168
707	Black Metal Br. PVD	1.094	716	Gold Br. PVD	1.168
030	Copper PVD	1.024	187	Aged Bronze	1.094
708	Copper Br. PVD	1.094	713	Antique Brass	1.094

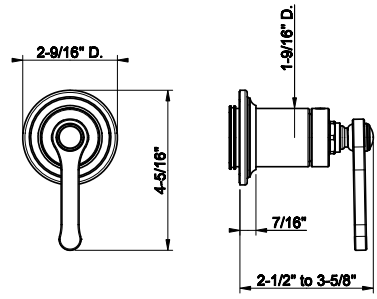

65113

Wall-mounted widespread bath group
- Tub filler spout
- Spout projection 8-11/16"
- Diverter
- Handshower with 59" flexible hose with fixed hook and 1.75 GPM
- 1/2" connections



031	Chrome	3.647	735	Warm Bronze PVD	5.395
149	Finox Br. Nickel	4.921	726	Warm Bronze Br. PVD	5.760
299	Matte Black	4.921	710	Brass PVD	5.395
720	Nickel PVD	5.395	727	Brass Br. PVD	5.760
706	Black Metal PVD	5.395	246	Gold PVD	6.127
707	Black Metal Br. PVD	5.760	716	Gold Br. PVD	6.127
030	Copper PVD	5.395	187	Aged Bronze	5.760
708	Copper Br. PVD	5.760	713	Antique Brass	5.760

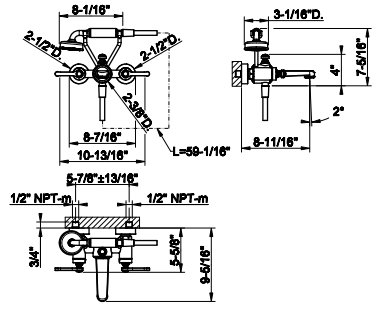

65115

Deck-mounted widespread bath group
- Tub filler spout
- Spout projection 9-13/16"
- Diverter
- Handshower with 59" flexible hose with fixed hook and 1.75 GPM
- 1/2" connections



031	Chrome	4.829	735	Warm Bronze PVD	7.143
149	Finox Br. Nickel	6.518	726	Warm Bronze Br. PVD	7.627
299	Matte Black	6.518	710	Brass PVD	7.143
720	Nickel PVD	7.143	727	Brass Br. PVD	7.627
706	Black Metal PVD	7.143	246	Gold PVD	8.113
707	Black Metal Br. PVD	7.627	716	Gold Br. PVD	8.113
030	Copper PVD	7.143	187	Aged Bronze	7.627
708	Copper Br. PVD	7.627	713	Antique Brass	7.627

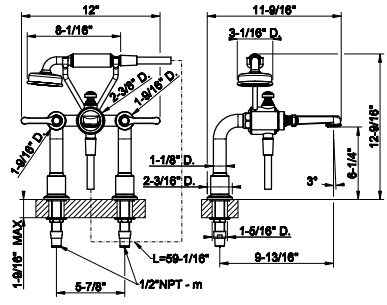

65099+65128

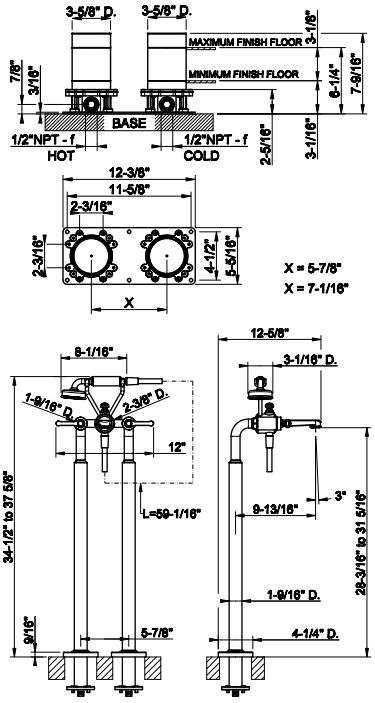

65099

Floor-mounted tub filler in-floor rough valve



031	Chrome	1.585

65128

TRIM PARTS ONLY Floor-mounted tub filler
- Handshower
- 59” flex hose
- Diverter
- Spout projection 9-13/16”
- Requires in-floor roughvalve 65099
- Handshower max flow rate 1.75 GPM
- Spout mixed flow rate 6 GPM at 60 PSI

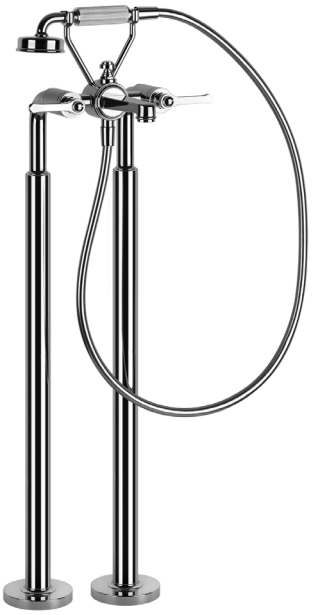

031	Chrome	7.310	735	Warm Bronze PVD	10.817
149	Finox Br. Nickel	9.866	726	Warm Bronze Br. PVD	11.546
299	Matte Black	9.866	710	Brass PVD	10.817
720	Nickel PVD	10.817	727	Brass Br. PVD	11.546
706	Black Metal PVD	10.817	246	Gold PVD	12.281
707	Black Metal Br. PVD	11.546	716	Gold Br. PVD	12.281
030	Copper PVD	10.817	187	Aged Bronze	11.546
708	Copper Br. PVD	11.546	713	Antique Brass	11.546

65045

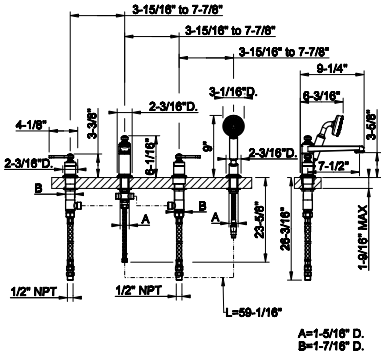

Four-hole roman tub set
- Diverter
- Spout - Projection 7-1/2”
- Handshower
- 59” flex hose
- Handshower max flow rate 1.75 GPM
- Spout: mixed flow rate 12 GPM at 60 PSI



031	Chrome	4.781	735	Warm Bronze PVD	7.078
149	Finox Br. Nickel	6.455	726	Warm Bronze Br. PVD	7.555
299	Matte Black	6.455	710	Brass PVD	7.078
720	Nickel PVD	7.078	727	Brass Br. PVD	7.555
706	Black Metal PVD	7.078	246	Gold PVD	8.033
707	Black Metal Br. PVD	7.555	716	Gold Br. PVD	8.033
030	Copper PVD	7.078	187	Aged Bronze	7.555
708	Copper Br. PVD	7.555	713	Antique Brass	7.555

65103



Wall-mounted bath spout only 1/2' connections
- Spout projection 8-1/4"
- Drain not included-See DRAINS section
- Requires mixercontrol
- Flow rate 11 GPM at 35 PSI

031	Chrome	933	735	Warm Bronze PVD	1.383
149	Finox Br. Nickel	1.261	726	Warm Bronze Br. PVD	1.475
299	Matte Black	1.261	710	Brass PVD	1.383
720	Nickel PVD	1.383	727	Brass Br. PVD	1.475
706	Black Metal PVD	1.383	246	Gold PVD	1.568
707	Black Metal Br. PVD	1.475	716	Gold Br. PVD	1.568
030	Copper PVD	1.383	187	Aged Bronze	1.475
708	Copper Br. PVD	1.475	713	Antique Brass	1.475

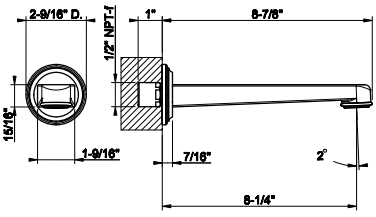

54055

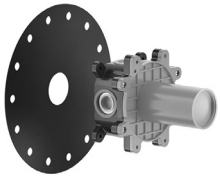

Wall-mounted Basin/bath mixer rough valve. One exit

239	Steel Br.	563

54055+65131

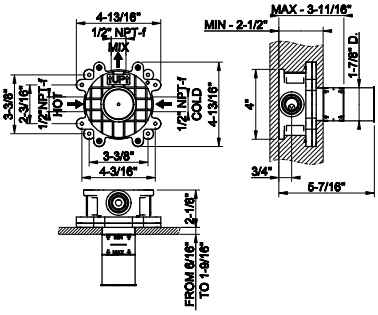

65131



TRIM PARTS ONLY Wall mounted mixer control
- For basin and bath spouts
- 1/2" connections
- Drain not included - see DRAINS section
- Requires in-wall rough valve 54055
- ADA compliant

031	Chrome	711	735	Warm Bronze PVD	1.050
149	Finox Br. Nickel	961	726	Warm Bronze Br. PVD	1.123
299	Matte Black	961	710	Brass PVD	1.050
720	Nickel PVD	1.050	727	Brass Br. PVD	1.123
706	Black Metal PVD	1.050	246	Gold PVD	1.195
707	Black Metal Br. PVD	1.123	716	Gold Br. PVD	1.195
030	Copper PVD	1.050	187	Aged Bronze	1.123
708	Copper Br. PVD	1.123	713	Antique Brass	1.123

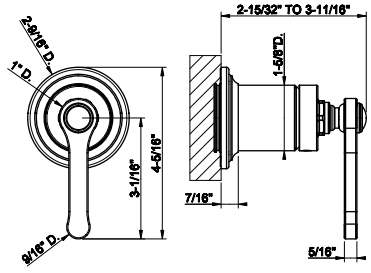

09279+65133

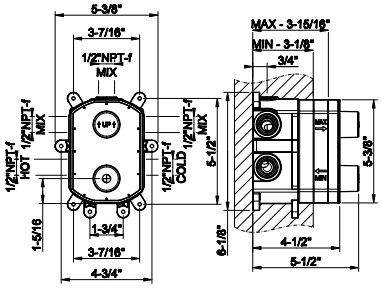

09279

In-wall thermostatic rough valve for 1/2/3-way diverter function
- 1/2” connections
- Vertical application
- Anti-scalding
- Non-Shared function

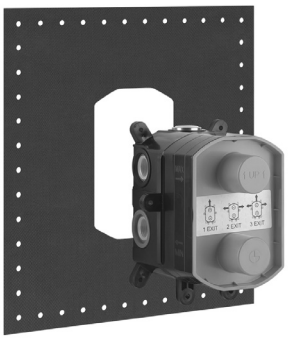

031	Chrome	877

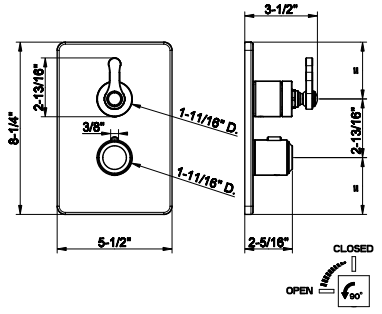

65133

TRIM PARTS ONLY External parts for thermostatic with single volume control
- Single backplate
- 1/2” connections
- Vertical application
- Anti-scalding
- Requires in-wall rough valve 09279



031	Chrome	2.206	735	Warm Bronze PVD	3.263
149	Finox Br. Nickel	2.977	726	Warm Bronze Br. PVD	3.483
299	Matte Black	2.977	710	Brass PVD	3.263
720	Nickel PVD	3.263	727	Brass Br. PVD	3.483
706	Black Metal PVD	3.263	246	Gold PVD	3.707
707	Black Metal Br. PVD	3.483	716	Gold Br. PVD	3.707
030	Copper PVD	3.263	187	Aged Bronze	3.483
708	Copper Br. PVD	3.483	713	Antique Brass	3.483

09279+65135

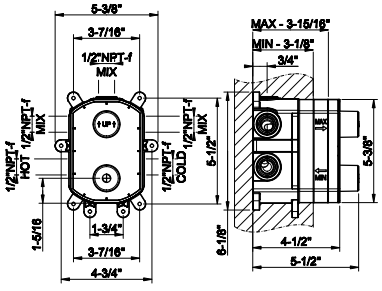

09279

In-wall thermostatic rough valve for 1/2/3-way diverter function
- 1/2” connections
- Vertical application
- Anti-scalding
- Non-Shared function

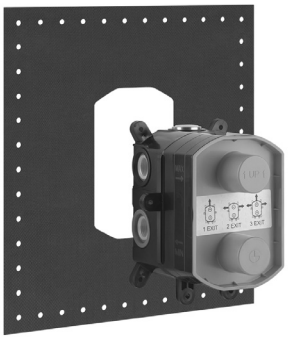

031	Chrome	877

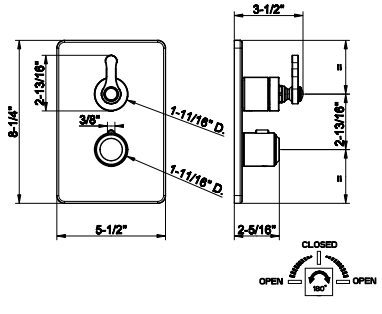

65135

TRIM PARTS ONLY External parts for 2-way thermostatic diverter and volume control
- Single backplate
- 1/2” connections
- Verticalapplication
- Anti-scalding
- Requires in-wall rough valve 09279



031	Chrome	2.206	735	Warm Bronze PVD	3.263
149	Finox Br. Nickel	2.977	726	Warm Bronze Br. PVD	3.483
299	Matte Black	2.977	710	Brass PVD	3.263
720	Nickel PVD	3.263	727	Brass Br. PVD	3.483
706	Black Metal PVD	3.263	246	Gold PVD	3.707
707	Black Metal Br. PVD	3.483	716	Gold Br. PVD	3.707
030	Copper PVD	3.263	187	Aged Bronze	3.483
708	Copper Br. PVD	3.483	713	Antique Brass	3.483

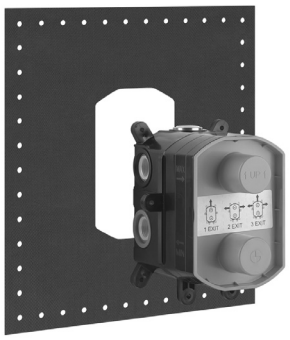

09279

In-wall thermostatic rough valve for 1/2/3-way diverter function
- 1/2” connections
- Vertical application
- Anti-scalding
- Non-Shared function

031	Chrome	877

09279+65137

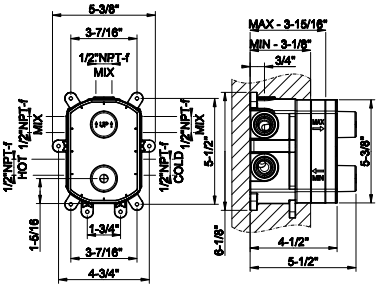



65137

TRIM PARTS ONLY External parts for 3-way thermostatic diverter and volume control
- Single backplate
- 1/2” connections
- Verticalapplication
- Anti-scalding
- Requires in-wall rough valve 09279

031	Chrome	2.206	735	Warm Bronze PVD	3.263
149	Finox Br. Nickel	2.977	726	Warm Bronze Br. PVD	3.483
299	Matte Black	2.977	710	Brass PVD	3.263
720	Nickel PVD	3.263	727	Brass Br. PVD	3.483
706	Black Metal PVD	3.263	246	Gold PVD	3.707
707	Black Metal Br. PVD	3.483	716	Gold Br. PVD	3.707
030	Copper PVD	3.263	187	Aged Bronze	3.483
708	Copper Br. PVD	3.483	713	Antique Brass	3.483

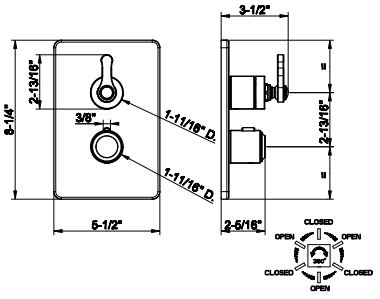



09272

In-wall single exit pressure balance rough valve
- 1/2” connections

031	Chrome	371

09272+65172

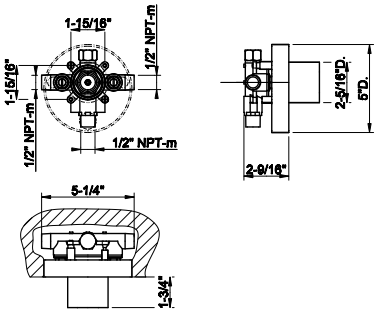



65172

TRIM PARTS ONLY External parts for single exit pressure
- Single backplate
- 1/2” connections
- Requires in-wall rough valve 09272

031	Chrome	1.049	735	Warm Bronze PVD	1.553
149	Finox Br. Nickel	1.417	726	Warm Bronze Br. PVD	1.659
299	Matte Black	1.417	710	Brass PVD	1.553
720	Nickel PVD	1.553	727	Brass Br. PVD	1.659
706	Black Metal PVD	1.553	246	Gold PVD	1.763
707	Black Metal Br. PVD	1.659	716	Gold Br. PVD	1.763
030	Copper PVD	1.553	187	Aged Bronze	1.659
708	Copper Br. PVD	1.659	713	Antique Brass	1.659

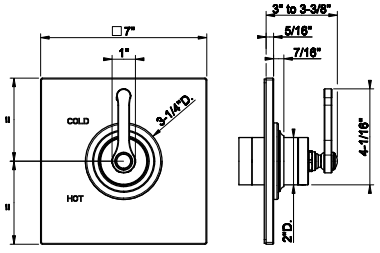

09274+65174

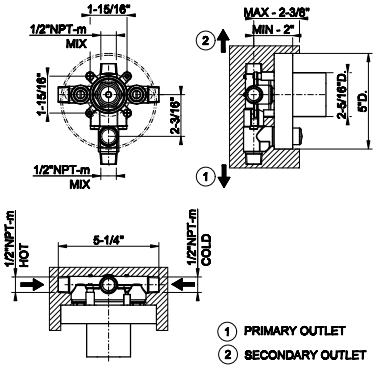

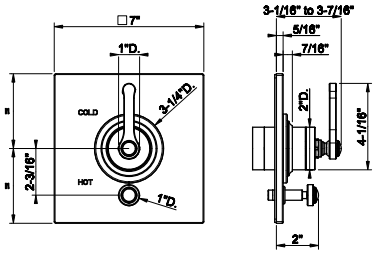

09274

In-wall pressure balance rough valve with 2-way diverter
- 1/2” connections
- Non-Shared Function



031	Chrome	443

65174

TRIM PARTS ONLY External parts for pressure balance with2-way diverter
- Single backplate
- 1/2” connections
- Requires in-wall rough valve 09274



031	Chrome	1.145	735	Warm Bronze PVD	1.694
149	Finox Br. Nickel	1.546	726	Warm Bronze Br. PVD	1.809
299	Matte Black	1.546	710	Brass PVD	1.694
720	Nickel PVD	1.694	727	Brass Br. PVD	1.809
706	Black Metal PVD	1.694	246	Gold PVD	1.924
707	Black Metal Br. PVD	1.809	716	Gold Br. PVD	1.924
030	Copper PVD	1.694	187	Aged Bronze	1.809
708	Copper Br. PVD	1.809	713	Antique Brass	1.809

39693+65200

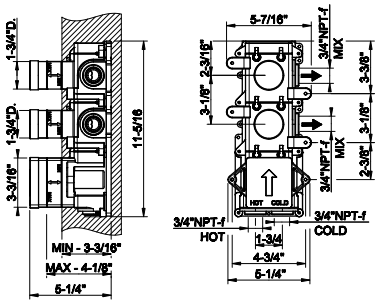

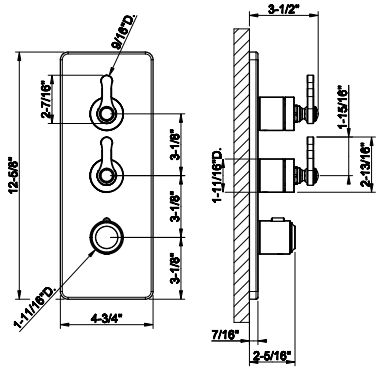

39693

In-wall thermostatic rough valve with 2 volume controls
- High capacity
- 3/4” connections
- Vertical/Horizontal application
- Anti-scalding

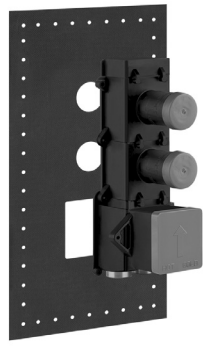

031	Chrome	1.903

65200

TRIM PARTS ONLY External parts for thermostatic with 2 volume controls
- Single backplate
- High capacity
- 3/4” connections
- Vertical/Horizontal application
- Anti-scalding
- Requires in-wall rough valve 39693



031	Chrome	2.399	735	Warm Bronze PVD	3.552
149	Finox Br. Nickel	3.240	726	Warm Bronze Br. PVD	3.791
299	Matte Black	3.240	710	Brass PVD	3.552
720	Nickel PVD	3.552	727	Brass Br. PVD	3.791
706	Black Metal PVD	3.552	246	Gold PVD	4.031
707	Black Metal Br. PVD	3.791	716	Gold Br. PVD	4.031
030	Copper PVD	3.552	187	Aged Bronze	3.791
708	Copper Br. PVD	3.791	713	Antique Brass	3.791

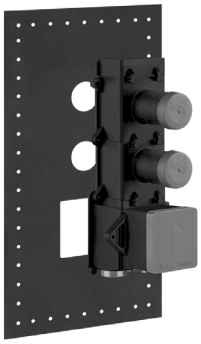

39693

In-wall thermostatic rough valve with 2 volume controls
- High capacity
- 3/4” connections
- Vertical/Horizontal application
- Anti-scalding

031	Chrome	1.903

39693+65202

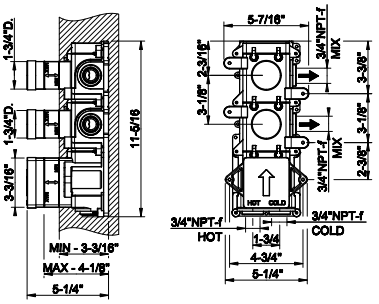



65202

TRIM PARTS ONLY External parts for thermostatic with 2 volume controls
- Separate backplate
- High capacity
- 3/4” connections
- Vertical/Horizontal application
- Anti-scalding
- Requires in-wall rough valve 39693

031	Chrome	2.712	735	Warm Bronze PVD	4.014
149	Finox Br. Nickel	3.662	726	Warm Bronze Br. PVD	4.285
299	Matte Black	3.662	710	Brass PVD	4.014
720	Nickel PVD	4.014	727	Brass Br. PVD	4.285
706	Black Metal PVD	4.014	246	Gold PVD	4.557
707	Black Metal Br. PVD	4.285	716	Gold Br. PVD	4.557
030	Copper PVD	4.014	187	Aged Bronze	4.285
708	Copper Br. PVD	4.285	713	Antique Brass	4.014

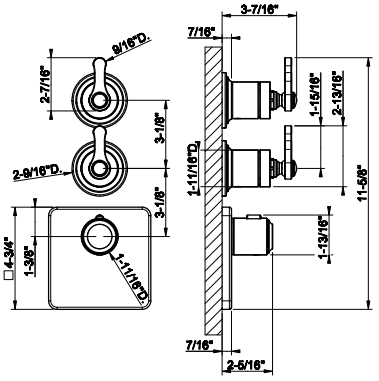

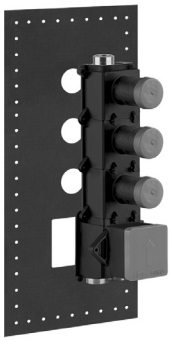

39695

In-wall thermostatic rough valve with 3 volume controls
- High capacity
- 3/4” connections
- Vertical/Horizontal application
- Anti-scalding

031	Chrome	2.197

39695+65204

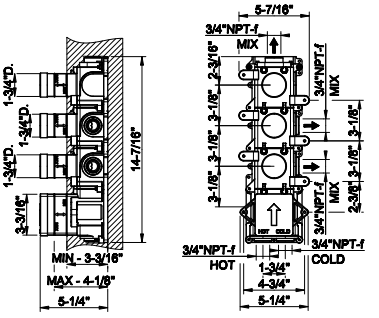



65204

TRIM PARTS ONLY External parts for thermostatic with 3 volume controls
- Single backplate
- High capacity
- 3/4” connections
- Vertical/Horizontal application
- Anti-scalding
- Requires in-wall rough valve 39695

031	Chrome	3.041	735	Warm Bronze PVD	4.502
149	Finox Br. Nickel	4.106	726	Warm Bronze Br. PVD	4.805
299	Matte Black	4.106	710	Brass PVD	4.502
720	Nickel PVD	4.502	727	Brass Br. PVD	4.805
706	Black Metal PVD	4.502	246	Gold PVD	5.109
707	Black Metal Br. PVD	4.805	716	Gold Br. PVD	5.109
030	Copper PVD	4.502	187	Aged Bronze	4.805
708	Copper Br. PVD	4.805	713	Antique Brass	4.805

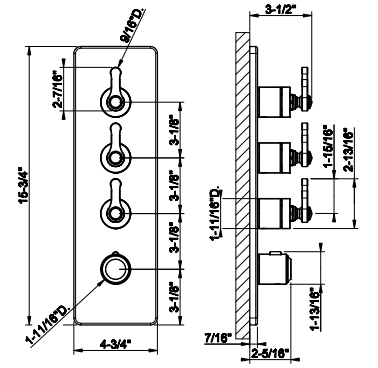

39695+65206

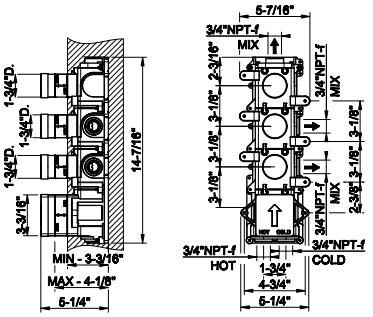

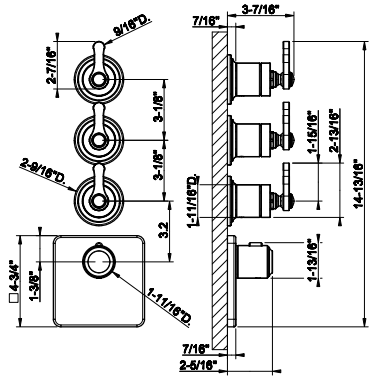

39695

In-wall thermostatic rough valve with 3 volume controls
- High capacity
- 3/4" connections
- Vertical/Horizontal application
- Anti-scalding

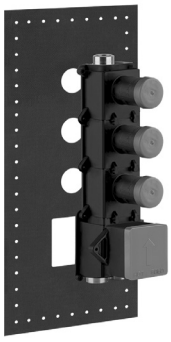

031	Chrome	2.197

65206

TRIM PARTS ONLY External parts for thermostatic with 3 volume controls
- Separate backplate
- High capacity
- 3/4" connections
- Vertical/Horizontal application
- Anti-scalding
- Requires in-wall rough valve 39695



031	Chrome	3.491	735	Warm Bronze PVD	5.166
149	Finox Br. Nickel	4.713	726	Warm Bronze Br. PVD	5.516
299	Matte Black	4.713	710	Brass PVD	5.166
720	Nickel PVD	5.166	727	Brass Br. PVD	5.516
706	Black Metal PVD	5.166	246	Gold PVD	5.865
707	Black Metal Br. PVD	5.516	716	Gold Br. PVD	5.865
030	Copper PVD	5.166	187	Aged Bronze	5.516
708	Copper Br. PVD	5.516	713	Antique Brass	5.516

39699+65208

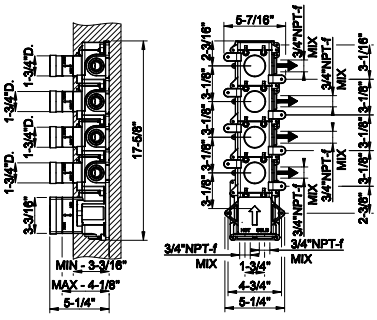

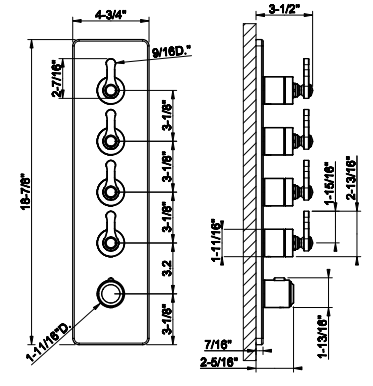

39699

In-wall thermostatic rough valve with 4 volume controls
- High capacity
- 3/4" connections
- Vertical/Horizontal application
- Anti-scalding
- Max flow rate 1.75 GPM

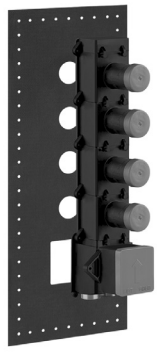

031	Chrome	2.498

65208

TRIM PARTS ONLY External parts for thermostatic with 4 volume controls
- Single backplate
- High capacity
- 3/4" connections
- Vertical/Horizontal application
- Anti-scalding
- Requires in-wall rough valve 39699



031	Chrome	3.647	735	Warm Bronze PVD	5.399
149	Finox Br. Nickel	4.924	726	Warm Bronze Br. PVD	5.763
299	Matte Black	4.924	710	Brass PVD	5.399
720	Nickel PVD	5.399	727	Brass Br. PVD	5.763
706	Black Metal PVD	5.399	246	Gold PVD	6.127
707	Black Metal Br. PVD	5.763	716	Gold Br. PVD	6.127
030	Copper PVD	5.399	187	Aged Bronze	5.763
708	Copper Br. PVD	5.763	713	Antique Brass	5.763

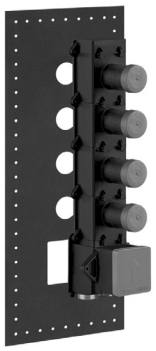

39699

In-wall thermostatic rough valve with 4 volume controls
- High capacity
- 3/4” connections
- Vertical/Horizontal application
- Anti-scalding
- Max flow rate 1.75 GPM

031	Chrome	2.498

39699+65210

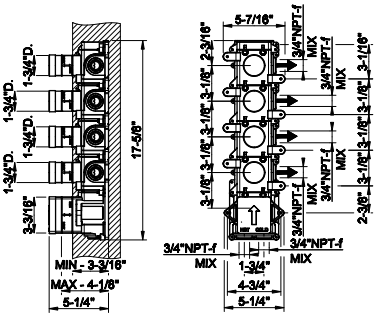



65210

TRIM PARTS ONLY External parts for thermostatic with 4 volume controls
- Separate backplate
- High capacity
- 3/4” connections
- Vertical/Horizontal application
- Anti-scalding
- Requires in-wall rough valve 39695

031	Chrome	4.269	735	Warm Bronze PVD	6.319
149	Finox Br. Nickel	5.764	726	Warm Bronze Br. PVD	6.745
299	Matte Black	5.764	710	Brass PVD	6.319
720	Nickel PVD	6.319	727	Brass Br. PVD	6.745
706	Black Metal PVD	6.319	246	Gold PVD	7.172
707	Black Metal Br. PVD	6.745	716	Gold Br. PVD	7.172
030	Copper PVD	6.319	187	Aged Bronze	6.745
708	Copper Br. PVD	6.745	713	Antique Brass	6.745

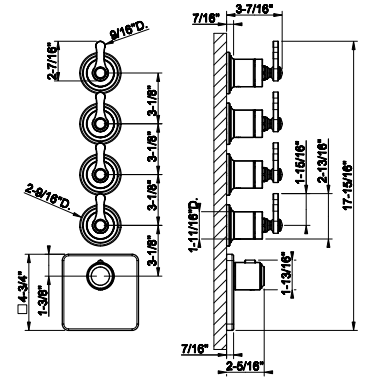

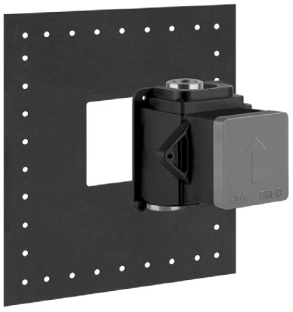

39681

In-wall thermostatic rough valve for individual mixer
- High capacity
- 3/4” connections
- Vertical/Horizontal application
- Anti-scalding

031	Chrome	1.169

39681+65316

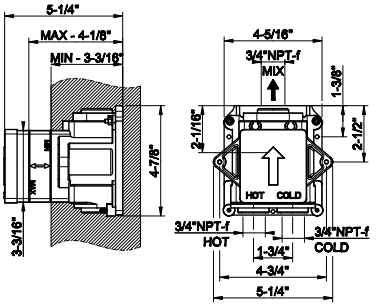



65316

TRIM PARTS ONLY External parts for individual thermostatic mixer
- High capacity
- 3/4” connections
- Vertical/Horizontal application
- Anti-scalding
- Requires in-wall rough valve 39681

031	Chrome	1.205	735	Warm Bronze PVD	1.783
149	Finox Br. Nickel	1.627	726	Warm Bronze Br. PVD	1.904
299	Matte Black	1.627	710	Brass PVD	1.783
720	Nickel PVD	1.783	727	Brass Br. PVD	1.904
706	Black Metal PVD	1.783	246	Gold PVD	2.025
707	Black Metal Br. PVD	1.904	716	Gold Br. PVD	2.025
030	Copper PVD	1.783	187	Aged Bronze	1.904
708	Copper Br. PVD	1.904	713	Antique Brass	1.904

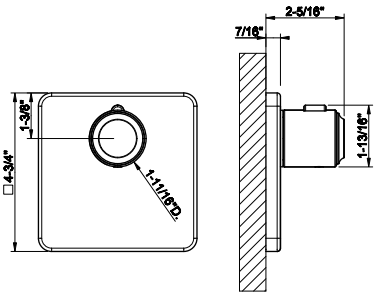

39683+65247

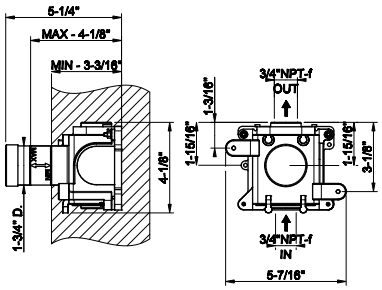

39683

In-wall thermostatic rough valve parts for volume control
- High capacity
- 3/4” connections
- Vertical/Horizontal application
- Anti-scalding

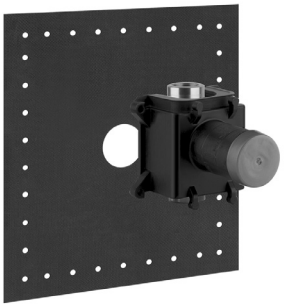

031	Chrome	582

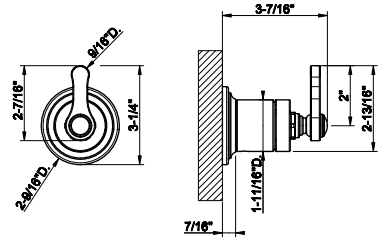

65247

TRIM PARTS ONLY External parts for individual thermostatic volume control
- High capacity
- 3/4” connections
- Vertical/Horizontalapplication
- Anti-scalding
- Requires in-wall rough valve 39683
- ADA compliant



031	Chrome	755	735	Warm Bronze PVD	1.117
149	Finox Br. Nickel	1.019	726	Warm Bronze Br. PVD	1.193
299	Matte Black	1.019	710	Brass PVD	1.117
720	Nickel PVD	1.117	727	Brass Br. PVD	1.193
706	Black Metal PVD	1.117	246	Gold PVD	1.269
707	Black Metal Br. PVD	1.193	716	Gold Br. PVD	1.269
030	Copper PVD	1.117	187	Aged Bronze	1.193
708	Copper Br. PVD	1.193	713	Antique Brass	1.193

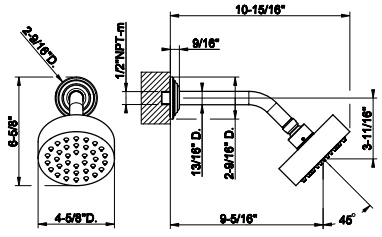

65156

Wall-mounted adjustable shower head with arm:
•1/2” connections
•Projection from wall to center 9-5/16”
•Total projection 10-15/16”
•Max flow rate 1.75 gpm



031	Chrome	1.759	735	Warm Bronze PVD	2.604
149	Finox Br. Nickel	2.375	726	Warm Bronze Br. PVD	2.779
299	Matte Black	2.375	710	Brass PVD	2.604
720	Nickel PVD	2.604	727	Brass Br. PVD	2.779
706	Black Metal PVD	2.604	246	Gold PVD	2.956
707	Black Metal Br. PVD	2.779	716	Gold Br. PVD	2.956
030	Copper PVD	2.604	187	Aged Bronze	2.779
708	Copper Br. PVD	2.779	713	Antique Brass	2.779

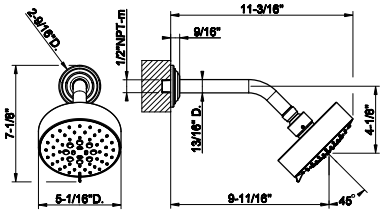

65158

Wall-mounted adjustable multi-function shower head with arm:
•1/2” connections
•Projection from wall to center 9-11/16”
•Total projection 11-3/16”
•Max flow rate 1.75 gpm



031	Chrome	2.111	735	Warm Bronze PVD	3.124
149	Finox Br. Nickel	2.850	726	Warm Bronze Br. PVD	3.334
299	Matte Black	2.850	710	Brass PVD	3.124
720	Nickel PVD	3.124	727	Brass Br. PVD	3.334
706	Black Metal PVD	3.124	246	Gold PVD	3.547
707	Black Metal Br. PVD	3.334	716	Gold Br. PVD	3.547
030	Copper PVD	3.124	187	Aged Bronze	3.334
708	Copper Br. PVD	3.334	713	Antique Brass	3.334

65148



Wall-mounted adjustable shower head with arm.
- 1/2” connections.
- Projection from wall to center 15-5/16”
- Total projection 19-13/16”
- Max flow rate 1.75 GPM

031	Chrome	2.535	735	Warm Bronze PVD	3.753
149	Finox Br. Nickel	3.423	726	Warm Bronze Br. PVD	4.005
299	Matte Black	3.423	710	Brass PVD	3.753
720	Nickel PVD	3.753	727	Brass Br. PVD	4.005
706	Black Metal PVD	3.753	246	Gold PVD	4.259
707	Black Metal Br. PVD	4.005	716	Gold Br. PVD	4.259
030	Copper PVD	3.753	187	Aged Bronze	4.005
708	Copper Br. PVD	4.005	713	Antique Brass	4.005

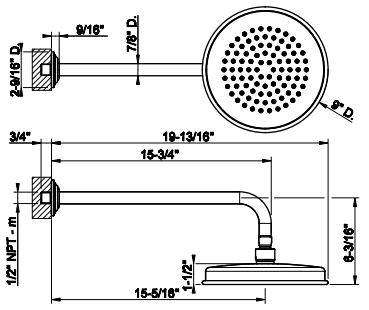

65149



Wall-mounted adjustable shower head with arm.
- 1/2” connections.
- Projection from wall to center 15-5/16”
- Total projection 21-3/4”
- Max flow rate 1.75 GPM

031	Chrome	3.802	735	Warm Bronze PVD	5.625
149	Finox Br. Nickel	5.132	726	Warm Bronze Br. PVD	6.007
299	Matte Black	5.132	710	Brass PVD	5.625
720	Nickel PVD	5.625	727	Brass Br. PVD	6.007
706	Black Metal PVD	5.625	246	Gold PVD	6.388
707	Black Metal Br. PVD	6.007	716	Gold Br. PVD	6.388
030	Copper PVD	5.625	187	Aged Bronze	6.007
708	Copper Br. PVD	6.007	713	Antique Brass	6.007

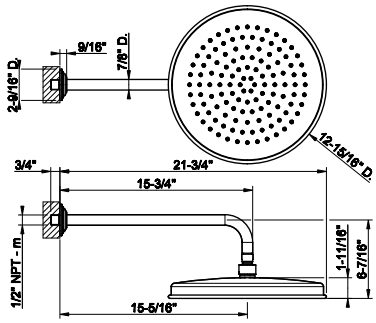

65152



Ceiling-mounted adjustable shower head with arm.
- 1/2” connections.
- Projection from ceiling 11-3/8”
- Max flow rate 1.75 GPM

031	Chrome	2.407	735	Warm Bronze PVD	3.562
149	Finox Br. Nickel	3.249	726	Warm Bronze Br. PVD	3.802
299	Matte Black	3.249	710	Brass PVD	3.562
720	Nickel PVD	3.562	727	Brass Br. PVD	3.802
706	Black Metal PVD	3.562	246	Gold PVD	4.044
707	Black Metal Br. PVD	3.802	716	Gold Br. PVD	4.044
030	Copper PVD	3.562	187	Aged Bronze	3.802
708	Copper Br. PVD	3.802	713	Antique Brass	3.802

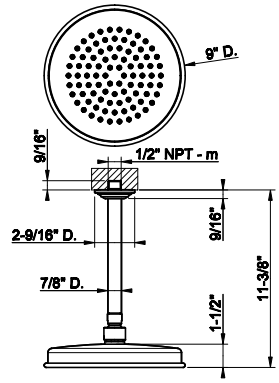

65153



Ceiling-mounted adjustable shower head with arm.
- 1/2” connections.
- Projection from ceiling 11-9/16”
- Max flow rate 1.75 GPM

031	Chrome	3.609	735	Warm Bronze PVD	5.343
149	Finox Br. Nickel	4.872	726	Warm Bronze Br. PVD	5.702
299	Matte Black	4.872	710	Brass PVD	5.343
720	Nickel PVD	5.343	727	Brass Br. PVD	5.702
706	Black Metal PVD	5.343	246	Gold PVD	6.064
707	Black Metal Br. PVD	5.702	716	Gold Br. PVD	6.064
030	Copper PVD	5.343	187	Aged Bronze	5.702
708	Copper Br. PVD	5.702	713	Antique Brass	5.702

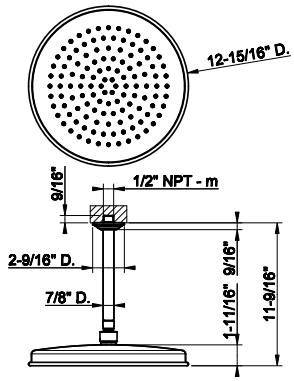

65142

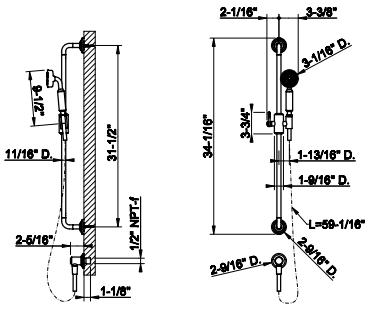

Handshower and adjustable sliding rail set
- Adjustable bar
- Adjustable hook
- 59” Flex hose
- Wall elbow
- Max flow rate 1.75 GPM

031	Chrome	3.036	735	Warm Bronze PVD	4.494
149	Finox Br. Nickel	4.099	726	Warm Bronze Br. PVD	4.797
299	Matte Black	4.099	710	Brass PVD	4.494
720	Nickel PVD	4.494	727	Brass Br. PVD	4.797
706	Black Metal PVD	4.494	246	Gold PVD	5.101
707	Black Metal Br. PVD	4.797	716	Gold Br. PVD	5.101
030	Copper PVD	4.494	187	Aged Bronze	4.797
708	Copper Br. PVD	4.797	713	Antique Brass	4.797



65123

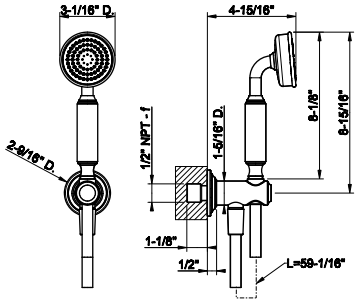

Handshower set
- Fixed hook.
- Wall elbow
- 59” flex hose
- Max flow rate 1.75 GPM

031	Chrome	1.346	735	Warm Bronze PVD	1.991
149	Finox Br. Nickel	1.816	726	Warm Bronze Br. PVD	2.127
299	Matte Black	1.816	710	Brass PVD	1.991
720	Nickel PVD	1.991	727	Brass Br. PVD	2.127
706	Black Metal PVD	1.991	246	Gold PVD	2.262
707	Black Metal Br. PVD	2.127	716	Gold Br. PVD	2.262
030	Copper PVD	1.991	187	Aged Bronze	2.127
708	Copper Br. PVD	2.127	713	Antique Brass	2.127



63099

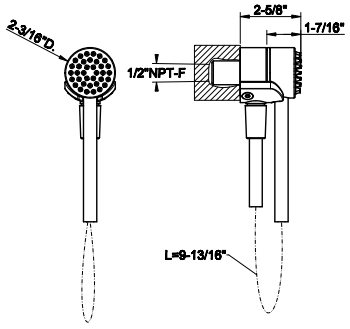

Magnetic anti-limestone handshower set
- Fixed hook
- Wall elbow
- 59” Cromalux flex hose
- Max flow rate 1.75 GPM

031	Chrome	1.213	726	Warm Bronze Br. PVD	1.916
149	Finox Br. Nickel	1.638	710	Brass PVD	1.794
299	Matte Black	1.638	727	Brass Br. PVD	1.916
720	Nickel PVD	1.794	246	Gold PVD	2.037
706	Black Metal PVD	1.794	716	Gold Br. PVD	2.037
707	Black Metal Br. PVD	1.916	845	Dark Bronze	1.916
030	Copper PVD	1.794	187	Aged Bronze	1.916
708	Copper Br. PVD	1.916	713	Antique Brass	1.916
735	Warm Bronze PVD	1.794			



32971

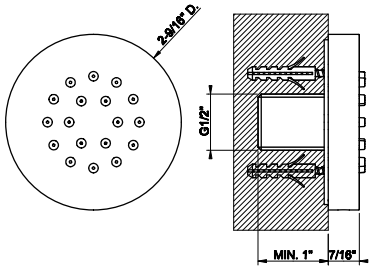

Round body spray
- 1/2” connections
- Max flow rate 1 GPM at 60 PSI

031	Chrome	552	726	Warm Bronze Br. PVD	873
149	Finox Br. Nickel	746	710	Brass PVD	840
299	Matte Black	746	727	Brass Br. PVD	873
147	Chrome Br.	766	246	Gold PVD	929
720	Nickel PVD	818	716	Gold Br. PVD	929
706	Black Metal PVD	818	845	Dark Bronze	873
707	Black Metal Br. PVD	873	187	Aged Bronze	873
030	Copper PVD	818	713	Antique Brass	873
708	Copper Br. PVD	873	279	Matte White	746
735	Warm Bronze PVD	840			



32985

In-wall rough valve for pivotable body spray 32982



031	Chrome	406

32985+32982

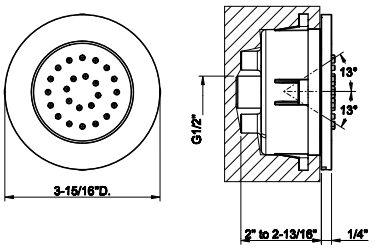

32982

TRIM PARTS ONLY Round in-wall pivotable body spray
- 1/2” connections
- Requires in-wall rough valve 32985
- Max flow rate 1 GPM at60 PSI



031	Chrome	773	726	Warm Bronze Br. PVD	1.223
149	Finox Br. Nickel	1.045	710	Brass PVD	1.145
299	Matte Black	1.045	727	Brass Br. PVD	1.223
147	Chrome Br.	1.045	246	Gold PVD	1.300
720	Nickel PVD	1.145	716	Gold Br. PVD	1.300
706	Black Metal PVD	1.145	845	Dark Bronze	1.223
707	Black Metal Br. PVD	1.223	187	Aged Bronze	1.223
030	Copper PVD	1.145	713	Antique Brass	1.223
708	Copper Br. PVD	1.223	279	Matte White	1.045
735	Warm Bronze PVD	1.145			

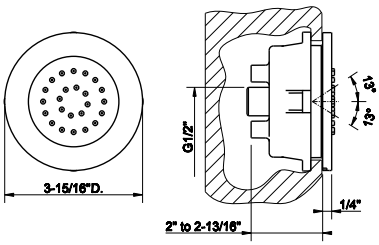

13375

Pivotable body spray
- 1/2” connections
- Max flow rate 0.9 GPM at 60 PSI



031	Chrome	405	726	Warm Bronze Br. PVD	639
149	Finox Br. Nickel	547	710	Brass PVD	598
299	Matte Black	547	727	Brass Br. PVD	639
147	Chrome Br.	547	246	Gold PVD	680
720	Nickel PVD	598	716	Gold Br. PVD	680
706	Black Metal PVD	598	845	Dark Bronze	639
707	Black Metal Br. PVD	639	187	Aged Bronze	639
030	Copper PVD	598	713	Antique Brass	639
708	Copper Br. PVD	639	279	Matte White	547
735	Warm Bronze PVD	598			

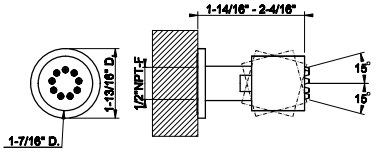

65295

Wall-fixing cascade spout
- 1/2” connections
- Flow rate 4.8 GPM at 60 PSI



031	Chrome	1.937	726	Warm Bronze Br. PVD	3.058
149	Finox Br. Nickel	2.614	710	Brass PVD	2.864
299	Matte Black	2.614	727	Brass Br. PVD	3.058
720	Nickel PVD	2.864	246	Gold PVD	3.255
706	Black Metal PVD	2.864	716	Gold Br. PVD	3.255
707	Black Metal Br. PVD	3.058	845	Dark Bronze	3.058
030	Copper PVD	2.864	187	Aged Bronze	3.058
708	Copper Br. PVD	3.058	713	Antique Brass	3.058
735	Warm Bronze PVD	2.864	279	Matte White	2.614

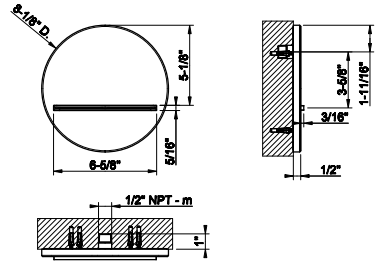

65169

Wall elbow with backplate
• 1/2” connection

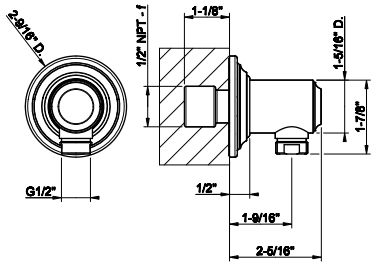



031	Chrome	486	735	Warm Bronze PVD	718
149	Finox Br. Nickel	655	726	Warm Bronze Br. PVD	768
299	Matte Black	655	710	Brass PVD	718
720	Nickel PVD	718	727	Brass Br. PVD	768
706	Black Metal PVD	718	246	Gold PVD	817
707	Black Metal Br. PVD	768	716	Gold Br. PVD	817
030	Copper PVD	718	187	Aged Bronze	768
708	Copper Br. PVD	768	713	Antique Brass	768

65161

Wall elbow with built in water intake and fixed hook
• 1/2” connection

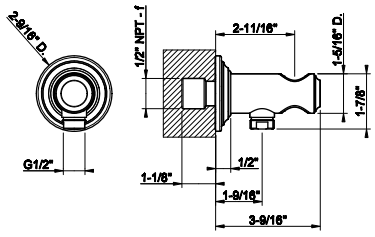



031	Chrome	527	735	Warm Bronze PVD	779
149	Finox Br. Nickel	710	726	Warm Bronze Br. PVD	832
299	Matte Black	710	710	Brass PVD	779
720	Nickel PVD	779	727	Brass Br. PVD	832
706	Black Metal PVD	779	246	Gold PVD	886
707	Black Metal Br. PVD	832	716	Gold Br. PVD	886
030	Copper PVD	779	187	Aged Bronze	832
708	Copper Br. PVD	832	713	Antique Brass	832

65157

Fixed handshower hook.

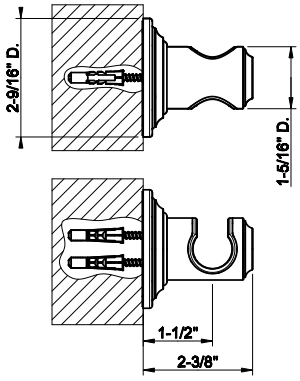



031	Chrome	471	735	Warm Bronze PVD	695
149	Finox Br. Nickel	635	726	Warm Bronze Br. PVD	742
299	Matte Black	635	710	Brass PVD	695
720	Nickel PVD	695	727	Brass Br. PVD	742
706	Black Metal PVD	695	246	Gold PVD	792
707	Black Metal Br. PVD	742	716	Gold Br. PVD	792
030	Copper PVD	695	187	Aged Bronze	742
708	Copper Br. PVD	742	713	Antique Brass	742

65160

Adjustable handshower hook.

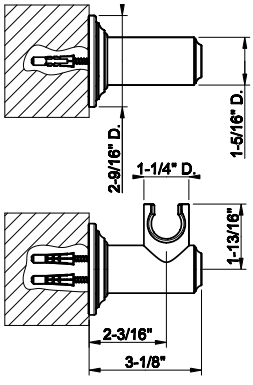



031	Chrome	687	735	Warm Bronze PVD	1.017
149	Finox Br. Nickel	930	726	Warm Bronze Br. PVD	1.087
299	Matte Black	930	710	Brass PVD	1.017
720	Nickel PVD	1.017	727	Brass Br. PVD	1.087
706	Black Metal PVD	1.017	246	Gold PVD	1.155
707	Black Metal Br. PVD	1.087	716	Gold Br. PVD	1.155
030	Copper PVD	1.017	187	Aged Bronze	1.087
708	Copper Br. PVD	1.087	713	Antique Brass	1.087



65154

Handshower
• Max flow rate 1.75 GPM

031	Chrome	819	735	Warm Bronze PVD	1.211
149	Finox Br. Nickel	1.103	726	Warm Bronze Br. PVD	1.294
299	Matte Black	1.103	710	Brass PVD	1.211
720	Nickel PVD	1.211	727	Brass Br. PVD	1.294
706	Black Metal PVD	1.211	246	Gold PVD	1.376
707	Black Metal Br. PVD	1.294	716	Gold Br. PVD	1.376
030	Copper PVD	1.211	187	Aged Bronze	1.294
708	Copper Br. PVD	1.294	713	Antique Brass	1.294

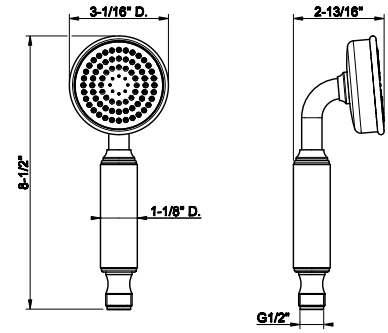



01637

59” flex hose

031	Chrome	134	726	Warm Bronze Br. PVD	214
149	Finox Br. Nickel	173	710	Brass PVD	203
299	Matte Black	173	727	Brass Br. PVD	214
147	Chrome Br.	173	246	Gold PVD	227
720	Nickel PVD	203	716	Gold Br. PVD	227
706	Black Metal PVD	203	845	Dark Bronze	214
707	Black Metal Br. PVD	214	187	Aged Bronze	214
030	Copper PVD	203	713	Antique Brass	214
708	Copper Br. PVD	214	279	Matte White	173
735	Warm Bronze PVD	203			

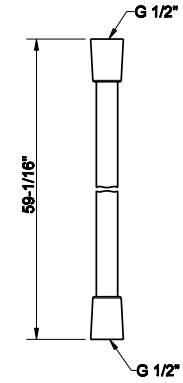



01724

Metal flexible hose, 59” length, 1/2” connector.

031	Chrome	196	726	Warm Bronze Br. PVD	308
149	Finox Br. Nickel	260	710	Brass PVD	288
299	Matte Black	260	727	Brass Br. PVD	308
147	Chrome Br.	260	246	Gold PVD	288
720	Nickel PVD	308	716	Gold Br. PVD	341
706	Black Metal PVD	288	845	Dark Bronze	308
707	Black Metal Br. PVD	308	187	Aged Bronze	308
030	Copper PVD	288	713	Antique Brass	308
708	Copper Br. PVD	308	279	Matte White	259
735	Warm Bronze PVD	288			

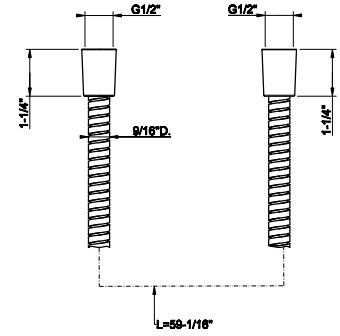

GESSI®



VENTI20
accessories

65401

Wall-mounted soap dish, white



031	Chrome	676	735	Warm Bronze PVD	999
149	Finox Br. Nickel	911	726	Warm Bronze Br. PVD	1.067
299	Matte Black	911	710	Brass PVD	999
720	Nickel PVD	999	727	Brass Br. PVD	1.067
706	Black Metal PVD	999	246	Gold PVD	1.136
707	Black Metal Br. PVD	1.067	716	Gold Br. PVD	1.136
030	Copper PVD	999	187	Aged Bronze	1.067
708	Copper Br. PVD	1.067	713	Antique Brass	1.067

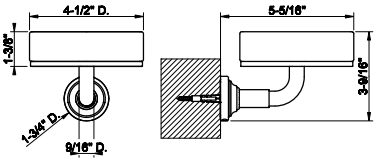

65402

Wall-mounted soap dish, black



031	Chrome	676	735	Warm Bronze PVD	999
149	Finox Br. Nickel	911	726	Warm Bronze Br. PVD	1.067
299	Matte Black	911	710	Brass PVD	999
720	Nickel PVD	999	727	Brass Br. PVD	1.067
706	Black Metal PVD	999	246	Gold PVD	1.136
707	Black Metal Br. PVD	1.067	716	Gold Br. PVD	1.136
030	Copper PVD	999	187	Aged Bronze	1.067
708	Copper Br. PVD	1.067	713	Antique Brass	1.067

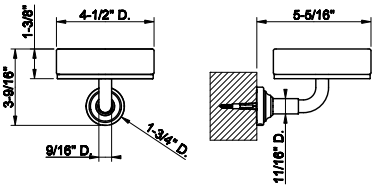

65407

Wall-mounted holder, white



031	Chrome	730	735	Warm Bronze PVD	1.078
149	Finox Br. Nickel	984	726	Warm Bronze Br. PVD	1.150
299	Matte Black	984	710	Brass PVD	1.078
720	Nickel PVD	1.078	727	Brass Br. PVD	1.150
706	Black Metal PVD	1.078	246	Gold PVD	1.227
707	Black Metal Br. PVD	1.150	716	Gold Br. PVD	1.227
030	Copper PVD	1.078	187	Aged Bronze	1.150
708	Copper Br. PVD	1.150	713	Antique Brass	1.150

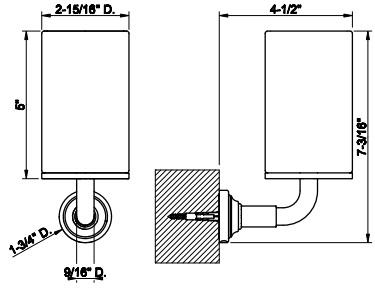

65408

Wall-mounted holder, black



031	Chrome	730	735	Warm Bronze PVD	1.078
149	Finox Br. Nickel	984	726	Warm Bronze Br. PVD	1.150
299	Matte Black	984	710	Brass PVD	1.078
720	Nickel PVD	1.078	727	Brass Br. PVD	1.150
706	Black Metal PVD	1.078	246	Gold PVD	1.227
707	Black Metal Br. PVD	1.150	716	Gold Br. PVD	1.227
030	Copper PVD	1.078	187	Aged Bronze	1.150
708	Copper Br. PVD	1.150	713	Antique Brass	1.150

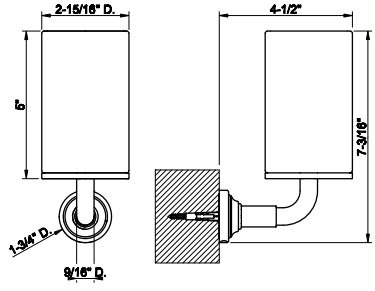

65413

Wall-mounted liquid soap dispenser , white

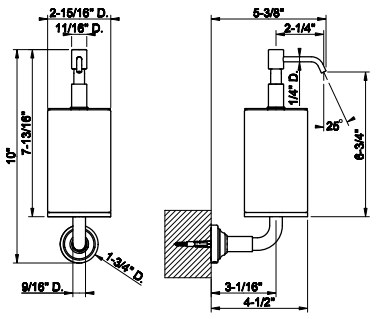



031	Chrome	1.254	735	Warm Bronze PVD	1.854
149	Finox Br. Nickel	1.692	726	Warm Bronze Br. PVD	1.978
299	Matte Black	1.692	710	Brass PVD	1.854
720	Nickel PVD	1.854	727	Brass Br. PVD	1.978
706	Black Metal PVD	1.854	246	Gold PVD	2.107
707	Black Metal Br. PVD	1.978	716	Gold Br. PVD	2.107
030	Copper PVD	1.854	187	Aged Bronze	1.978
708	Copper Br. PVD	1.978	713	Antique Brass	1.978

65414

Wall-mounted liquid soap dispenser - black

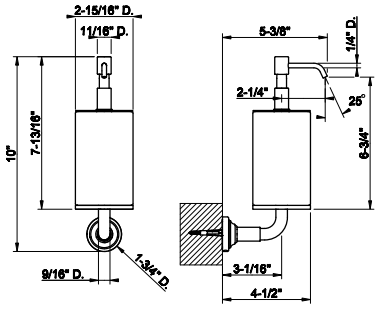



031	Chrome	1.254	735	Warm Bronze PVD	1.854
149	Finox Br. Nickel	1.692	726	Warm Bronze Br. PVD	1.978
299	Matte Black	1.692	710	Brass PVD	1.854
720	Nickel PVD	1.854	727	Brass Br. PVD	1.978
706	Black Metal PVD	1.854	246	Gold PVD	2.107
707	Black Metal Br. PVD	1.978	716	Gold Br. PVD	2.107
030	Copper PVD	1.854	187	Aged Bronze	1.978
708	Copper Br. PVD	1.978	713	Antique Brass	1.978

65419

Wall-mounted brush holder, white

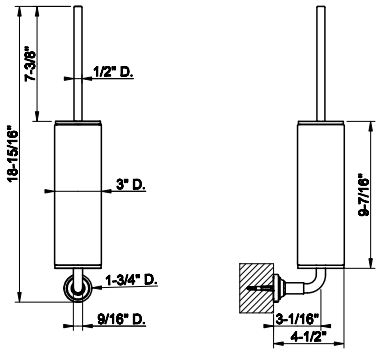



031	Chrome	1.080	735	Warm Bronze PVD	1.600
149	Finox Br. Nickel	1.461	726	Warm Bronze Br. PVD	1.711
299	Matte Black	1.461	710	Brass PVD	1.600
720	Nickel PVD	1.600	727	Brass Br. PVD	1.711
706	Black Metal PVD	1.600	246	Gold PVD	1.815
707	Black Metal Br. PVD	1.711	716	Gold Br. PVD	1.815
030	Copper PVD	1.600	187	Aged Bronze	1.711
708	Copper Br. PVD	1.711	713	Antique Brass	1.711

65420

Wall-mounted brush holder, black

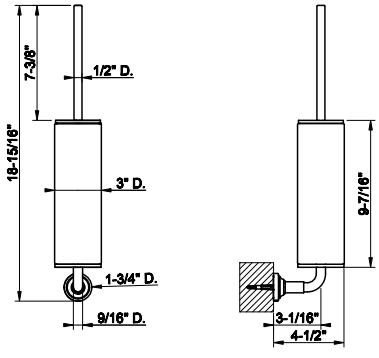



031	Chrome	1.080	735	Warm Bronze PVD	1.600
149	Finox Br. Nickel	1.461	726	Warm Bronze Br. PVD	1.711
299	Matte Black	1.461	710	Brass PVD	1.600
720	Nickel PVD	1.600	727	Brass Br. PVD	1.711
706	Black Metal PVD	1.600	246	Gold PVD	1.815
707	Black Metal Br. PVD	1.711	716	Gold Br. PVD	1.815
030	Copper PVD	1.600	187	Aged Bronze	1.711
708	Copper Br. PVD	1.711	713	Antique Brass	1.711

58525

Standing soap holder, white



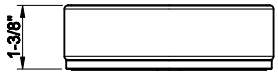

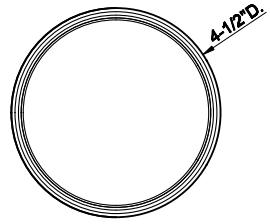

031	Chrome	391	726	Warm Bronze Br. PVD	618
149	Finox Br. Nickel	528	710	Brass PVD	580
299	Matte Black	528	727	Brass Br. PVD	618
720	Nickel PVD	580	246	Gold PVD	658
706	Black Metal PVD	580	716	Gold Br. PVD	658
707	Black Metal Br. PVD	618	845	Dark Bronze	618
030	Copper PVD	580	187	Aged Bronze	618
708	Copper Br. PVD	618	713	Antique Brass	618
735	Warm Bronze PVD	580	279	Matte White	528

58526

Standing soap holder, black



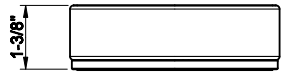

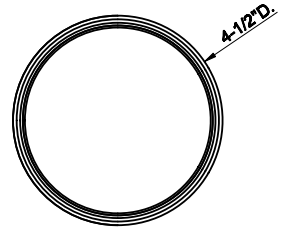

031	Chrome	391	726	Warm Bronze Br. PVD	618
149	Finox Br. Nickel	528	710	Brass PVD	580
299	Matte Black	528	727	Brass Br. PVD	618
720	Nickel PVD	580	246	Gold PVD	658
706	Black Metal PVD	580	716	Gold Br. PVD	658
707	Black Metal Br. PVD	618	845	Dark Bronze	618
030	Copper PVD	580	187	Aged Bronze	618
708	Copper Br. PVD	618	713	Antique Brass	618
735	Warm Bronze PVD	580	279	Matte White	528

58531

Standing tumbler holder, white



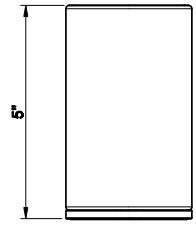

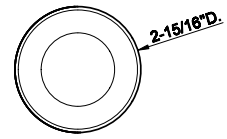

031	Chrome	436	726	Warm Bronze Br. PVD	689
149	Finox Br. Nickel	590	710	Brass PVD	647
299	Matte Black	590	727	Brass Br. PVD	689
720	Nickel PVD	647	246	Gold PVD	733
706	Black Metal PVD	647	716	Gold Br. PVD	733
707	Black Metal Br. PVD	689	845	Dark Bronze	689
030	Copper PVD	647	187	Aged Bronze	689
708	Copper Br. PVD	689	713	Antique Brass	689
735	Warm Bronze PVD	647	279	Matte White	590

58532

Standing tumbler holder, black



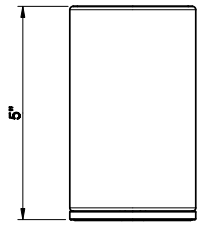

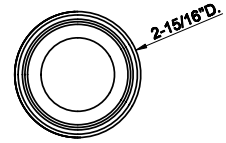

031	Chrome	436	726	Warm Bronze Br. PVD	689
149	Finox Br. Nickel	590	710	Brass PVD	647
299	Matte Black	590	727	Brass Br. PVD	689
720	Nickel PVD	647	246	Gold PVD	733
706	Black Metal PVD	647	716	Gold Br. PVD	733
707	Black Metal Br. PVD	689	845	Dark Bronze	689
030	Copper PVD	647	187	Aged Bronze	689
708	Copper Br. PVD	689	713	Antique Brass	689
735	Warm Bronze PVD	647	279	Matte White	590

VENTI20 ACCESSORIES

65437

Standing soap dispenser holder, white

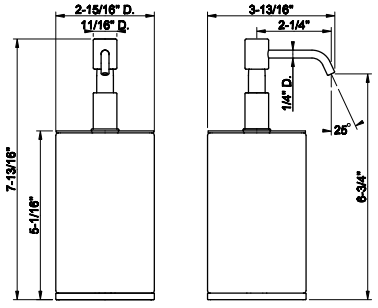



031	Chrome	1.090	735	Warm Bronze PVD	1.607
149	Finox Br. Nickel	1.468	726	Warm Bronze Br. PVD	1.717
299	Matte Black	1.468	710	Brass PVD	1.607
720	Nickel PVD	1.607	727	Brass Br. PVD	1.717
706	Black Metal PVD	1.607	246	Gold PVD	1.832
707	Black Metal Br. PVD	1.717	716	Gold Br. PVD	1.832
030	Copper PVD	1.607	187	Aged Bronze	1.717
708	Copper Br. PVD	1.717	713	Antique Brass	1.717

65438

Standing soap dispenser holder, black

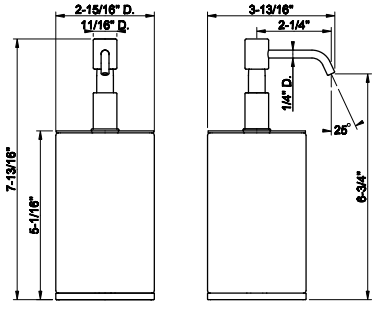



031	Chrome	1.090	735	Warm Bronze PVD	1.607
149	Finox Br. Nickel	1.468	726	Warm Bronze Br. PVD	1.717
299	Matte Black	1.468	710	Brass PVD	1.607
720	Nickel PVD	1.607	727	Brass Br. PVD	1.717
706	Black Metal PVD	1.607	246	Gold PVD	1.832
707	Black Metal Br. PVD	1.717	716	Gold Br. PVD	1.832
030	Copper PVD	1.607	187	Aged Bronze	1.717
708	Copper Br. PVD	1.717	713	Antique Brass	1.717

65523

Razor holder

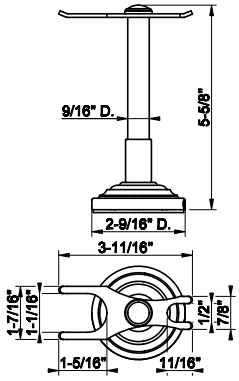



031	Chrome	469	735	Warm Bronze PVD	693
149	Finox Br. Nickel	633	726	Warm Bronze Br. PVD	740
299	Matte Black	633	710	Brass PVD	693
720	Nickel PVD	693	727	Brass Br. PVD	740
706	Black Metal PVD	693	246	Gold PVD	788
707	Black Metal Br. PVD	740	716	Gold Br. PVD	788
030	Copper PVD	693	187	Aged Bronze	740
708	Copper Br. PVD	740	713	Antique Brass	740

58543

Standing brush holder, white

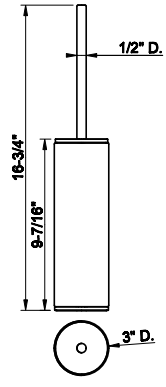



031	Chrome	848	726	Warm Bronze Br. PVD	1.340
149	Finox Br. Nickel	1.145	710	Brass PVD	1.256
299	Matte Black	1.145	727	Brass Br. PVD	1.340
720	Nickel PVD	1.256	246	Gold PVD	1.424
706	Black Metal PVD	1.256	716	Gold Br. PVD	1.424
707	Black Metal Br. PVD	1.340	845	Dark Bronze	1.340
030	Copper PVD	1.256	187	Aged Bronze	1.340
708	Copper Br. PVD	1.340	713	Antique Brass	1.340
735	Warm Bronze PVD	1.256	279	Matte White	1.145



58544

Standing brush holder, black

031	Chrome	848	726	Warm Bronze Br. PVD	1.340
149	Finox Br. Nickel	1.145	710	Brass PVD	1.256
299	Matte Black	1.145	727	Brass Br. PVD	1.340
720	Nickel PVD	1.141	246	Gold PVD	1.424
706	Black Metal PVD	1.256	716	Gold Br. PVD	1.424
707	Black Metal Br. PVD	1.340	845	Dark Bronze	1.340
030	Copper PVD	1.256	187	Aged Bronze	1.340
708	Copper Br. PVD	1.340	713	Antique Brass	1.340
735	Warm Bronze PVD	1.256	279	Matte White	1.145

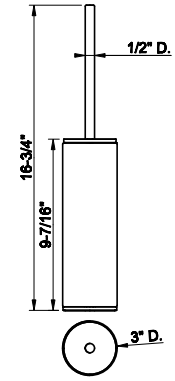

65455

Wall-mounted tissue holder. Vertical or horizontal application



031	Chrome	597	735	Warm Bronze PVD	883
149	Finox Br. Nickel	804	726	Warm Bronze Br. PVD	941
299	Matte Black	804	710	Brass PVD	883
720	Nickel PVD	883	727	Brass Br. PVD	941
706	Black Metal PVD	883	246	Gold PVD	1.003
707	Black Metal Br. PVD	941	716	Gold Br. PVD	1.003
030	Copper PVD	883	187	Aged Bronze	941
708	Copper Br. PVD	941	713	Antique Brass	941

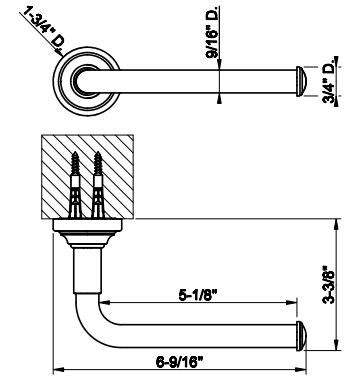

65449

Wall-mounted paper roll holder with cover



031	Chrome	774	735	Warm Bronze PVD	1.146
149	Finox Br. Nickel	1.047	726	Warm Bronze Br. PVD	1.224
299	Matte Black	1.047	710	Brass PVD	1.146
720	Nickel PVD	1.146	727	Brass Br. PVD	1.224
706	Black Metal PVD	1.146	246	Gold PVD	1.301
707	Black Metal Br. PVD	1.224	716	Gold Br. PVD	1.301
030	Copper PVD	1.146	187	Aged Bronze	1.224
708	Copper Br. PVD	1.224	713	Antique Brass	1.224

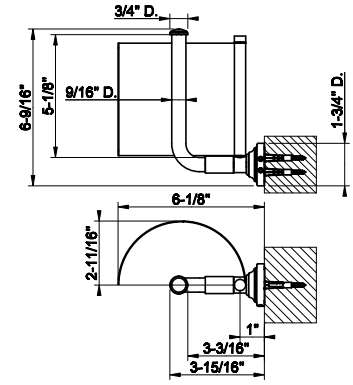

65497

Wall-mounted 12” towel bar



031	Chrome	840	735	Warm Bronze PVD	1.240
149	Finox Br. Nickel	1.132	726	Warm Bronze Br. PVD	1.325
299	Matte Black	1.132	710	Brass PVD	1.240
720	Nickel PVD	1.240	727	Brass Br. PVD	1.325
706	Black Metal PVD	1.240	246	Gold PVD	1.412
707	Black Metal Br. PVD	1.325	716	Gold Br. PVD	1.412
030	Copper PVD	1.240	187	Aged Bronze	1.325
708	Copper Br. PVD	1.325	713	Antique Brass	1.325

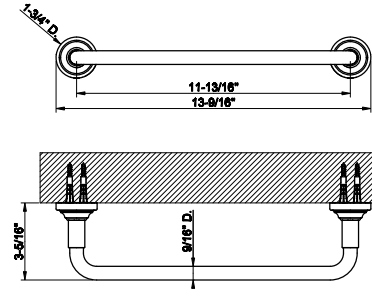

VENTI20 ACCESSORIES

65500

Wall-mounted 18” towel bar

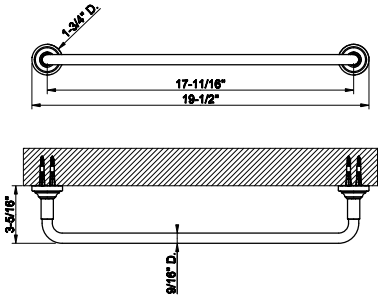



031	Chrome	878	735	Warm Bronze PVD	1.299
149	Finox Br. Nickel	1.184	726	Warm Bronze Br. PVD	1.386
299	Matte Black	1.184	710	Brass PVD	1.299
720	Nickel PVD	1.299	727	Brass Br. PVD	1.386
706	Black Metal PVD	1.299	246	Gold PVD	1.476
707	Black Metal Br. PVD	1.386	716	Gold Br. PVD	1.476
030	Copper PVD	1.299	187	Aged Bronze	1.386
708	Copper Br. PVD	1.386	713	Antique Brass	1.386

65503

Wall-mounted 24” towel bar

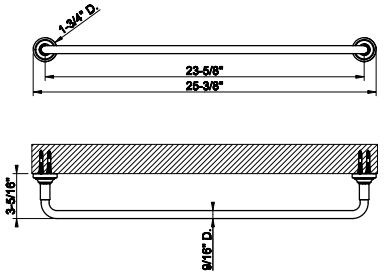



031	Chrome	937	735	Warm Bronze PVD	1.386
149	Finox Br. Nickel	1.263	726	Warm Bronze Br. PVD	1.478
299	Matte Black	1.263	710	Brass PVD	1.386
720	Nickel PVD	1.386	727	Brass Br. PVD	1.478
706	Black Metal PVD	1.386	246	Gold PVD	1.575
707	Black Metal Br. PVD	1.478	716	Gold Br. PVD	1.575
030	Copper PVD	1.386	187	Aged Bronze	1.478
708	Copper Br. PVD	1.478	713	Antique Brass	1.478

65509

Towel ring

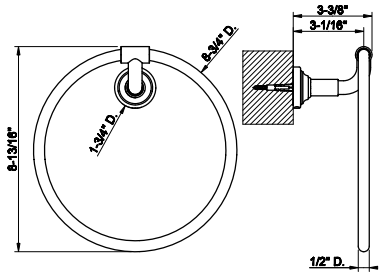



031	Chrome	657	735	Warm Bronze PVD	972
149	Finox Br. Nickel	887	726	Warm Bronze Br. PVD	1.035
299	Matte Black	887	710	Brass PVD	972
720	Nickel PVD	972	727	Brass Br. PVD	1.035
706	Black Metal PVD	972	246	Gold PVD	1.104
707	Black Metal Br. PVD	1.035	716	Gold Br. PVD	1.104
030	Copper PVD	972	187	Aged Bronze	1.035
708	Copper Br. PVD	1.035	713	Antique Brass	1.035

59549

12” Shelf

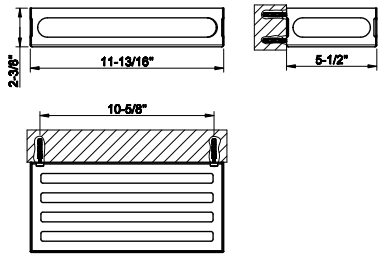

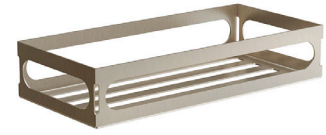

031	Chrome	796	726	Warm Bronze Br. PVD	1.259
149	Finox Br. Nickel	1.075	710	Brass PVD	1.179
299	Matte Black	1.075	727	Brass Br. PVD	1.259
720	Nickel PVD	1.179	246	Gold PVD	1.338
706	Black Metal PVD	1.179	716	Gold Br. PVD	1.338
707	Black Metal Br. PVD	1.259	187	Aged Bronze	1.259
030	Copper PVD	1.179	713	Antique Brass	1.259
708	Copper Br. PVD	1.259	279	Matte White	1.075
735	Warm Bronze PVD	1.179			

59561

Corner shelf



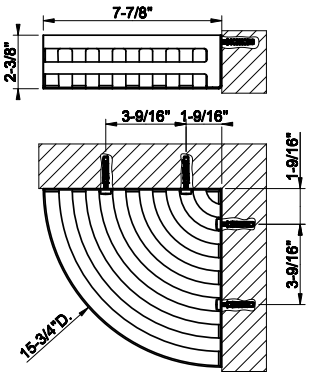

031	Chrome	631	726	Warm Bronze Br. PVD	995
149	Finox Br. Nickel	850	710	Brass PVD	932
299	Matte Black	850	727	Brass Br. PVD	995
720	Nickel PVD	932	246	Gold PVD	1.061
706	Black Metal PVD	932	716	Gold Br. PVD	1.061
707	Black Metal Br. PVD	995	187	Aged Bronze	995
030	Copper PVD	932	713	Antique Brass	995
708	Copper Br. PVD	995	279	Matte White	850
735	Warm Bronze PVD	932			

65521

Wall-mounted robe hook.



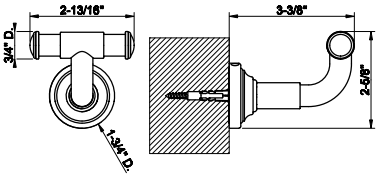

031	Chrome	390	735	Warm Bronze PVD	578
149	Finox Br. Nickel	527	726	Warm Bronze Br. PVD	617
299	Matte Black	527	710	Brass PVD	578
720	Nickel PVD	578	727	Brass Br. PVD	617
706	Black Metal PVD	578	246	Gold PVD	656
707	Black Metal Br. PVD	617	716	Gold Br. PVD	656
030	Copper PVD	578	187	Aged Bronze	617
708	Copper Br. PVD	617	713	Antique Brass	617

65511

Towel rail for glass fixing - 12” length



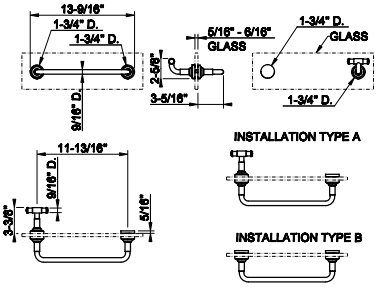

031	Chrome	1.101	735	Warm Bronze PVD	1.628
149	Finox Br. Nickel	1.485	726	Warm Bronze Br. PVD	1.737
299	Matte Black	1.485	710	Brass PVD	1.628
720	Nickel PVD	1.628	727	Brass Br. PVD	1.737
706	Black Metal PVD	1.628	246	Gold PVD	1.850
707	Black Metal Br. PVD	1.737	716	Gold Br. PVD	1.850
030	Copper PVD	1.628	187	Aged Bronze	1.737
708	Copper Br. PVD	1.737	713	Antique Brass	1.737

65513

Towel rail for glass fixing - 18” length



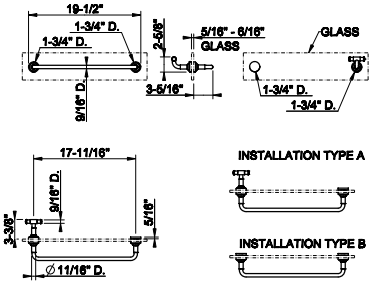

031	Chrome	1.224	735	Warm Bronze PVD	1.809
149	Finox Br. Nickel	1.650	726	Warm Bronze Br. PVD	1.931
299	Matte Black	1.650	710	Brass PVD	1.809
720	Nickel PVD	1.809	727	Brass Br. PVD	1.931
706	Black Metal PVD	1.809	246	Gold PVD	2.057
707	Black Metal Br. PVD	1.931	716	Gold Br. PVD	2.057
030	Copper PVD	1.809	187	Aged Bronze	1.931
708	Copper Br. PVD	1.931	713	Antique Brass	1.931

65515

Towel rail for glass fixing - 24” length

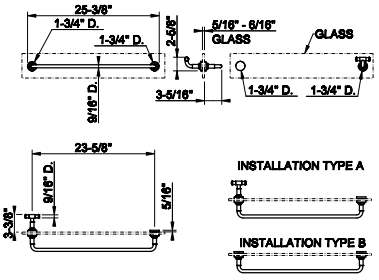



031	Chrome	1.280	735	Warm Bronze PVD	1.897
149	Finox Br. Nickel	1.730	726	Warm Bronze Br. PVD	2.023
299	Matte Black	1.730	710	Brass PVD	1.897
720	Nickel PVD	1.897	727	Brass Br. PVD	2.023
706	Black Metal PVD	1.897	246	Gold PVD	2.151
707	Black Metal Br. PVD	2.023	716	Gold Br. PVD	2.151
030	Copper PVD	1.897	187	Aged Bronze	2.023
708	Copper Br. PVD	2.023	713	Antique Brass	2.023

65517

Safety grip-handle for bathtub and shower enclosure
• 18” length

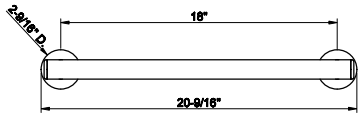

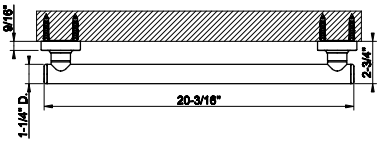



031	Chrome	1.991	735	Warm Bronze PVD	2.943
149	Finox Br. Nickel	2.687	726	Warm Bronze Br. PVD	3.143
299	Matte Black	2.687	710	Brass PVD	2.943
720	Nickel PVD	2.943	727	Brass Br. PVD	3.143
706	Black Metal PVD	2.943	246	Gold PVD	3.345
707	Black Metal Br. PVD	3.143	716	Gold Br. PVD	3.345
030	Copper PVD	2.943	187	Aged Bronze	3.143
708	Copper Br. PVD	3.143	713	Antique Brass	3.143

65519

Safety grip-handle for bathtub and shower enclosure
• 24” length

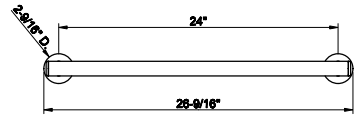

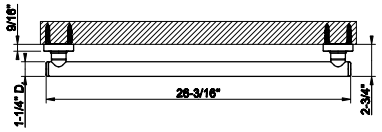



031	Chrome	2.179	735	Warm Bronze PVD	3.225
149	Finox Br. Nickel	2.941	726	Warm Bronze Br. PVD	3.442
299	Matte Black	2.941	710	Brass PVD	3.225
720	Nickel PVD	3.225	727	Brass Br. PVD	3.442
706	Black Metal PVD	3.225	246	Gold PVD	3.661
707	Black Metal Br. PVD	3.442	716	Gold Br. PVD	3.661
030	Copper PVD	3.225	187	Aged Bronze	3.442
708	Copper Br. PVD	3.442	713	Antique Brass	3.442

65522

Safety grip-handle for bathtub and shower enclosure
• 36” length

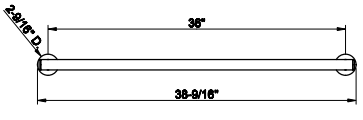

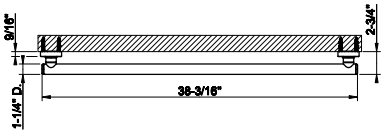



031	Chrome	2.323	735	Warm Bronze PVD	3.440
149	Finox Br. Nickel	3.138	726	Warm Bronze Br. PVD	3.672
299	Matte Black	3.138	710	Brass PVD	3.440
720	Nickel PVD	3.440	727	Brass Br. PVD	3.672
706	Black Metal PVD	3.440	246	Gold PVD	3.903
707	Black Metal Br. PVD	3.672	716	Gold Br. PVD	3.903
030	Copper PVD	3.440	187	Aged Bronze	3.672
708	Copper Br. PVD	3.672	713	Antique Brass	3.672

GESSI®



VENTI20
total look

54651



Flush Actuator Plate VENTI20
•Compatible with GEBERIT models: 111.597.001, 111.902.005, 111.798.00.1, 111.335.00.5
•Without visible fixingsystem
•ADA COMPLIANT

031	Chrome	1.590	735	Warm Bronze PVD	2.352
149	Finox Br. Nickel	2.145	726	Warm Bronze Br. PVD	2.510
299	Matte Black	2.145	710	Brass PVD	2.352
720	Nickel PVD	2.352	727	Brass Br. PVD	2.510
706	Black Metal PVD	2.352	246	Gold PVD	2.670
707	Black Metal Br. PVD	2.510	716	Gold Br. PVD	2.670
030	Copper PVD	2.352	187	Aged Bronze	2.510
708	Copper Br. PVD	2.510	713	Antique Brass	2.510

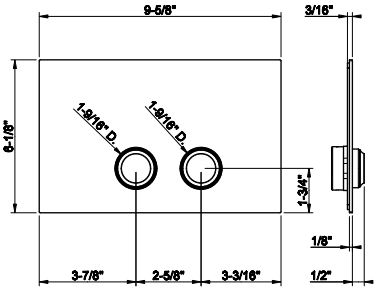

65601



Counter washbasin in stailess steel RIGATO, without overflow waste. It can be combined with waste 54597.

239	Steel Br.	5.760	726	Warm Bronze Br. PVD	10.549
707	Black Metal Br. PVD	10.549	727	Brass Br. PVD	10.549
708	Copper Br. PVD	10.549			

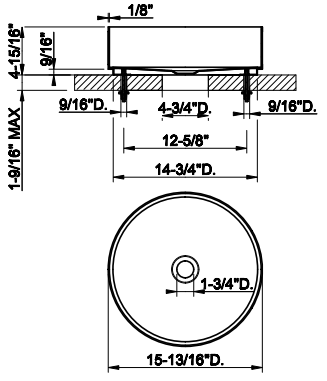

54601



Counter washbasin In stainless steel, without overflow waste. Without basin waste. It can be combined with waste 54597.

239	Steel Br.	2.449	708	Copper Br. PVD	6.986
299	Matte Black	4.431	726	Warm Bronze Br. PVD	6.986
707	Black Metal Br. PVD	6.986	727	Brass Br. PVD	6.986

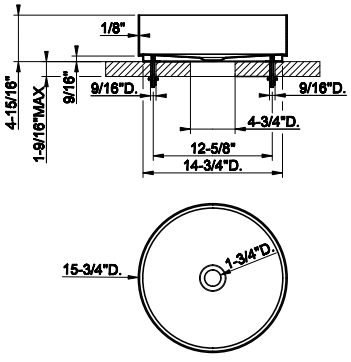

01578

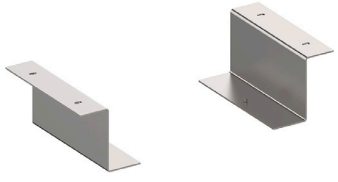

Undermounted washbasin brackets for 54601, 54605, 54606.

031	Chrome	428

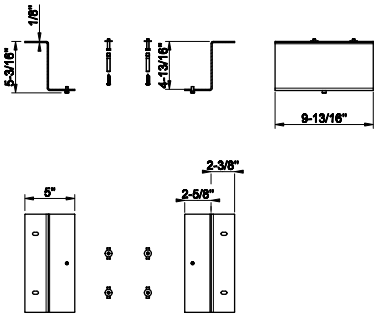

VENTI20 TOTAL LOOK

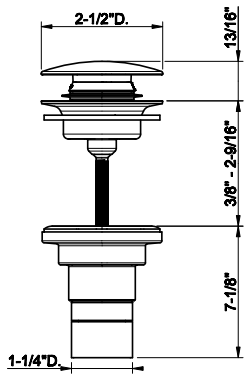

54597

1 1/4" push drain with or without overflow feature
- Recommended for Gessi 316 Collection



239	Steel Br.	212	708	Copper Br. PVD	313
299	Matte Black	287	726	Warm Bronze Br. PVD	313
707	Black Metal Br. PVD	313	727	Brass Br. PVD	313

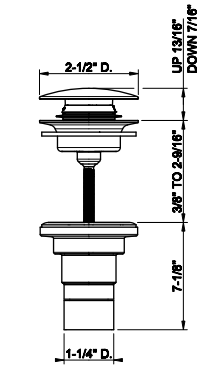

01427

1 1/4" push drain with or without overflow feature



031	Chrome	134	030	Copper PVD	379
239	Steel Br.	134	708	Copper Br. PVD	379
275	Matte Cipria	326	735	Warm Bronze PVD	379
273	Matte Greige	326	726	Warm Bronze Br. PVD	379
277	Glossy Ocra	326	710	Brass PVD	379
278	Glossy Coral	326	727	Brass Br. PVD	379
276	Matte Agave	326	246	Gold PVD	405
299	Matte Black	386	716	Gold Br. PVD	405
720	Nickel PVD	379	845	Dark Bronze	379
706	Black Metal PVD	379	187	Aged Bronze	379
707	Black Metal Br. PVD	379	713	Antique Brass	379


GESSI
drawing for fashion designers
ANELLO

63301



Single lever washbasin mixer with pop-up assembly
- Spout projection 5”
- Height 6-5/8”
- 1-1/4” D. pop-up drain and flexible hoses with 9/16” – 24 UNEF connections.
- Max flow rate 1.2 GPM
- ADA compliant

031	Chrome	949	708	Copper Br. PVD	1.498
149	Finox Br. Nickel	1.278	735	Warm Bronze PVD	1.402
299	Matte Black	1.278	726	Warm Bronze Br. PVD	1.498
720	Nickel PVD	1.402	710	Brass PVD	1.402
706	Black Metal PVD	1.402	727	Brass Br. PVD	1.498
707	Black Metal Br. PVD	1.498	187	Aged Bronze	1.498
030	Copper PVD	1.402	713	Antique Brass	1.498

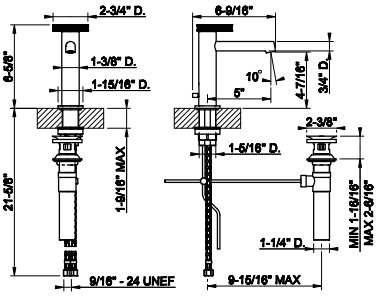

63302



Single lever washbasin mixer without pop-up assembly
- Spout projection 5”
- Height 6-5/8”
- Drain not included - See DRAINS section
- Max flow rate 1.2 GPM
- ADA compliant

031	Chrome	855	708	Copper Br. PVD	1.348
149	Finox Br. Nickel	1.154	735	Warm Bronze PVD	1.263
299	Matte Black	1.154	726	Warm Bronze Br. PVD	1.348
720	Nickel PVD	1.263	710	Brass PVD	1.263
706	Black Metal PVD	1.263	727	Brass Br. PVD	1.348
707	Black Metal Br. PVD	1.348	187	Aged Bronze	1.348
030	Copper PVD	1.263	713	Antique Brass	1.348

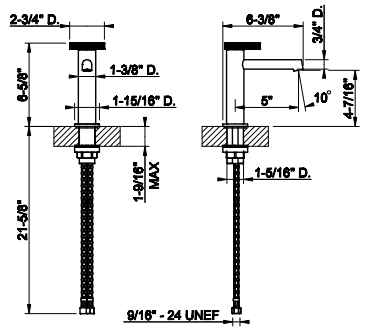

63304



Tall single lever washbasin mixer without pop-up assembly
- Spout projection 5”
- Height 12-9/16”
- Drain not included - See DRAINS section
- Max flow rate 1.2 GPM
- ADA compliant

031	Chrome	1.107	708	Copper Br. PVD	1.746
149	Finox Br. Nickel	1.494	735	Warm Bronze PVD	1.638
299	Matte Black	1.494	726	Warm Bronze Br. PVD	1.746
720	Nickel PVD	1.638	710	Brass PVD	1.638
706	Black Metal PVD	1.638	727	Brass Br. PVD	1.746
707	Black Metal Br. PVD	1.746	187	Aged Bronze	1.746
030	Copper PVD	1.638	713	Antique Brass	1.746

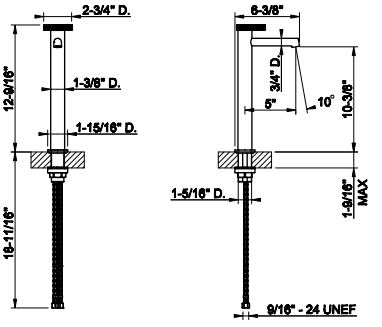

63306



Tall single lever washbasin mixer without pop-up assembly
- Spout projection 6-7/8”
- Height 12-9/16”
- Drain not included - SeeDRAINS section
- Max flow rate 1.2 GPM
- ADA compliant

031	Chrome	1.137	708	Copper Br. PVD	1.798
149	Finox Br. Nickel	1.535	735	Warm Bronze PVD	1.683
299	Matte Black	1.535	726	Warm Bronze Br. PVD	1.798
720	Nickel PVD	1.683	710	Brass PVD	1.683
706	Black Metal PVD	1.683	727	Brass Br. PVD	1.798
707	Black Metal Br. PVD	1.798	187	Aged Bronze	1.798
030	Copper PVD	1.683	713	Antique Brass	1.798

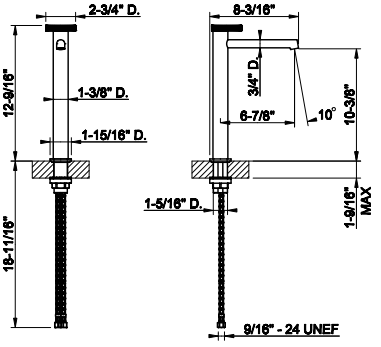

ANELLO

63315

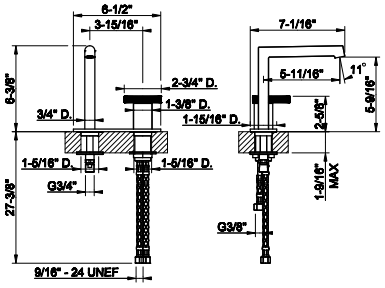

Deck-mounted washbasin mixer with separate control without pop-up assembly
- Spout projection 5-11/16”
- Height 6-3/8”
- Drain notincluded - See DRAINS section
- Max flow rate 1.2 GPM
- ADA compliant



031	Chrome	1.308	708	Copper Br. PVD	2.068
149	Finox Br. Nickel	1.767	735	Warm Bronze PVD	1.937
299	Matte Black	1.767	726	Warm Bronze Br. PVD	2.068
720	Nickel PVD	1.937	710	Brass PVD	1.937
706	Black Metal PVD	1.937	727	Brass Br. PVD	2.068
707	Black Metal Br. PVD	2.068	187	Aged Bronze	2.068
030	Copper PVD	1.937	713	Antique Brass	2.068

63351

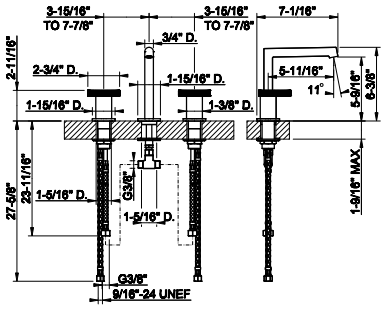

Widespread washbasin mixer without pop-up assembly
- Spout projection 5-11/16”
- Height 6-3/8”
- Drain not included - See DRAINSsection
- Max flow rate 1.2 GPM
- ADA compliant



031	Chrome	1.998	708	Copper Br. PVD	3.157
149	Finox Br. Nickel	2.698	735	Warm Bronze PVD	2.957
299	Matte Black	2.698	726	Warm Bronze Br. PVD	3.157
720	Nickel PVD	2.957	710	Brass PVD	2.957
706	Black Metal PVD	2.957	727	Brass Br. PVD	3.157
707	Black Metal Br. PVD	3.157	187	Aged Bronze	3.157
030	Copper PVD	2.957	713	Antique Brass	3.157

63353

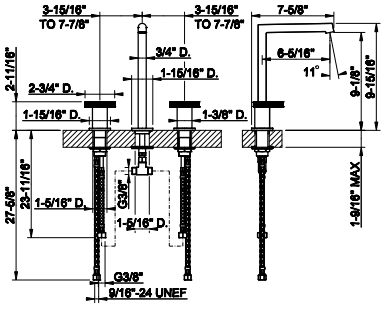

Widespread washbasin mixer without pop-up assembly
- Spout projection 6-5/16”
- Height 9-15/16”
- Drain not included - See DRAINSsection
- Max flow rate 1.2 GPM
- ADA compliant



031	Chrome	1.998	708	Copper Br. PVD	3.157
149	Finox Br. Nickel	2.698	735	Warm Bronze PVD	2.957
299	Matte Black	2.698	726	Warm Bronze Br. PVD	3.157
720	Nickel PVD	2.957	710	Brass PVD	2.957
706	Black Metal PVD	2.957	727	Brass Br. PVD	3.157
707	Black Metal Br. PVD	3.157	187	Aged Bronze	3.157
030	Copper PVD	2.957	713	Antique Brass	3.157

63321

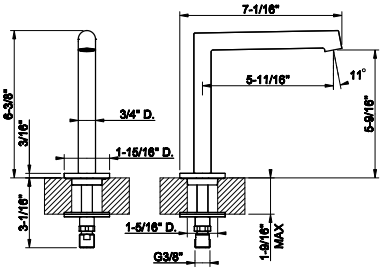

Deck-mounted washbasin spout only without pop-up assembly
- Spout projection 5-11/16”
- Height 6-3/8”
- 1/2” connections
- Drain not included - See DRAINS section
- Requires handle kit
- Max flow rate 1.2 GPM



031	Chrome	529	708	Copper Br. PVD	838
149	Finox Br. Nickel	718	735	Warm Bronze PVD	787
299	Matte Black	718	726	Warm Bronze Br. PVD	838
720	Nickel PVD	787	710	Brass PVD	787
706	Black Metal PVD	787	727	Brass Br. PVD	838
707	Black Metal Br. PVD	838	187	Aged Bronze	838
030	Copper PVD	787	713	Antique Brass	838

63323



Deck-mounted washbasin spout only without pop-up assembly
- Spout projection 6-5/16”
- Height 9-15/16”
- 1/2” connections
- Drainnot included - See DRAINS section
- Requires handle kit
- Max flow rate 1.2 GPM

031	Chrome	593	708	Copper Br. PVD	937
149	Finox Br. Nickel	800	735	Warm Bronze PVD	878
299	Matte Black	800	726	Warm Bronze Br. PVD	937
720	Nickel PVD	878	710	Brass PVD	878
706	Black Metal PVD	878	727	Brass Br. PVD	937
707	Black Metal Br. PVD	937	187	Aged Bronze	937
030	Copper PVD	878	713	Antique Brass	937

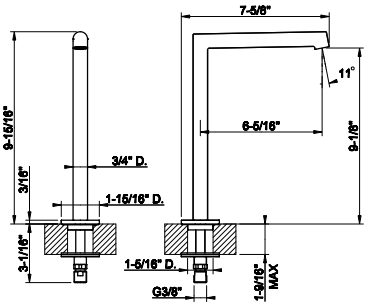

63400



Deck-mounted washbasin mixer control
- Drain not included - See DRAINS section
- ADA compliant

031	Chrome	730	708	Copper Br. PVD	1.154
149	Finox Br. Nickel	986	735	Warm Bronze PVD	1.078
299	Matte Black	986	726	Warm Bronze Br. PVD	1.154
720	Nickel PVD	1.078	710	Brass PVD	1.078
706	Black Metal PVD	1.078	727	Brass Br. PVD	1.154
707	Black Metal Br. PVD	1.154	187	Aged Bronze	1.154
030	Copper PVD	1.078	713	Antique Brass	1.154

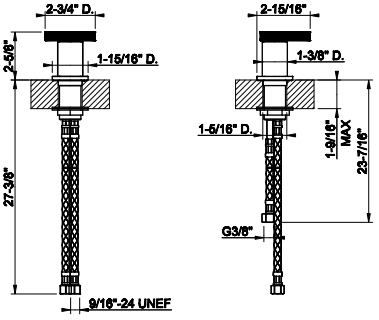

63397

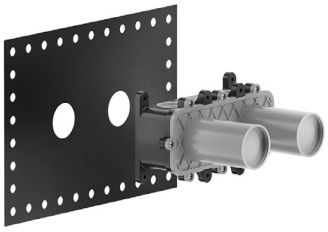

Wall-mounted washbasin mixer rough valve
- Drain not included - See DRAINS section

239	Steel Br.	900

63397+63388

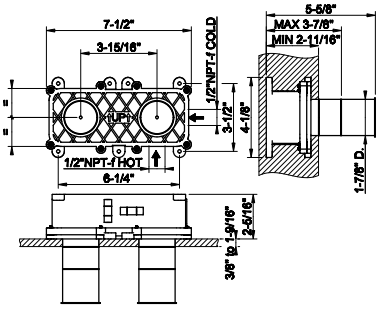

63388



TRIMS PARTS ONLY wall-mounted washbasin mixer trim, without waste
- Single backplate
- Spout projection 5-1/8” - 6-5/16”
- Drain not included - See DRAINS section
- Requires in-wall rough valve 63397
- Max flow rate 1.2 GPM
- ADA Compliant

031	Chrome	992	708	Copper Br. PVD	1.564
149	Finox Br. Nickel	1.339	735	Warm Bronze PVD	1.468
299	Matte Black	1.339	726	Warm Bronze Br. PVD	1.564
720	Nickel PVD	1.468	710	Brass PVD	1.468
706	Black Metal PVD	1.468	727	Brass Br. PVD	1.564
707	Black Metal Br. PVD	1.564	187	Aged Bronze	1.564
030	Copper PVD	1.468	713	Antique Brass	1.564

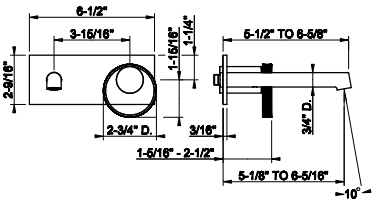

63397+63381

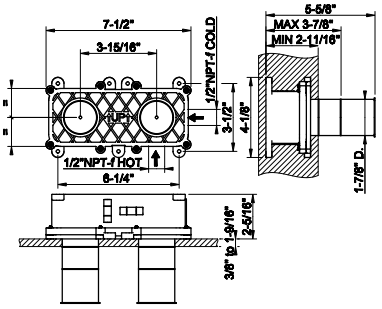

63397

Wall-mounted washbasin mixer rough valve
- Drain not included - See DRAINS section

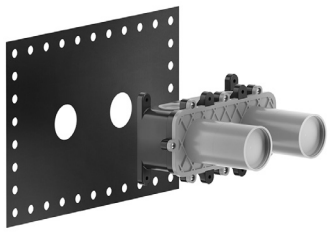

239	Steel Br.	900

63381

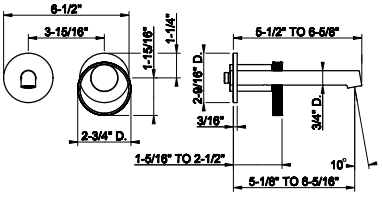

TRIMS PARTS ONLY wall-mounted washbasin mixer trim, without waste
- Separate backplate
- Spout projection 5-1/8" - 6-5/16"
- Drainnot included - See DRAINS section
- Requires in-wall rough valve 63397
- Max flow rate 1.2 GPM
- ADA Compliant



031	Chrome	857	708	Copper Br. PVD	1.353
149	Finox Br. Nickel	1.156	735	Warm Bronze PVD	1.269
299	Matte Black	1.156	726	Warm Bronze Br. PVD	1.353
720	Nickel PVD	1.269	710	Brass PVD	1.269
706	Black Metal PVD	1.269	727	Brass Br. PVD	1.353
707	Black Metal Br. PVD	1.353	187	Aged Bronze	1.353
030	Copper PVD	1.269	713	Antique Brass	1.353

63403

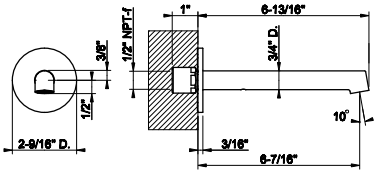

Wall-mounted washbasin spout only
- Projection 6-7/16"
- 1/2" connections
- Drain not included - See DRAINS section
- Requires mixercontrol
- Max flow rate 1.2 GPM



031	Chrome	405	708	Copper Br. PVD	640
149	Finox Br. Nickel	550	735	Warm Bronze PVD	601
299	Matte Black	550	726	Warm Bronze Br. PVD	640
720	Nickel PVD	601	710	Brass PVD	601
706	Black Metal PVD	601	727	Brass Br. PVD	640
707	Black Metal Br. PVD	640	187	Aged Bronze	640
030	Copper PVD	601	713	Antique Brass	640

63404

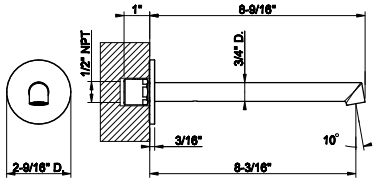

Long wall-mounted spout basin



031	Chrome	426	708	Copper Br. PVD	671
149	Finox Br. Nickel	573	735	Warm Bronze PVD	628
299	Matte Black	573	726	Warm Bronze Br. PVD	671
720	Nickel PVD	628	710	Brass PVD	628
706	Black Metal PVD	628	727	Brass Br. PVD	671
707	Black Metal Br. PVD	671	187	Aged Bronze	671
030	Copper PVD	628	713	Antique Brass	671



63399

Ceiling-mounted washbasin spout only
- Spout length 63”
- Drain not included - See DRAINS section
- Requires mixer control
- Maxflow rate 1.2 gpm

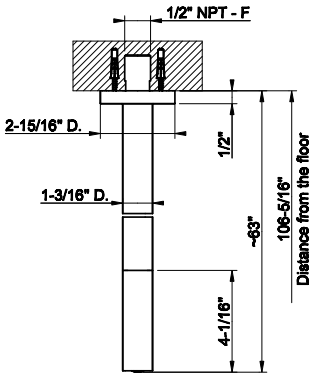

031	Chrome	1.777	030	Copper PVD	2.631
275	Matte Cipria	2.279	708	Copper Br. PVD	2.806
273	Matte Greige	2.279	735	Warm Bronze PVD	2.631
277	Glossy Ocra	2.666	726	Warm Bronze Br. PVD	2.806
278	Glossy Coral	2.666	710	Brass PVD	2.631
276	Matte Agave	2.279	727	Brass Br. PVD	2.806
149	Finox Br. Nickel	2.399	246	Gold PVD	2.986
299	Matte Black	2.399	716	Gold Br. PVD	2.986
720	Nickel PVD	2.631	845	Dark Bronze	2.666
706	Black Metal PVD	2.631	187	Aged Bronze	2.806
707	Black Metal Br. PVD	2.806	713	Antique Brass	2.806



63499

Ceiling-mounted washbasin spout only
- Custom length: Minimum 5-15/16” - Maximum 74-13/16”
- Drain not included - See DRAINS section
- Requires mixer control
- Max flow rate 1.2 gpm

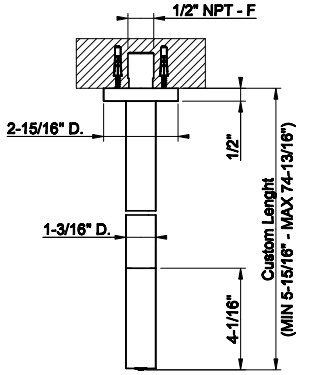

031	Chrome	2.548	030	Copper PVD	3.769
275	Matte Cipria	3.439	708	Copper Br. PVD	4.022
273	Matte Greige	3.439	735	Warm Bronze PVD	3.769
277	Glossy Ocra	3.439	726	Warm Bronze Br. PVD	4.022
278	Glossy Coral	3.439	710	Brass PVD	3.769
276	Matte Agave	3.439	727	Brass Br. PVD	4.022
149	Finox Br. Nickel	3.439	246	Gold PVD	4.281
299	Matte Black	3.439	716	Gold Br. PVD	4.281
720	Nickel PVD	3.769	845	Dark Bronze	4.022
706	Black Metal PVD	3.769	187	Aged Bronze	4.022
707	Black Metal Br. PVD	4.022	713	Antique Brass	4.022

ANELLO

48189+63328

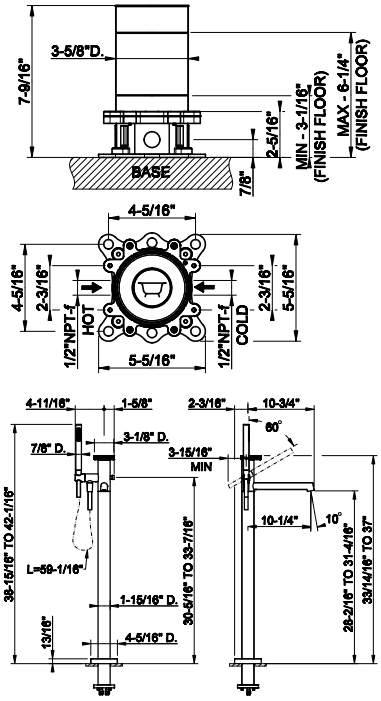

48189

Floor-mounted tub filler in-floor rough valve



031	Chrome	847

63328

TRIM PARTS ONLY floor-mounted tub filler
- Handshower
- 59” flex hose
- diverter
- Spout projection 10-1/4”
- Handshower max flow rate 1.75 GPM
- Spout mixed flow rate 6 GPM at 60 PSI
- Requires in-floor rough valve 48189



031	Chrome	4.063	708	Copper Br. PVD	6.421
149	Finox Br. Nickel	5.485	735	Warm Bronze PVD	6.014
299	Matte Black	5.485	726	Warm Bronze Br. PVD	6.421
720	Nickel PVD	6.014	710	Brass PVD	6.014
706	Black Metal PVD	6.014	727	Brass Br. PVD	6.421
707	Black Metal Br. PVD	6.421	187	Aged Bronze	6.421
030	Copper PVD	6.014	713	Antique Brass	6.421

54055

Wall-mounted Basin/bath mixer rough valve. One exit

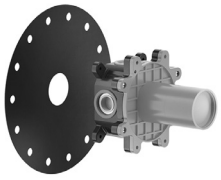

239	Steel Br.	563

54055+63361

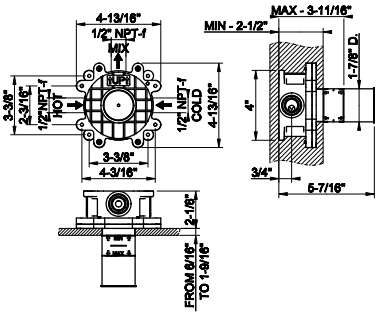

63361



TRIM PARTS ONLY Wall mounted mixer control with Ø35 cartridge
- For basin and bath spouts
- 1/2” connections
- Drain not included- see DRAINS section
- Requires in-wall rough valve 54055
- ADA compliant

031	Chrome	503	708	Copper Br. PVD	795
149	Finox Br. Nickel	682	735	Warm Bronze PVD	747
299	Matte Black	682	726	Warm Bronze Br. PVD	795
720	Nickel PVD	747	710	Brass PVD	747
706	Black Metal PVD	747	727	Brass Br. PVD	795
707	Black Metal Br. PVD	795	187	Aged Bronze	795
030	Copper PVD	747	713	Antique Brass	795

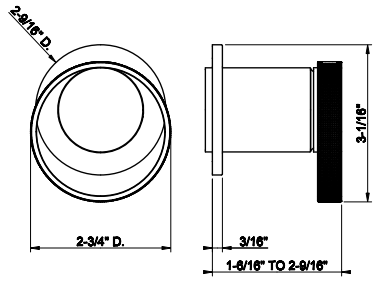

63603



Wall-mounted Bath spout only
- 1/2” connection with separate control (not included)
- Spout projection 7-9/16”
- Drain not included - See DRAINS section
- Requires mixer control
- Flow rate 6.4 GPM at 60 PSI

031	Chrome	469	708	Copper Br. PVD	740
149	Finox Br. Nickel	633	735	Warm Bronze PVD	695
299	Matte Black	633	726	Warm Bronze Br. PVD	740
720	Nickel PVD	695	710	Brass PVD	695
706	Black Metal PVD	695	727	Brass Br. PVD	740
707	Black Metal Br. PVD	740	187	Aged Bronze	740
030	Copper PVD	695	713	Antique Brass	740

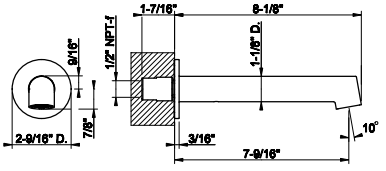

54139+63343

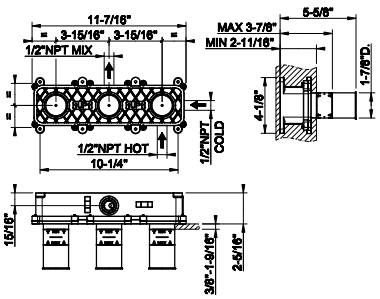

54139

Wall-mounted bath mixer control rough valve
- 1/2" connections
- Non positive shut off



239	Steel Br.	1.087

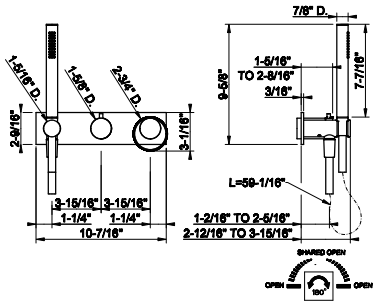

63343

TRIM PARTS ONLY. Wall-mounted bath mixer control
- Single backplate
- Two-way diverter
- Water outlet
- Handshower max flow rate 1.75 GPM
- Requires inline Pressure Balance



031	Chrome	2.005	708	Copper Br. PVD	3.166
149	Finox Br. Nickel	2.706	735	Warm Bronze PVD	2.966
299	Matte Black	2.706	726	Warm Bronze Br. PVD	3.166
720	Nickel PVD	2.966	710	Brass PVD	2.966
706	Black Metal PVD	2.966	727	Brass Br. PVD	3.166
707	Black Metal Br. PVD	3.166	187	Aged Bronze	3.166
030	Copper PVD	2.966	713	Antique Brass	3.166

54139+63345

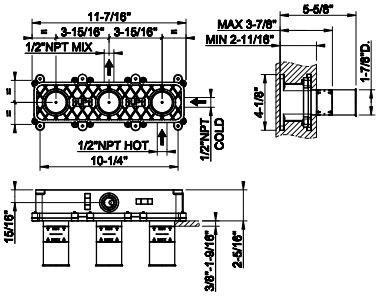

54139

Wall-mounted bath mixer control rough valve
- 1/2" connections
- Non positive shut off



239	Steel Br.	1.087

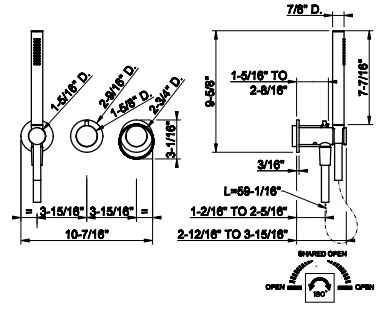

63345

TRIM PARTS ONLY. Wall-mounted bath mixer control
- Separate backplate
- Two-way diverter
- Water outlet
- Handshower max flow rate1.75 GPM
- Requires inline Pressure Balance



031	Chrome	1.827	708	Copper Br. PVD	2.885
149	Finox Br. Nickel	2.466	735	Warm Bronze PVD	2.702
299	Matte Black	2.466	726	Warm Bronze Br. PVD	2.885
720	Nickel PVD	2.702	710	Brass PVD	2.702
706	Black Metal PVD	2.702	727	Brass Br. PVD	2.885
707	Black Metal Br. PVD	2.885	187	Aged Bronze	2.885
030	Copper PVD	2.702	713	Antique Brass	2.885

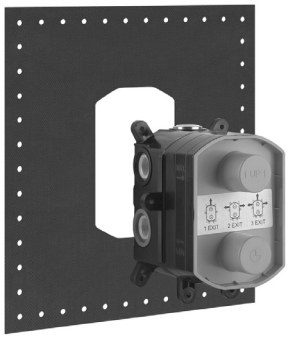

09279

In-wall thermostatic rough valve for 1/2/3-way diverter function
- 1/2” connections
- Vertical application
- Anti-scalding
- Non-Shared function

031	Chrome	877

09279+63133

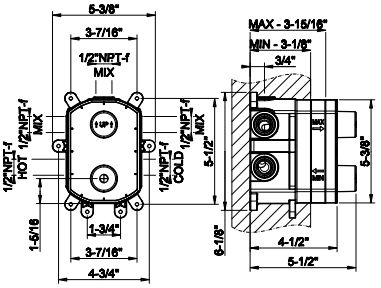



63133

TRIM PARTS ONLY External parts for thermostatic with single volume control DIAMANTATO.
- Single backplate
- 1/2” connections
- Vertical application
- Anti-scalding
- Requires in-wall rough valve 09279

031	Chrome	1.707	708	Copper Br. PVD	2.697
149	Finox Br. Nickel	2.305	735	Warm Bronze PVD	2.527
299	Matte Black	2.305	726	Warm Bronze Br. PVD	2.697
720	Nickel PVD	2.527	710	Brass PVD	2.527
706	Black Metal PVD	2.527	727	Brass Br. PVD	2.697
707	Black Metal Br. PVD	2.697	187	Aged Bronze	2.697
030	Copper PVD	2.527	713	Antique Brass	2.697

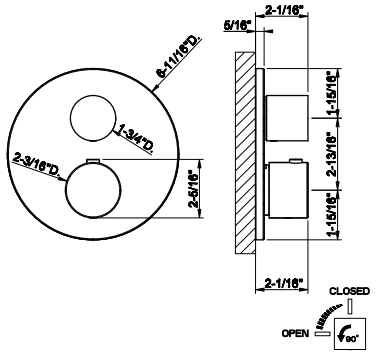

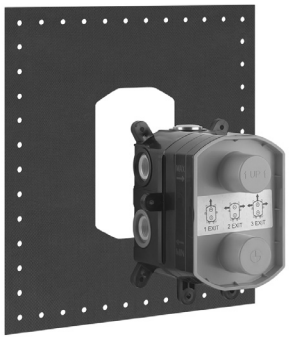

09279

In-wall thermostatic rough valve for 1/2/3-way diverter function
- 1/2” connections
- Vertical application
- Anti-scalding
- Non-Shared function

031	Chrome	877

09279+63135

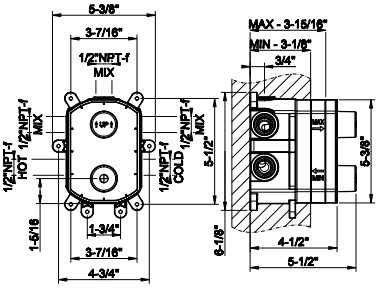



63135

TRIM PARTS ONLY External parts for 2-way diverterthermostatic and volume control DIAMANTATO.
- Single backplate
- 1/2” connections
- Vertical application
- Anti-scalding
- Requires in-wall rough valve 09279

031	Chrome	1.707	708	Copper Br. PVD	2.697
149	Finox Br. Nickel	2.305	735	Warm Bronze PVD	2.527
299	Matte Black	2.305	726	Warm Bronze Br. PVD	2.697
720	Nickel PVD	2.527	710	Brass PVD	2.527
706	Black Metal PVD	2.527	727	Brass Br. PVD	2.697
707	Black Metal Br. PVD	2.697	187	Aged Bronze	2.697
030	Copper PVD	2.527	713	Antique Brass	2.697

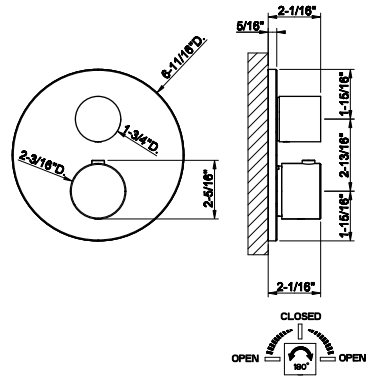

ANELLO

09279+63137

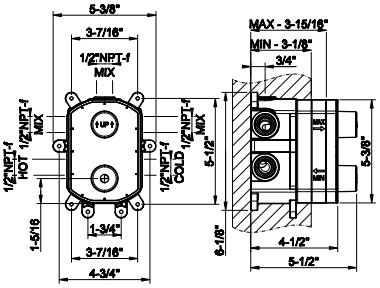

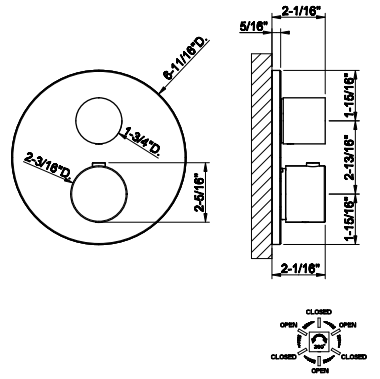

09279

In-wall thermostatic rough valve for 1/2/3-way diverter function
- 1/2” connections
- Vertical application
- Anti-scalding
- Non-Shared function

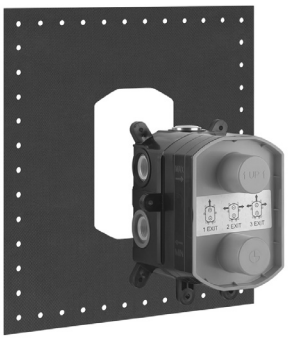

031	Chrome	877

63137

TRIM PARTS ONLY External parts for 3-way diverterthermostatic and volume control DIAMANTATO.
- Single backplate
- 1/2” connections
- Vertical application
- Anti-scalding
- Requires in-wall rough valve 09279



031	Chrome	1.707	708	Copper Br. PVD	2.697
149	Finox Br. Nickel	2.305	735	Warm Bronze PVD	2.527
299	Matte Black	2.305	726	Warm Bronze Br. PVD	2.697
720	Nickel PVD	2.527	710	Brass PVD	2.527
706	Black Metal PVD	2.527	727	Brass Br. PVD	2.697
707	Black Metal Br. PVD	2.697	187	Aged Bronze	2.697
030	Copper PVD	2.527	713	Antique Brass	2.697

54169+63331

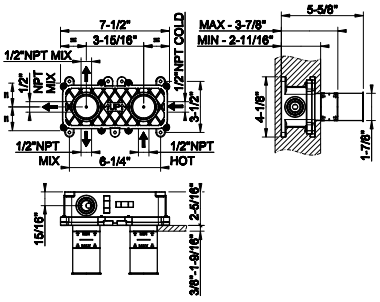

54169

In-wall thermostatic rough valve for 1/2/3-way diverter function
- 1/2” connections
- Anti-scalding
- Service stops not included
- Non-Shared Function

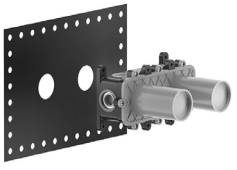

239	Steel Br.	843

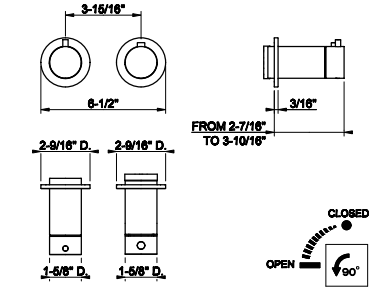

63331

TRIM PARTS ONLY External parts for thermostatic with singlevolume control
- Single backplate
- 1/2” connections
- Anti-scalding
- Requires in-wall rough valve 54169



031	Chrome	1.468	708	Copper Br. PVD	2.318
149	Finox Br. Nickel	1.982	735	Warm Bronze PVD	2.174
299	Matte Black	1.982	726	Warm Bronze Br. PVD	2.318
720	Nickel PVD	2.174	710	Brass PVD	2.174
706	Black Metal PVD	2.174	727	Brass Br. PVD	2.318
707	Black Metal Br. PVD	2.318	187	Aged Bronze	2.318
030	Copper PVD	2.174	713	Antique Brass	2.318

54169

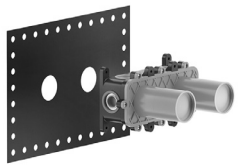

In-wall thermostatic rough valve for 1/2/3-way diverter function
- 1/2” connections
- Anti-scalding
- Service stops not included
- Non-Shared Function

239	Steel Br.	843

54169+63332

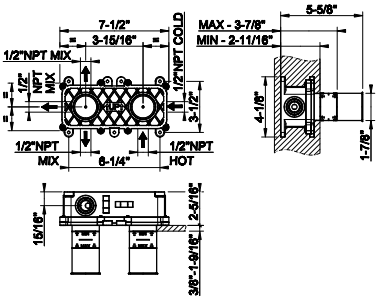

63332



TRIMS PARTS ONLY External parts for thermostatic with single volume control
- Single backplates
- 1/2” connections
- Anti-scalding
- Requires in-wall rough valve 54169

031	Chrome	1.625	708	Copper Br. PVD	2.567
149	Finox Br. Nickel	2.194	735	Warm Bronze PVD	2.403
299	Matte Black	2.194	726	Warm Bronze Br. PVD	2.567
720	Nickel PVD	2.403	710	Brass PVD	2.403
706	Black Metal PVD	2.403	727	Brass Br. PVD	2.567
707	Black Metal Br. PVD	2.567	187	Aged Bronze	2.567
030	Copper PVD	2.403	713	Antique Brass	2.567

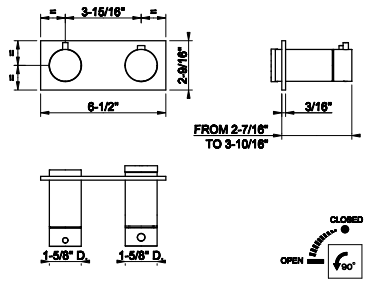

54169

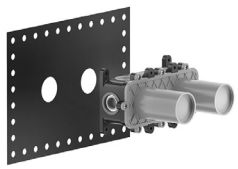

In-wall thermostatic rough valve for 1/2/3-way diverter function
- 1/2” connections
- Anti-scalding
- Service stops not included
- Non-Shared Function

239	Steel Br.	843

54169+63333

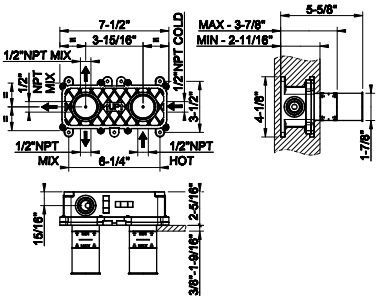

63333



TRIM PARTS ONLY External parts for 2-way diverterthermostatic and volume control
- Single backplate
- 1/2” connections
- Anti-scalding
- Requires in-wall rough valve 54169

031	Chrome	1.468	708	Copper Br. PVD	2.318
149	Finox Br. Nickel	1.982	735	Warm Bronze PVD	2.174
299	Matte Black	1.982	726	Warm Bronze Br. PVD	2.318
720	Nickel PVD	2.174	710	Brass PVD	2.174
706	Black Metal PVD	2.174	727	Brass Br. PVD	2.318
707	Black Metal Br. PVD	2.318	187	Aged Bronze	2.318
030	Copper PVD	2.174	713	Antique Brass	2.318

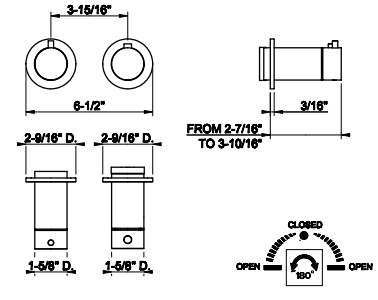

54169+63334

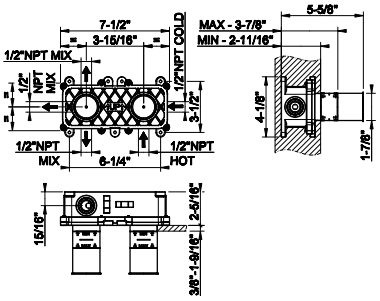

54169

In-wall thermostatic rough valve for 1/2/3-way diverter function
- 1/2” connections
- Anti-scalding
- Service stops not included
- Non-Shared Function

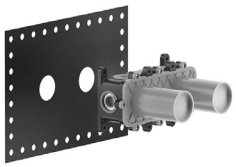

239	Steel Br.	843

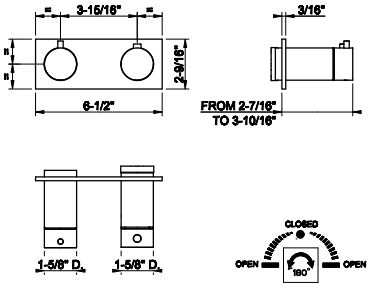

63334

TRIMS PARTS ONLY External parts for 2 -way diverter thermostatic and volume control
- Single backplates
- 1/2” connections
- Anti-scalding
- Requires in-wall rough valve 54169



031	Chrome	1.625	708	Copper Br. PVD	2.567
149	Finox Br. Nickel	2.194	735	Warm Bronze PVD	2.403
299	Matte Black	2.194	726	Warm Bronze Br. PVD	2.567
720	Nickel PVD	2.403	710	Brass PVD	2.403
706	Black Metal PVD	2.403	727	Brass Br. PVD	2.567
707	Black Metal Br. PVD	2.567	187	Aged Bronze	2.567
030	Copper PVD	2.403	713	Antique Brass	2.567

54169+63335

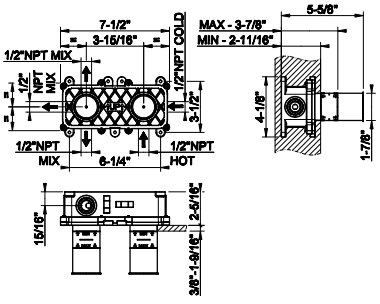

54169

In-wall thermostatic rough valve for 1/2/3-way diverter function
- 1/2” connections
- Anti-scalding
- Service stops not included
- Non-Shared Function

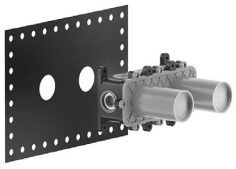

239	Steel Br.	843

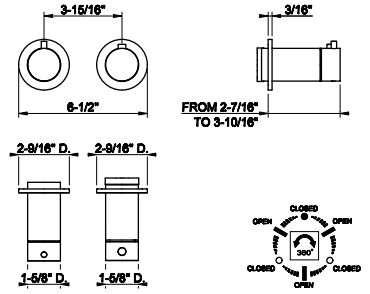

63335

TRIM PARTS ONLY External parts for 3-way diverter thermostatic and volume control
- Single backplate
- 1/2” connections
- Anti-scalding
- Requires in-wall rough valve 54169



031	Chrome	1.468	708	Copper Br. PVD	2.318
149	Finox Br. Nickel	1.982	735	Warm Bronze PVD	2.174
299	Matte Black	1.982	726	Warm Bronze Br. PVD	2.318
720	Nickel PVD	2.174	710	Brass PVD	2.174
706	Black Metal PVD	2.174	727	Brass Br. PVD	2.318
707	Black Metal Br. PVD	2.318	187	Aged Bronze	2.318
030	Copper PVD	2.174	713	Antique Brass	2.318

54169

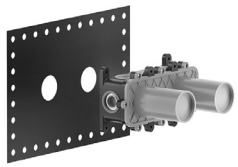

In-wall thermostatic rough valve for 1/2/3-way diverter function
- 1/2” connections
- Anti-scalding
- Service stops not included
- Non-Shared Function

239	Steel Br.	843

54169+63336

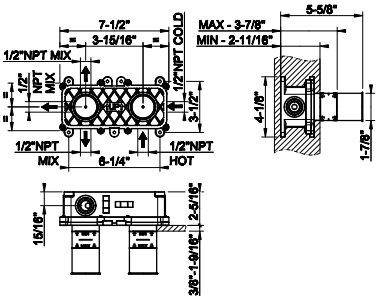

63336



TRIMS PARTS ONLY External parts for 3 -way diverter thermostatic and volume control
- Single backplates
- 1/2” connections
- Anti-scalding
- Requires in-wall rough valve 54169

031	Chrome	1.625	708	Copper Br. PVD	2.567
149	Finox Br. Nickel	2.194	735	Warm Bronze PVD	2.403
299	Matte Black	2.194	726	Warm Bronze Br. PVD	2.567
720	Nickel PVD	2.403	710	Brass PVD	2.403
706	Black Metal PVD	2.403	727	Brass Br. PVD	2.567
707	Black Metal Br. PVD	2.567	187	Aged Bronze	2.567
030	Copper PVD	2.403	713	Antique Brass	2.567

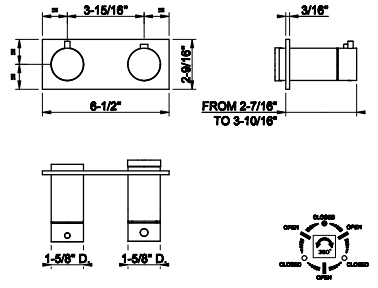

09272



In-wall single exit pressure balance rough valve
- 1/2” connections

031	Chrome	371

09272+63373

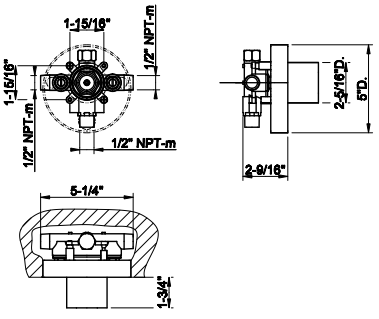

63373



TRIM PARTS ONLY External parts for single exit pressure balance
- Single backplate
- 1/2” connections
- Requires in-wall rough valve 09272
- ADA compliant

031	Chrome	552	708	Copper Br. PVD	873
149	Finox Br. Nickel	747	735	Warm Bronze PVD	818
299	Matte Black	747	726	Warm Bronze Br. PVD	873
720	Nickel PVD	818	710	Brass PVD	818
706	Black Metal PVD	818	727	Brass Br. PVD	873
707	Black Metal Br. PVD	873	187	Aged Bronze	873
030	Copper PVD	818	713	Antique Brass	873

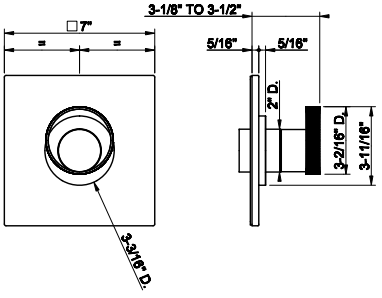

ANELLO

09274+63374

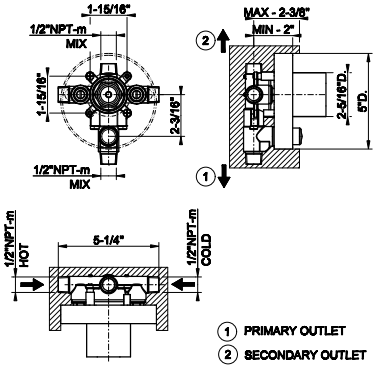

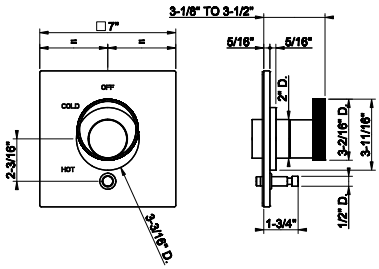

09274

In-wall pressure balance rough valve with 2-way diverter
- 1/2” connections
- Non-Shared Function



031	Chrome	443

63374

TRIM PARTS ONLY External parts for pressure balance with 2-way diverter
- Single backplate
- 1/2” connections
- Requires in-wall rough valve 09274



031	Chrome	960	708	Copper Br. PVD	1.516
149	Finox Br. Nickel	1.297	735	Warm Bronze PVD	1.421
299	Matte Black	1.297	726	Warm Bronze Br. PVD	1.516
720	Nickel PVD	1.421	710	Brass PVD	1.421
706	Black Metal PVD	1.421	727	Brass Br. PVD	1.516
707	Black Metal Br. PVD	1.516	187	Aged Bronze	1.516
030	Copper PVD	1.421	713	Antique Brass	1.516

39693+39752

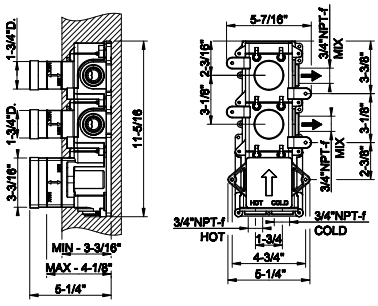

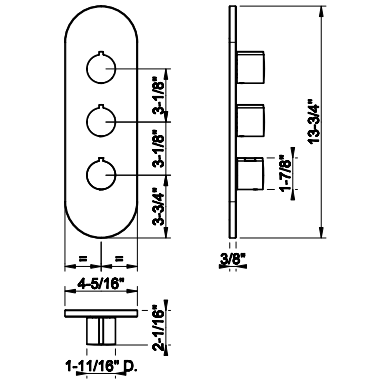

39693

In-wall thermostatic rough valve with 2 volume controls
- High capacity
- 3/4” connections
- Vertical/Horizontal application
- Anti-scalding

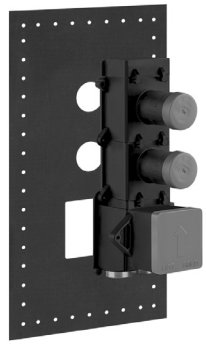

031	Chrome	1.903

39752

TRIM PARTS ONLY External parts for thermostatic with 2 volume controls
- Single backplate
- High Capacity
- 3/4” connections
- Vertical/horizontal application
- Anti-scalding
- Requires in-wall rough valve 39693



031	Chrome	2.197	708	Copper Br. PVD	3.471
149	Finox Br. Nickel	2.966	735	Warm Bronze PVD	3.252
299	Matte Black	2.966	726	Warm Bronze Br. PVD	3.471
720	Nickel PVD	3.252	710	Brass PVD	3.252
706	Black Metal PVD	3.252	727	Brass Br. PVD	3.471
707	Black Metal Br. PVD	3.471	187	Aged Bronze	3.471
030	Copper PVD	3.252	713	Antique Brass	3.471

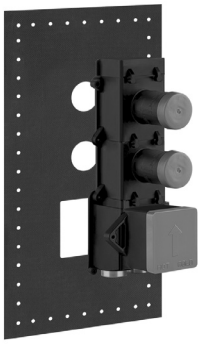

39693

In-wall thermostatic rough valve with 2 volume controls
- High capacity
- 3/4” connections
- Vertical/Horizontal application
- Anti-scalding

031	Chrome	1.903

39693+39644

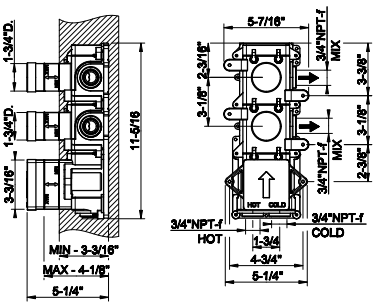



39644

TRIM PARTS ONLY External parts for thermostatic with 2 volume controls
- Separate backplate
- High Capacity
- 3/4” connections
- Vertical/horizontal application
- Anti-scalding
- Requires in-wall rough valve 39693

031	Chrome	2.149	708	Copper Br. PVD	4.178
149	Finox Br. Nickel	3.571	735	Warm Bronze PVD	3.915
299	Matte Black	3.571	726	Warm Bronze Br. PVD	4.178
720	Nickel PVD	3.915	710	Brass PVD	3.915
706	Black Metal PVD	3.915	727	Brass Br. PVD	4.178
707	Black Metal Br. PVD	4.178	187	Aged Bronze	4.178
030	Copper PVD	3.915	713	Antique Brass	4.178

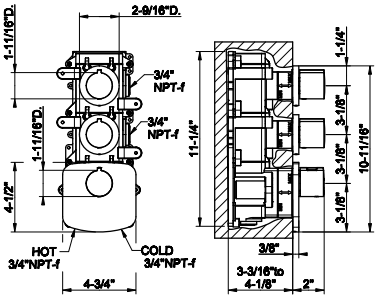

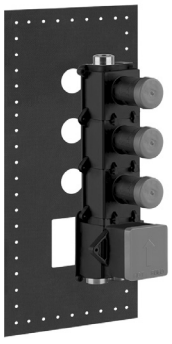

39695

In-wall thermostatic rough valve with 3 volume controls
- High capacity
- 3/4” connections
- Vertical/Horizontal application
- Anti-scalding

031	Chrome	2.197

39695+39754

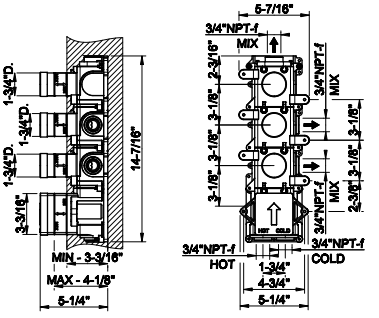



39754

TRIM PARTS ONLY External parts for thermostatic with 3 volume controls
- Single backplate
- High Capacity
- 3/4” connections
- Vertical/horizontal application
- Anti-scalding
- Requires in-wall rough valve 39695

031	Chrome	2.277	708	Copper Br. PVD	3.600
149	Finox Br. Nickel	3.076	735	Warm Bronze PVD	3.371
299	Matte Black	3.076	726	Warm Bronze Br. PVD	3.600
720	Nickel PVD	3.371	710	Brass PVD	3.371
706	Black Metal PVD	3.371	727	Brass Br. PVD	3.600
707	Black Metal Br. PVD	3.600	187	Aged Bronze	3.600
030	Copper PVD	3.371	713	Antique Brass	3.600

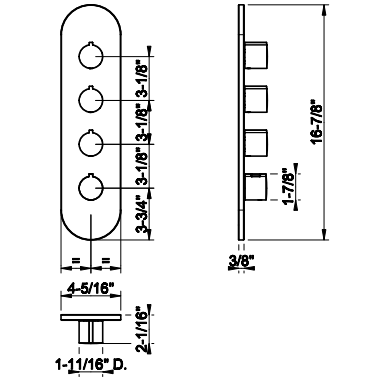

ANELLO

39695+39646

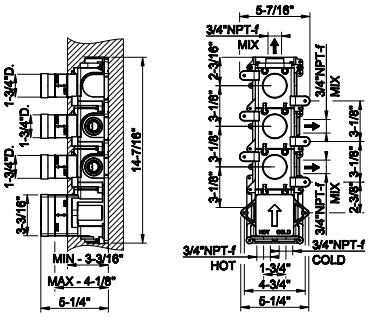

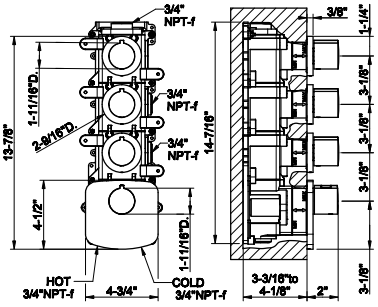

39695

In-wall thermostatic rough valve with 3 volume controls
- High capacity
- 3/4” connections
- Vertical/Horizontal application
- Anti-scalding

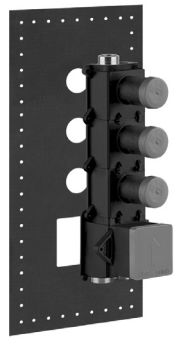

031	Chrome	2.197

39646

TRIM PARTS ONLY External parts for thermostatic with 3 volume controls
- Separate backplate
- High Capacity
- 3/4” connections
- Vertical/horizontal application
- Anti-scalding
- Requires in-wall rough valve 39695



031	Chrome	2.498	708	Copper Br. PVD	4.805
149	Finox Br. Nickel	4.107	735	Warm Bronze PVD	4.502
299	Matte Black	4.107	726	Warm Bronze Br. PVD	4.805
720	Nickel PVD	4.502	710	Brass PVD	4.502
706	Black Metal PVD	4.502	727	Brass Br. PVD	4.805
707	Black Metal Br. PVD	4.805	187	Aged Bronze	4.805
030	Copper PVD	4.502	713	Antique Brass	4.805

39699+39756

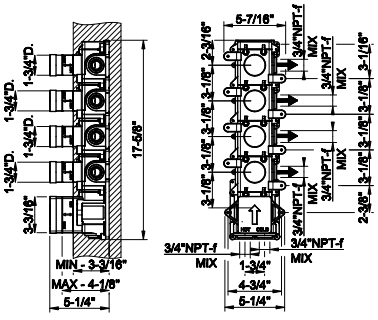

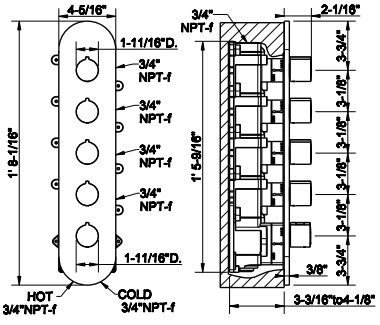

39699

In-wall thermostatic rough valve with 4 volume controls
- High capacity
- 3/4” connections
- Vertical/Horizontal application
- Anti-scalding
- Max flow rate 1.75 GPM

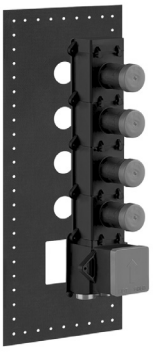

031	Chrome	2.498

39756

TRIM PARTS ONLY External parts for thermostatic with 4 volume controls
- Single backplate
- High Capacity
- 3/4” connections
- Vertical/horizontal application
- Anti-scalding
- Requires in-wall rough valve 39699



031	Chrome	2.637	708	Copper Br. PVD	4.168
149	Finox Br. Nickel	3.561	735	Warm Bronze PVD	3.904
299	Matte Black	3.561	726	Warm Bronze Br. PVD	4.168
720	Nickel PVD	3.904	710	Brass PVD	3.904
706	Black Metal PVD	3.904	727	Brass Br. PVD	4.168
707	Black Metal Br. PVD	4.168	187	Aged Bronze	4.168
030	Copper PVD	3.904	713	Antique Brass	4.168

ANELLO

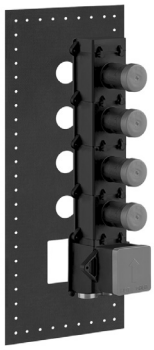

39699

In-wall thermostatic rough valve with 4 volume controls
- High capacity
- 3/4” connections
- Vertical/Horizontal application
- Anti-scalding
- Max flow rate 1.75 GPM

031	Chrome	2.498

39699+39650

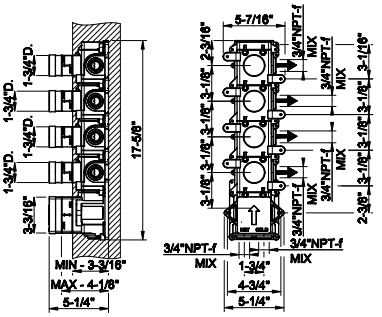



39650

TRIM PARTS ONLY External parts for thermostatic with 4 volume controls
- Separate backplate
- High Capacity
- 3/4” connections
- Vertical/horizontal application
- Anti-scalding
- Requires in-wall rough valve 39699

031	Chrome	2.829	708	Copper Br. PVD	5.745
149	Finox Br. Nickel	4.910	735	Warm Bronze PVD	5.381
299	Matte Black	4.910	726	Warm Bronze Br. PVD	5.745
720	Nickel PVD	5.381	710	Brass PVD	5.381
706	Black Metal PVD	5.381	727	Brass Br. PVD	5.745
707	Black Metal Br. PVD	5.745	187	Aged Bronze	5.745
030	Copper PVD	5.381	713	Antique Brass	5.745

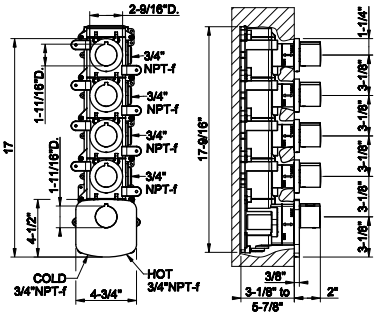

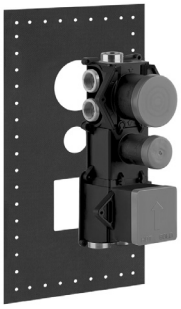

39601

In-wall thermostatic rough valve with 5-way diverter
- High capacity
- 3/4” connections
- Vertical/Horizontal application
- Anti-scalding
- Non shared function

031	Chrome	2.637

39601+39750

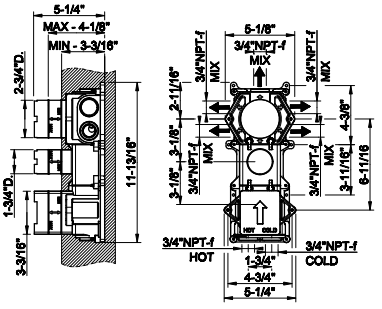



39750

TRIM PARTS ONLY External parts for 5-way thermostatic diverter with volume control
- Single backplate
- High Capacity
- 3/4” connections
- Vertical/horizontal application
- Anti-scalding
- Requires in-wall rough valve 39601

031	Chrome	2.204	708	Copper Br. PVD	3.483
149	Finox Br. Nickel	2.976	735	Warm Bronze PVD	3.262
299	Matte Black	2.976	726	Warm Bronze Br. PVD	3.483
720	Nickel PVD	3.262	710	Brass PVD	3.262
706	Black Metal PVD	3.262	727	Brass Br. PVD	3.483
707	Black Metal Br. PVD	3.483	187	Aged Bronze	3.483
030	Copper PVD	3.262	713	Antique Brass	3.483

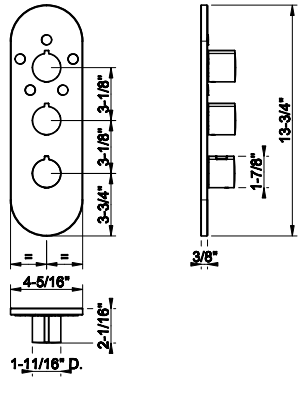

ANELLO

39681+39666

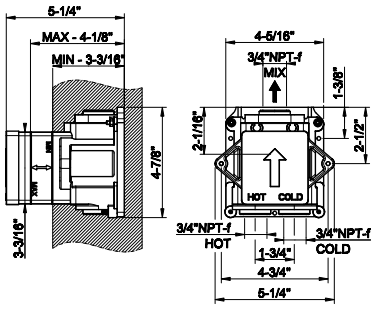

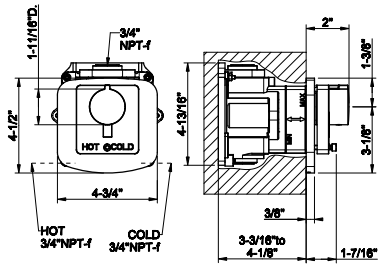

39681

In-wall thermostatic rough valve for individual mixer
- High capacity
- 3/4" connections
- Vertical/Horizontal application
- Anti-scalding

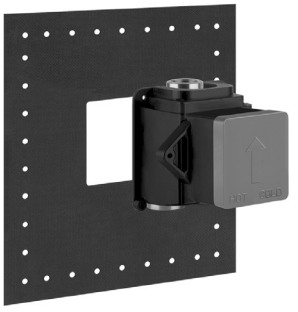

031	Chrome	1.169

39666

TRIM PARTS ONLY External parts for individual thermostatic mixer
- High Capacity
- 3/4" connections
- Vertical/horizontal application
- Anti-scalding
- Requires in-wall rough valve 39681



031	Chrome	954	708	Copper Br. PVD	1.932
149	Finox Br. Nickel	1.652	735	Warm Bronze PVD	1.811
299	Matte Black	1.652	726	Warm Bronze Br. PVD	1.932
720	Nickel PVD	1.811	710	Brass PVD	1.811
706	Black Metal PVD	1.811	727	Brass Br. PVD	1.932
707	Black Metal Br. PVD	1.932	187	Aged Bronze	1.932
030	Copper PVD	1.811	713	Antique Brass	1.932

39683+43268

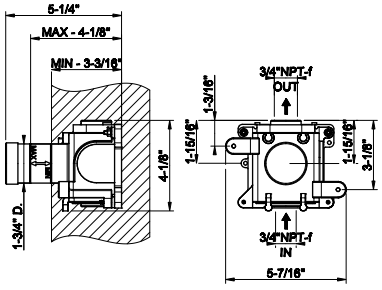

39683

In-wall thermostatic rough valve parts for volume control
- High capacity
- 3/4" connections
- Vertical/Horizontal application
- Anti-scalding

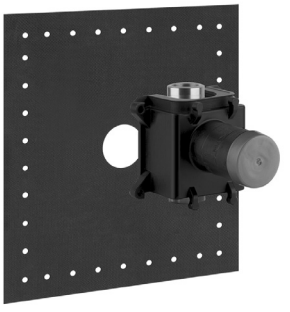

031	Chrome	582

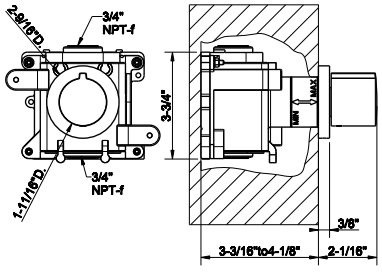

43268

TRIM PARTS ONLY External parts for individual thermostatic volume control
- Single backplate
- High Capacity
- 3/4" connections
- Vertical/horizontal application
- Anti-scalding
- Requires in-wall rough valve 39683



031	Chrome	580	708	Copper Br. PVD	1.231
149	Finox Br. Nickel	1.054	735	Warm Bronze PVD	1.154
299	Matte Black	1.054	726	Warm Bronze Br. PVD	1.231
720	Nickel PVD	1.154	710	Brass PVD	1.154
706	Black Metal PVD	1.154	727	Brass Br. PVD	1.231
707	Black Metal Br. PVD	1.231	187	Aged Bronze	1.231
030	Copper PVD	1.154	713	Antique Brass	1.231

63354



Wall-mounted adjustable shower head with arm DIAMANTATO.
•1/2" connections
•Projection from wall to center 9-5/16"
•Total projection 10-15/16"
• Max flow rate 1.75 gpm

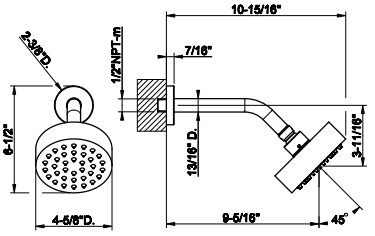

031	Chrome	1.759	708	Copper Br. PVD	2.779
149	Finox Br. Nickel	2.375	735	Warm Bronze PVD	2.604
299	Matte Black	2.375	726	Warm Bronze Br. PVD	2.779
720	Nickel PVD	2.604	710	Brass PVD	2.604
706	Black Metal PVD	2.604	727	Brass Br. PVD	2.779
707	Black Metal Br. PVD	2.779	187	Aged Bronze	2.779
030	Copper PVD	2.604	713	Antique Brass	2.779

63356



Wall-mounted adjustable multi-function shower head with arm DIAMANTATO.
•1/2" connections
•Projection from wall to center 9-11/16"
•Total projection 11-3/16"
•Max flow rate 1.75 gpm

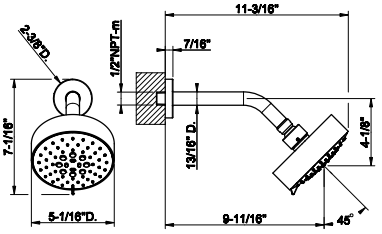

031	Chrome	2.111	708	Copper Br. PVD	3.334
149	Finox Br. Nickel	2.850	735	Warm Bronze PVD	3.124
299	Matte Black	2.850	726	Warm Bronze Br. PVD	3.334
720	Nickel PVD	3.124	710	Brass PVD	3.124
706	Black Metal PVD	3.124	727	Brass Br. PVD	3.334
707	Black Metal Br. PVD	3.334	187	Aged Bronze	3.334
030	Copper PVD	3.124	713	Antique Brass	3.334

63448



Wall-mounted adjustable shower head with arm DIAMANTATO.
• 1/2" connections.
• Projection from wall to center 13-1/2"
• Total projection 17-3/4"
• Max flow rate 1.75 GPM

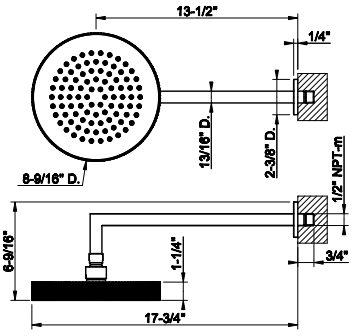

031	Chrome	2.488	708	Copper Br. PVD	3.931
149	Finox Br. Nickel	3.361	735	Warm Bronze PVD	3.685
299	Matte Black	3.361	726	Warm Bronze Br. PVD	3.931
720	Nickel PVD	3.685	710	Brass PVD	3.685
706	Black Metal PVD	3.685	727	Brass Br. PVD	3.931
707	Black Metal Br. PVD	3.931	187	Aged Bronze	3.931
030	Copper PVD	3.685	713	Antique Brass	3.931

63452



Ceiling -mounted shower head with arm DIAMANTATO.
• 1/2" connections.
• Projection from ceiling 11-1/16"
• Max flow rate 1.75 GPM

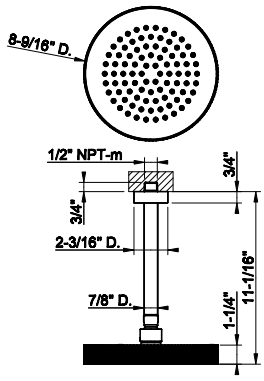

031	Chrome	2.363	708	Copper Br. PVD	3.732
149	Finox Br. Nickel	3.188	735	Warm Bronze PVD	3.495
299	Matte Black	3.188	726	Warm Bronze Br. PVD	3.732
720	Nickel PVD	3.495	710	Brass PVD	3.495
706	Black Metal PVD	3.495	727	Brass Br. PVD	3.732
707	Black Metal Br. PVD	3.732	187	Aged Bronze	3.732
030	Copper PVD	3.495	713	Antique Brass	3.732

ANELLO

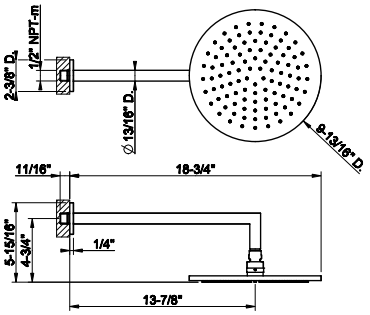

63348

Wall-mounted adjustable shower head with arm.
- 1/2" connections.
- Projection from wall to center 13-7/8"
- Total projection 18-3/4"
- Max flow rate 1.75 GPM

031	Chrome	1.087	726	Warm Bronze Br. PVD	1.715
149	Finox Br. Nickel	1.466	710	Brass PVD	1.605
299	Matte Black	1.466	727	Brass Br. PVD	1.715
720	Nickel PVD	1.605	246	Gold PVD	1.827
706	Black Metal PVD	1.605	716	Gold Br. PVD	1.827
707	Black Metal Br. PVD	1.715	845	Dark Bronze	1.715
030	Copper PVD	1.605	187	Aged Bronze	1.715
708	Copper Br. PVD	1.715	713	Antique Brass	1.715
735	Warm Bronze PVD	1.605	279	Matte White	1.466



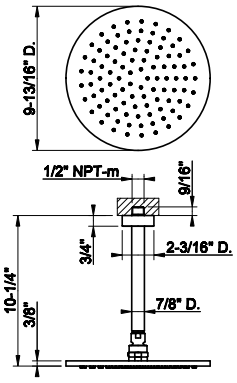

63352

Ceiling-mounted adjustable shower head with arm.
- 1/2" connections.
- Projection from ceiling 10-1/4"
- Max flow rate 1.75 GPM

031	Chrome	966	726	Warm Bronze Br. PVD	1.528
149	Finox Br. Nickel	1.306	710	Brass PVD	1.431
299	Matte Black	1.306	727	Brass Br. PVD	1.528
720	Nickel PVD	1.431	246	Gold PVD	1.624
706	Black Metal PVD	1.431	716	Gold Br. PVD	1.624
707	Black Metal Br. PVD	1.528	845	Dark Bronze	1.528
030	Copper PVD	1.431	187	Aged Bronze	1.528
708	Copper Br. PVD	1.528	713	Antique Brass	1.528
735	Warm Bronze PVD	1.431	279	Matte White	1.306



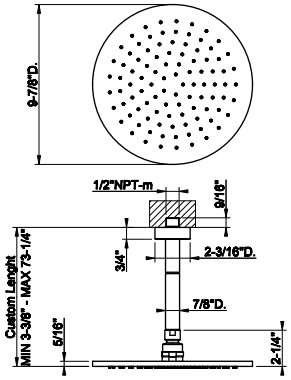

63350

Ceiling-mounted, shower head with arm, custom length
- 1/2" connections
- Projection from ceiling MIN 3-3/8" MAX 73-1/4"
- Max flow rate 1.75 GPM

031	Chrome	1.387	726	Warm Bronze Br. PVD	2.190
149	Finox Br. Nickel	1.870	710	Brass PVD	2.052
299	Matte Black	1.870	727	Brass Br. PVD	2.190
720	Nickel PVD	2.052	246	Gold PVD	2.333
706	Black Metal PVD	2.052	716	Gold Br. PVD	2.333
707	Black Metal Br. PVD	2.190	845	Dark Bronze	2.190
030	Copper PVD	2.052	187	Aged Bronze	2.190
708	Copper Br. PVD	2.190	713	Antique Brass	2.190
735	Warm Bronze PVD	2.052	279	Matte White	1.870



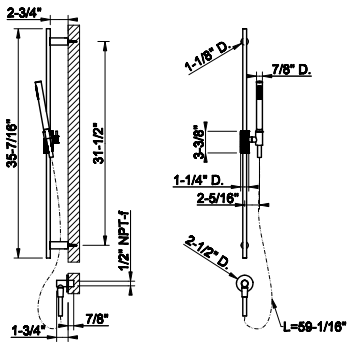

63482

Handshower and adjustable sliding rail set. DIAMANTATO
- Adjustable bar
- Adjustable hook
- 59" Flex hose
- Wall elbow
- Max flow rate 1.75 GPM.

031	Chrome	1.656	708	Copper Br. PVD	2.617
149	Finox Br. Nickel	2.236	735	Warm Bronze PVD	2.450
299	Matte Black	2.236	726	Warm Bronze Br. PVD	2.617
720	Nickel PVD	2.450	710	Brass PVD	2.450
706	Black Metal PVD	2.450	727	Brass Br. PVD	2.617
707	Black Metal Br. PVD	2.617	187	Aged Bronze	2.617
030	Copper PVD	2.450	713	Antique Brass	2.617





63329

Handshower set
- Fixed hook
- Wall elbow
- 59” flex hose
- Max flow rate 1.75 GPM

031	Chrome	847	708	Copper Br. PVD	1.337
149	Finox Br. Nickel	1.141	735	Warm Bronze PVD	1.254
299	Matte Black	1.141	726	Warm Bronze Br. PVD	1.337
720	Nickel PVD	1.254	710	Brass PVD	1.254
706	Black Metal PVD	1.254	727	Brass Br. PVD	1.337
707	Black Metal Br. PVD	1.337	187	Aged Bronze	1.337
030	Copper PVD	1.254	713	Antique Brass	1.337

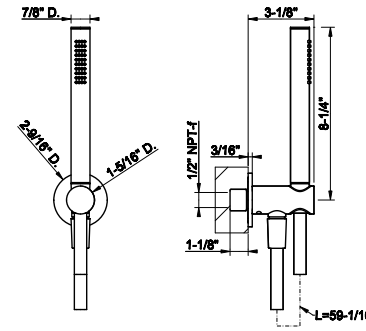



63099

Magnetic anti-limestone handshower set
- Fixed hook
- Wall elbow
- 59” Cromalux flex hose
- Max flow rate 1.75 GPM

031	Chrome	1.213	726	Warm Bronze Br. PVD	1.916
149	Finox Br. Nickel	1.638	710	Brass PVD	1.794
299	Matte Black	1.638	727	Brass Br. PVD	1.916
720	Nickel PVD	1.794	246	Gold PVD	2.037
706	Black Metal PVD	1.794	716	Gold Br. PVD	2.037
707	Black Metal Br. PVD	1.916	845	Dark Bronze	1.916
030	Copper PVD	1.794	187	Aged Bronze	1.916
708	Copper Br. PVD	1.916	713	Antique Brass	1.916
735	Warm Bronze PVD	1.794			

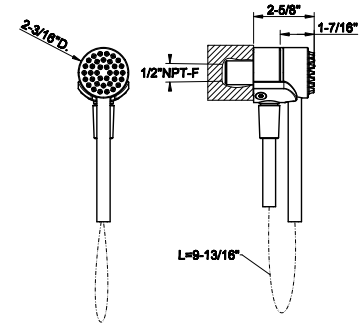



32971

Round body spray
- 1/2” connections
- Max flow rate 1 GPM at 60 PSI

031	Chrome	552	726	Warm Bronze Br. PVD	873
149	Finox Br. Nickel	746	710	Brass PVD	840
299	Matte Black	746	727	Brass Br. PVD	873
147	Chrome Br.	766	246	Gold PVD	929
720	Nickel PVD	818	716	Gold Br. PVD	929
706	Black Metal PVD	818	845	Dark Bronze	873
707	Black Metal Br. PVD	873	187	Aged Bronze	873
030	Copper PVD	818	713	Antique Brass	873
708	Copper Br. PVD	873	279	Matte White	746
735	Warm Bronze PVD	840			

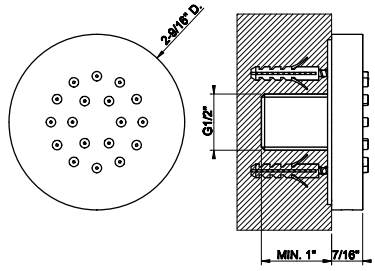

32985+32982

32985

In-wall rough valve for pivotable body spray 32982

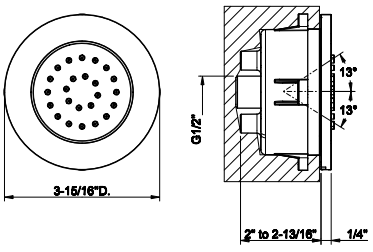



031	Chrome	406

32982

TRIM PARTS ONLY Round in-wall pivotable body spray
- 1/2” connections
- Requires in-wall rough valve 32985
- Max flow rate 1 GPM at60 PSI

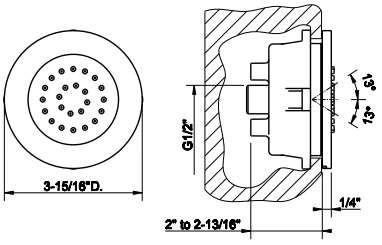



031	Chrome	773	726	Warm Bronze Br. PVD	1.223
149	Finox Br. Nickel	1.045	710	Brass PVD	1.145
299	Matte Black	1.045	727	Brass Br. PVD	1.223
147	Chrome Br.	1.045	246	Gold PVD	1.300
720	Nickel PVD	1.145	716	Gold Br. PVD	1.300
706	Black Metal PVD	1.145	845	Dark Bronze	1.223
707	Black Metal Br. PVD	1.223	187	Aged Bronze	1.223
030	Copper PVD	1.145	713	Antique Brass	1.223
708	Copper Br. PVD	1.223	279	Matte White	1.045
735	Warm Bronze PVD	1.145			

13375

Pivotable body spray
- 1/2” connections
- Max flow rate 0.9 GPM at 60 PSI

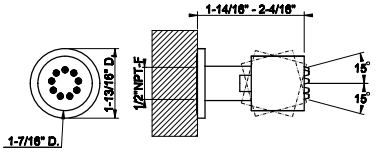



031	Chrome	405	726	Warm Bronze Br. PVD	639
149	Finox Br. Nickel	547	710	Brass PVD	598
299	Matte Black	547	727	Brass Br. PVD	639
147	Chrome Br.	547	246	Gold PVD	680
720	Nickel PVD	598	716	Gold Br. PVD	680
706	Black Metal PVD	598	845	Dark Bronze	639
707	Black Metal Br. PVD	639	187	Aged Bronze	639
030	Copper PVD	598	713	Antique Brass	639
708	Copper Br. PVD	639	279	Matte White	547
735	Warm Bronze PVD	598			

65295

Wall-fixing cascade spout
- 1/2” connections
- Flow rate 4.8 GPM at 60 PSI

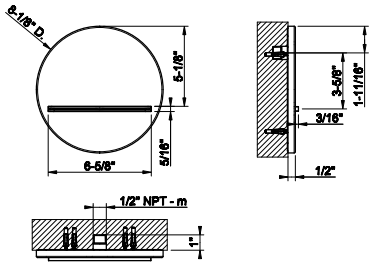



031	Chrome	1.937	726	Warm Bronze Br. PVD	3.058
149	Finox Br. Nickel	2.614	710	Brass PVD	2.864
299	Matte Black	2.614	727	Brass Br. PVD	3.058
720	Nickel PVD	2.864	246	Gold PVD	3.255
706	Black Metal PVD	2.864	716	Gold Br. PVD	3.255
707	Black Metal Br. PVD	3.058	845	Dark Bronze	3.058
030	Copper PVD	2.864	187	Aged Bronze	3.058
708	Copper Br. PVD	3.058	713	Antique Brass	3.058
735	Warm Bronze PVD	2.864	279	Matte White	2.614

20293



Wall-fixing cascade spout with separate control (not included)
- 1/2” connections
- Projection from the wall 6”
- Flow rate 4.2 GPM at 60 PSI

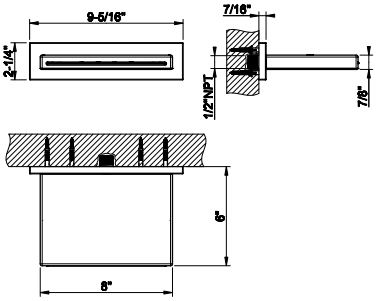

239	Steel Br.	2.966	726	Warm Bronze Br. PVD	4.687
238	Mirror Steel	2.966	710	Brass PVD	4.390
299	Matte Black	4.006	727	Brass Br. PVD	4.687
720	Nickel PVD	4.390	246	Gold PVD	4.985
706	Black Metal PVD	4.390	716	Gold Br. PVD	4.985
707	Black Metal Br. PVD	4.687	845	Dark Bronze	4.687
030	Copper PVD	4.390	187	Aged Bronze	4.687
708	Copper Br. PVD	4.687	713	Antique Brass	4.687
735	Warm Bronze PVD	4.390	279	Matte White	4.006

63461



Wall elbow with built in water intake and fixed hook
- 1/2” connection

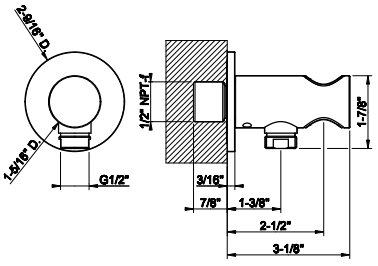

031	Chrome	457	708	Copper Br. PVD	723
149	Finox Br. Nickel	617	735	Warm Bronze PVD	677
299	Matte Black	617	726	Warm Bronze Br. PVD	723
720	Nickel PVD	677	710	Brass PVD	677
706	Black Metal PVD	677	727	Brass Br. PVD	723
707	Black Metal Br. PVD	723	187	Aged Bronze	723
030	Copper PVD	677	713	Antique Brass	723

63469



Wall-elbow with backplate
- 1/2” connection

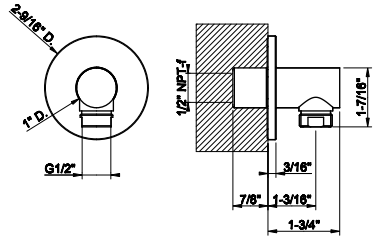

031	Chrome	298	708	Copper Br. PVD	472
149	Finox Br. Nickel	404	735	Warm Bronze PVD	443
299	Matte Black	404	726	Warm Bronze Br. PVD	472
720	Nickel PVD	443	710	Brass PVD	443
706	Black Metal PVD	443	727	Brass Br. PVD	472
707	Black Metal Br. PVD	472	187	Aged Bronze	472
030	Copper PVD	443	713	Antique Brass	472

58157



Fixed handshower hook.

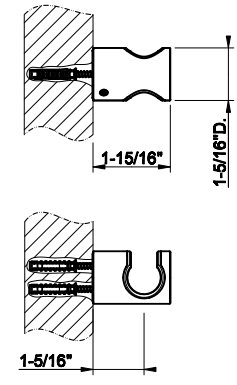

031	Chrome	245	726	Warm Bronze Br. PVD	387
149	Finox Br. Nickel	332	710	Brass PVD	363
299	Matte Black	332	727	Brass Br. PVD	387
720	Nickel PVD	363	246	Gold PVD	411
706	Black Metal PVD	363	716	Gold Br. PVD	411
707	Black Metal Br. PVD	387	845	Dark Bronze	387
030	Copper PVD	363	187	Aged Bronze	387
708	Copper Br. PVD	387	713	Antique Brass	387
735	Warm Bronze PVD	363			

ANELLO

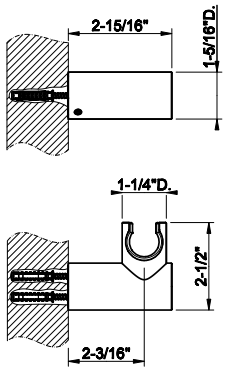

58160

Adjustable handshower hook.



031	Chrome	434	726	Warm Bronze Br. PVD	686
149	Finox Br. Nickel	586	710	Brass PVD	642
299	Matte Black	586	727	Brass Br. PVD	686
720	Nickel PVD	642	246	Gold PVD	728
706	Black Metal PVD	642	716	Gold Br. PVD	728
707	Black Metal Br. PVD	686	845	Dark Bronze	686
030	Copper PVD	642	187	Aged Bronze	686
708	Copper Br. PVD	686	713	Antique Brass	686
735	Warm Bronze PVD	642			

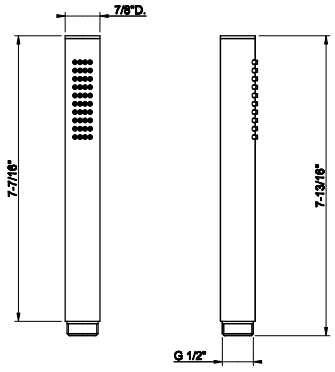

14371

Handshower
- Max flow rate 1.75 GPM



031	Chrome	268	735	Warm Bronze PVD	425
149	Finox Br. Nickel	363	726	Warm Bronze Br. PVD	450
299	Matte Black	363	710	Brass PVD	425
147	Chrome Br.	363	727	Brass Br. PVD	450
720	Nickel PVD	425	246	Gold PVD	478
706	Black Metal PVD	425	716	Gold Br. PVD	478
707	Black Metal Br. PVD	450	845	Dark Bronze	450
030	Copper PVD	425	187	Aged Bronze	450
708	Copper Br. PVD	450	713	Antique Brass	450

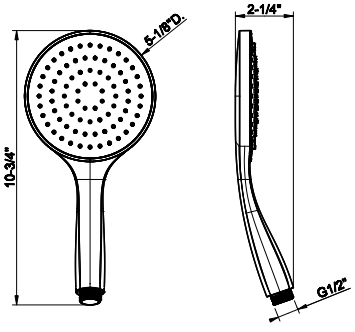

14370

Antilimestone handshower
- Single spray
- Max flow rate 1.75 GPM



031	Chrome	189	726	Warm Bronze Br. PVD	465
149	Finox Br. Nickel	377	710	Brass PVD	435
299	Matte Black	377	727	Brass Br. PVD	465
147	Chrome Br.	377	246	Gold PVD	493
720	Nickel PVD	435	716	Gold Br. PVD	493
706	Black Metal PVD	435	845	Dark Bronze	465
707	Black Metal Br. PVD	465	187	Aged Bronze	465
030	Copper PVD	435	713	Antique Brass	465
708	Copper Br. PVD	465	279	Matte White	377
735	Warm Bronze PVD	435			

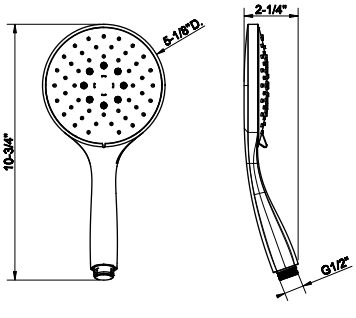

14376

Handshower with white insert
- 3-pattern spray
- Max flow rate 1.75 GPM



031	Chrome	390	726	Warm Bronze Br. PVD	656
149	Finox Br. Nickel	527	710	Brass PVD	616
299	Matte Black	527	727	Brass Br. PVD	656
147	Chrome Br.	527	246	Gold PVD	681
720	Nickel PVD	616	716	Gold Br. PVD	681
706	Black Metal PVD	616	845	Dark Bronze	656
707	Black Metal Br. PVD	656	187	Aged Bronze	656
030	Copper PVD	616	713	Antique Brass	656
708	Copper Br. PVD	656	279	Matte White	527
735	Warm Bronze PVD	616			



01637

59” flex hose

031	Chrome	134	726	Warm Bronze Br. PVD	214
149	Finox Br. Nickel	173	710	Brass PVD	203
299	Matte Black	173	727	Brass Br. PVD	214
147	Chrome Br.	173	246	Gold PVD	227
720	Nickel PVD	203	716	Gold Br. PVD	227
706	Black Metal PVD	203	845	Dark Bronze	214
707	Black Metal Br. PVD	214	187	Aged Bronze	214
030	Copper PVD	203	713	Antique Brass	214
708	Copper Br. PVD	214	279	Matte White	173
735	Warm Bronze PVD	203			

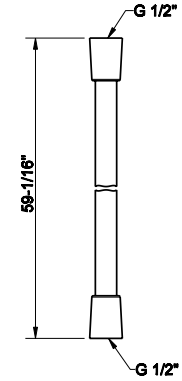



54137

59” black flex hose with options to change the metal ends with desired finish

031	Chrome	183	735	Warm Bronze PVD	290
239	Steel Br.	179	726	Warm Bronze Br. PVD	283
299	Matte Black	241	710	Brass PVD	290
720	Nickel PVD	248	727	Brass Br. PVD	283
706	Black Metal PVD	290	845	Dark Bronze	248
707	Black Metal Br. PVD	283	187	Aged Bronze	248
030	Copper PVD	290	713	Antique Brass	248
708	Copper Br. PVD	283			

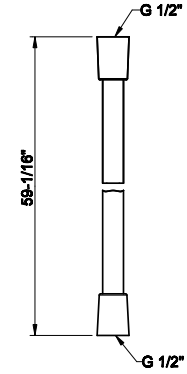



01724

Metal flexible hose, 59” length, 1/2” connector.

031	Chrome	196	726	Warm Bronze Br. PVD	308
149	Finox Br. Nickel	260	710	Brass PVD	288
299	Matte Black	260	727	Brass Br. PVD	308
147	Chrome Br.	260	246	Gold PVD	288
720	Nickel PVD	308	716	Gold Br. PVD	341
706	Black Metal PVD	288	845	Dark Bronze	308
707	Black Metal Br. PVD	308	187	Aged Bronze	308
030	Copper PVD	288	713	Antique Brass	308
708	Copper Br. PVD	308	279	Matte White	259
735	Warm Bronze PVD	288			

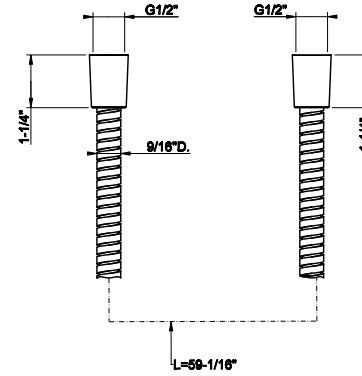

ANELLO
ACCESSOIRES

63701

Wall-mounted soap dish, white



031	Chrome	538	708	Copper Br. PVD	851
149	Finox Br. Nickel	727	735	Warm Bronze PVD	797
299	Matte Black	727	726	Warm Bronze Br. PVD	851
720	Nickel PVD	797	710	Brass PVD	797
706	Black Metal PVD	797	727	Brass Br. PVD	851
707	Black Metal Br. PVD	851	187	Aged Bronze	851
030	Copper PVD	797	713	Antique Brass	851

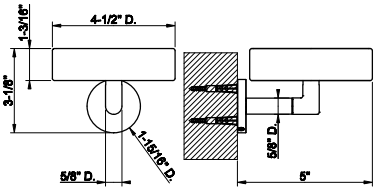

63702

Wall-mounted soap dish, black



031	Chrome	538	708	Copper Br. PVD	851
149	Finox Br. Nickel	727	735	Warm Bronze PVD	797
299	Matte Black	727	726	Warm Bronze Br. PVD	851
720	Nickel PVD	797	710	Brass PVD	797
706	Black Metal PVD	797	727	Brass Br. PVD	851
707	Black Metal Br. PVD	851	187	Aged Bronze	851
030	Copper PVD	797	713	Antique Brass	851

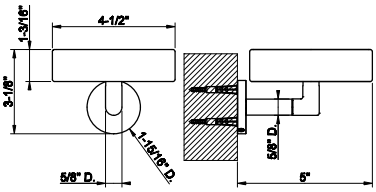

63707

Wall-mounted holder, white



031	Chrome	605	708	Copper Br. PVD	956
149	Finox Br. Nickel	819	735	Warm Bronze PVD	896
299	Matte Black	819	726	Warm Bronze Br. PVD	956
720	Nickel PVD	896	710	Brass PVD	896
706	Black Metal PVD	896	727	Brass Br. PVD	956
707	Black Metal Br. PVD	956	187	Aged Bronze	956
030	Copper PVD	896	713	Antique Brass	956

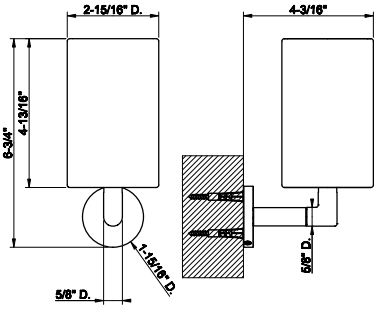

63708

Wall-mounted holder, black



031	Chrome	605	708	Copper Br. PVD	956
149	Finox Br. Nickel	819	735	Warm Bronze PVD	896
299	Matte Black	819	726	Warm Bronze Br. PVD	956
720	Nickel PVD	896	710	Brass PVD	896
706	Black Metal PVD	896	727	Brass Br. PVD	956
707	Black Metal Br. PVD	956	187	Aged Bronze	956
030	Copper PVD	896	713	Antique Brass	956

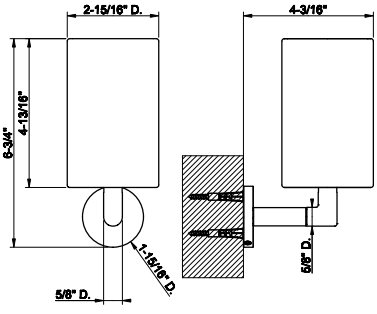

ANELLO ACCESSORIES

63713

Wall-mounted liquid soap dispenser , white

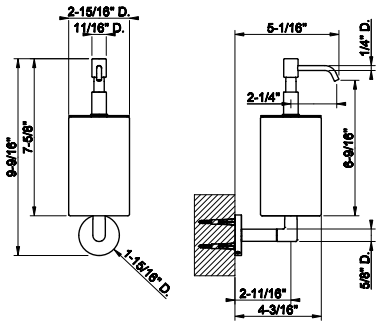

031	Chrome	838	708	Copper Br. PVD	1.323
149	Finox Br. Nickel	1.132	735	Warm Bronze PVD	1.238
299	Matte Black	1.132	726	Warm Bronze Br. PVD	1.323
720	Nickel PVD	1.238	710	Brass PVD	1.238
706	Black Metal PVD	1.238	727	Brass Br. PVD	1.323
707	Black Metal Br. PVD	1.323	187	Aged Bronze	1.323
030	Copper PVD	1.238	713	Antique Brass	1.323



63714

Wall-mounted liquid soap dispenser - black

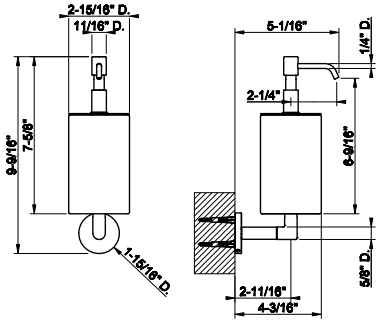

031	Chrome	838	708	Copper Br. PVD	1.323
149	Finox Br. Nickel	1.132	735	Warm Bronze PVD	1.238
299	Matte Black	1.132	726	Warm Bronze Br. PVD	1.323
720	Nickel PVD	1.238	710	Brass PVD	1.238
706	Black Metal PVD	1.238	727	Brass Br. PVD	1.323
707	Black Metal Br. PVD	1.323	187	Aged Bronze	1.323
030	Copper PVD	1.238	713	Antique Brass	1.323



63719

Wall-mounted brush holder, white

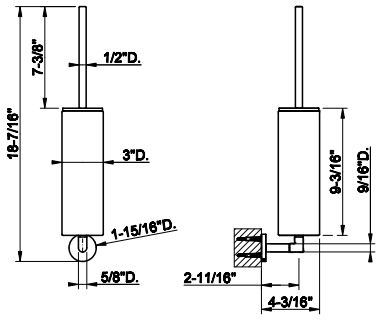

031	Chrome	824	708	Copper Br. PVD	1.301
149	Finox Br. Nickel	1.111	735	Warm Bronze PVD	1.222
299	Matte Black	1.111	726	Warm Bronze Br. PVD	1.301
720	Nickel PVD	1.222	710	Brass PVD	1.222
706	Black Metal PVD	1.222	727	Brass Br. PVD	1.301
707	Black Metal Br. PVD	1.301	187	Aged Bronze	1.301
030	Copper PVD	1.222	713	Antique Brass	1.301



63720

Wall-mounted brush holder, black

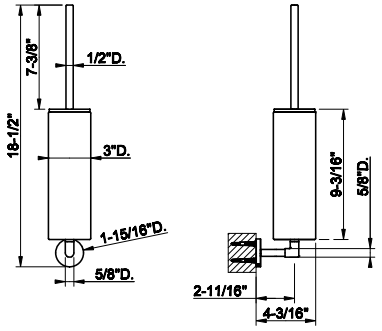

031	Chrome	824	708	Copper Br. PVD	1.301
149	Finox Br. Nickel	1.111	735	Warm Bronze PVD	1.222
299	Matte Black	1.111	726	Warm Bronze Br. PVD	1.301
720	Nickel PVD	1.222	710	Brass PVD	1.222
706	Black Metal PVD	1.222	727	Brass Br. PVD	1.301
707	Black Metal Br. PVD	1.301	187	Aged Bronze	1.301
030	Copper PVD	1.222	713	Antique Brass	1.301



58525

Standing soap holder, white



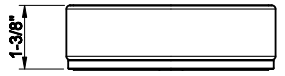

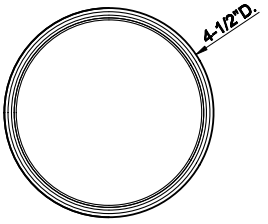

031	Chrome	391	726	Warm Bronze Br. PVD	618
149	Finox Br. Nickel	528	710	Brass PVD	580
299	Matte Black	528	727	Brass Br. PVD	618
720	Nickel PVD	580	246	Gold PVD	658
706	Black Metal PVD	580	716	Gold Br. PVD	658
707	Black Metal Br. PVD	618	845	Dark Bronze	618
030	Copper PVD	580	187	Aged Bronze	618
708	Copper Br. PVD	618	713	Antique Brass	618
735	Warm Bronze PVD	580	279	Matte White	528

58526

Standing soap holder, black





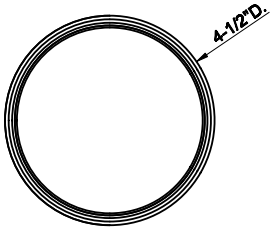

031	Chrome	391	726	Warm Bronze Br. PVD	618
149	Finox Br. Nickel	528	710	Brass PVD	580
299	Matte Black	528	727	Brass Br. PVD	618
720	Nickel PVD	580	246	Gold PVD	658
706	Black Metal PVD	580	716	Gold Br. PVD	658
707	Black Metal Br. PVD	618	845	Dark Bronze	618
030	Copper PVD	580	187	Aged Bronze	618
708	Copper Br. PVD	618	713	Antique Brass	618
735	Warm Bronze PVD	580	279	Matte White	528

58531

Standing tumbler holder, white



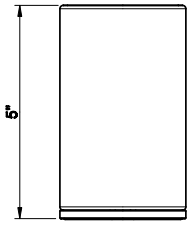

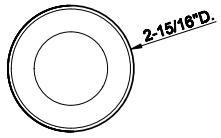

031	Chrome	436	726	Warm Bronze Br. PVD	689
149	Finox Br. Nickel	590	710	Brass PVD	647
299	Matte Black	590	727	Brass Br. PVD	689
720	Nickel PVD	647	246	Gold PVD	733
706	Black Metal PVD	647	716	Gold Br. PVD	733
707	Black Metal Br. PVD	689	845	Dark Bronze	689
030	Copper PVD	647	187	Aged Bronze	689
708	Copper Br. PVD	689	713	Antique Brass	689
735	Warm Bronze PVD	647	279	Matte White	590

58532

Standing tumbler holder, black



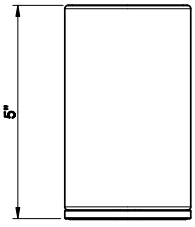

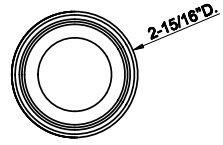

031	Chrome	436	726	Warm Bronze Br. PVD	689
149	Finox Br. Nickel	590	710	Brass PVD	647
299	Matte Black	590	727	Brass Br. PVD	689
720	Nickel PVD	647	246	Gold PVD	733
706	Black Metal PVD	647	716	Gold Br. PVD	733
707	Black Metal Br. PVD	689	845	Dark Bronze	689
030	Copper PVD	647	187	Aged Bronze	689
708	Copper Br. PVD	689	713	Antique Brass	689
735	Warm Bronze PVD	647	279	Matte White	590

ANELLO ACCESSORIES

66437

Standing soap dispenser holder, white

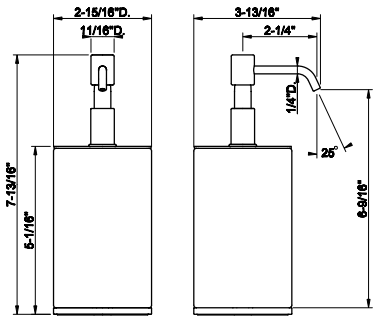



031	Chrome	726	726	Warm Bronze Br. PVD	1.148
149	Finox Br. Nickel	980	710	Brass PVD	1.076
299	Matte Black	980	727	Brass Br. PVD	1.148
720	Nickel PVD	1.076	246	Gold PVD	1.221
706	Black Metal PVD	1.076	716	Gold Br. PVD	1.221
707	Black Metal Br. PVD	1.148	845	Dark Bronze	1.148
030	Copper PVD	1.076	187	Aged Bronze	1.148
708	Copper Br. PVD	1.148	713	Antique Brass	1.148
735	Warm Bronze PVD	1.076	279	Matte White	980

66438

Standing soap dispenser holder, black

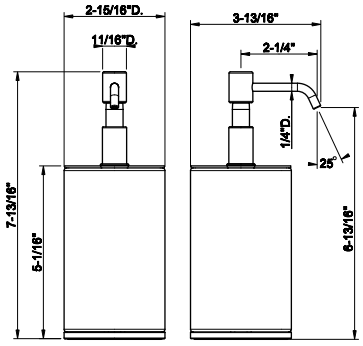



031	Chrome	726	726	Warm Bronze Br. PVD	1.148
149	Finox Br. Nickel	980	710	Brass PVD	1.076
299	Matte Black	980	727	Brass Br. PVD	1.148
720	Nickel PVD	1.076	246	Gold PVD	1.221
706	Black Metal PVD	1.076	716	Gold Br. PVD	1.221
707	Black Metal Br. PVD	1.148	845	Dark Bronze	1.148
030	Copper PVD	1.076	187	Aged Bronze	1.148
708	Copper Br. PVD	1.148	713	Antique Brass	1.148
735	Warm Bronze PVD	1.076	279	Matte White	980

63743

Standing brush holder, white

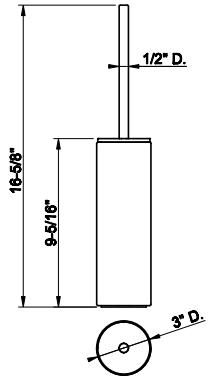



031	Chrome	595	726	Warm Bronze Br. PVD	939
149	Finox Br. Nickel	802	710	Brass PVD	883
299	Matte Black	802	727	Brass Br. PVD	939
720	Nickel PVD	883	246	Gold PVD	1.000
706	Black Metal PVD	883	716	Gold Br. PVD	1.000
707	Black Metal Br. PVD	939	845	Dark Bronze	939
030	Copper PVD	883	187	Aged Bronze	939
708	Copper Br. PVD	939	713	Antique Brass	939
735	Warm Bronze PVD	883	279	Matte White	802

63744

Standing brush holder, black

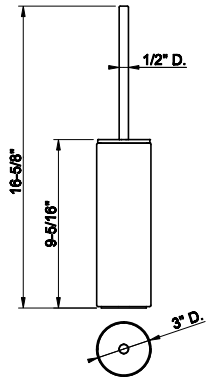



031	Chrome	595	726	Warm Bronze Br. PVD	939
149	Finox Br. Nickel	802	710	Brass PVD	883
299	Matte Black	802	727	Brass Br. PVD	939
720	Nickel PVD	883	246	Gold PVD	1.000
706	Black Metal PVD	883	716	Gold Br. PVD	1.000
707	Black Metal Br. PVD	939	845	Dark Bronze	939
030	Copper PVD	883	187	Aged Bronze	939
708	Copper Br. PVD	939	713	Antique Brass	939
735	Warm Bronze PVD	883	279	Matte White	802

63755

Wall-mounted tissue holder. Vertical or horizontal application



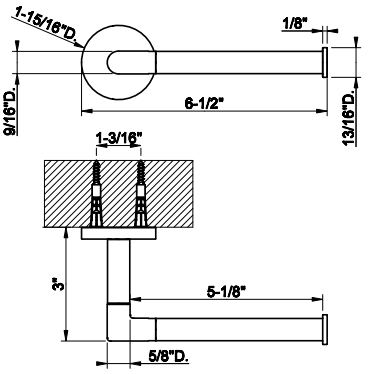

031	Chrome	371	708	Copper Br. PVD	588
149	Finox Br. Nickel	500	735	Warm Bronze PVD	550
299	Matte Black	500	726	Warm Bronze Br. PVD	588
720	Nickel PVD	550	710	Brass PVD	550
706	Black Metal PVD	550	727	Brass Br. PVD	588
707	Black Metal Br. PVD	588	187	Aged Bronze	588
030	Copper PVD	550	713	Antique Brass	588

63797

Wall-mounted 12” towel bar



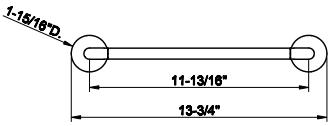

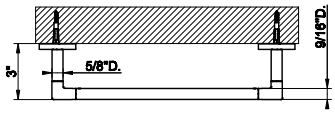

031	Chrome	625	708	Copper Br. PVD	986
149	Finox Br. Nickel	842	735	Warm Bronze PVD	925
299	Matte Black	842	726	Warm Bronze Br. PVD	986
720	Nickel PVD	925	710	Brass PVD	925
706	Black Metal PVD	925	727	Brass Br. PVD	986
707	Black Metal Br. PVD	986	187	Aged Bronze	986
030	Copper PVD	925	713	Antique Brass	986

63800

Wall-mounted 18” towel bar



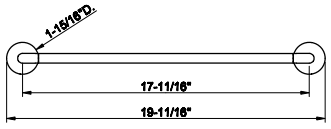

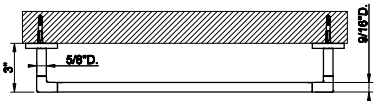

031	Chrome	644	708	Copper Br. PVD	1.019
149	Finox Br. Nickel	869	735	Warm Bronze PVD	954
299	Matte Black	869	726	Warm Bronze Br. PVD	1.019
720	Nickel PVD	954	710	Brass PVD	954
706	Black Metal PVD	954	727	Brass Br. PVD	1.019
707	Black Metal Br. PVD	1.019	187	Aged Bronze	1.019
030	Copper PVD	954	713	Antique Brass	1.019

63803

Wall-mounted 24” towel bar



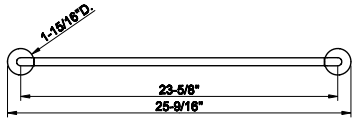

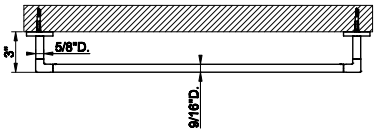

031	Chrome	657	708	Copper Br. PVD	1.035
149	Finox Br. Nickel	889	735	Warm Bronze PVD	972
299	Matte Black	889	726	Warm Bronze Br. PVD	1.035
720	Nickel PVD	972	710	Brass PVD	972
706	Black Metal PVD	972	727	Brass Br. PVD	1.035
707	Black Metal Br. PVD	1.035	187	Aged Bronze	1.035
030	Copper PVD	972	713	Antique Brass	1.035

ANELLO ACCESSORIES

63809

Towel ring

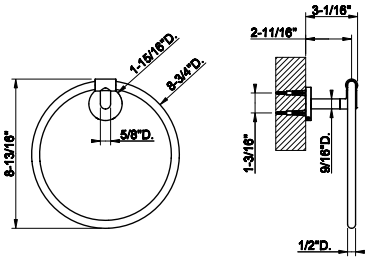



031	Chrome	570	708	Copper Br. PVD	902
149	Finox Br. Nickel	770	735	Warm Bronze PVD	847
299	Matte Black	770	726	Warm Bronze Br. PVD	902
720	Nickel PVD	847	710	Brass PVD	847
706	Black Metal PVD	847	727	Brass Br. PVD	902
707	Black Metal Br. PVD	902	187	Aged Bronze	902
030	Copper PVD	847	713	Antique Brass	902

63721

Wall-mounted garment hook

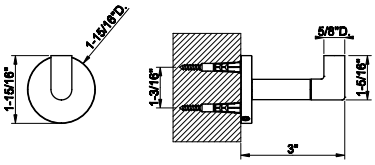



031	Chrome	236	708	Copper Br. PVD	375
149	Finox Br. Nickel	320	735	Warm Bronze PVD	351
299	Matte Black	320	726	Warm Bronze Br. PVD	375
720	Nickel PVD	351	710	Brass PVD	351
706	Black Metal PVD	351	727	Brass Br. PVD	375
707	Black Metal Br. PVD	375	187	Aged Bronze	375
030	Copper PVD	351	713	Antique Brass	375

63824

Towel rail for glass fixing - 12" length

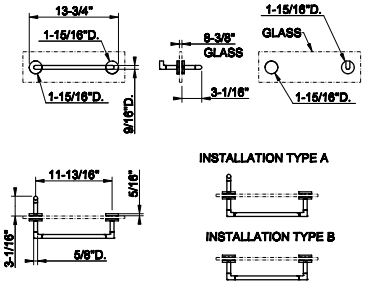



031	Chrome	1.039	708	Copper Br. PVD	1.643
149	Finox Br. Nickel	1.402	735	Warm Bronze PVD	1.537
299	Matte Black	1.402	726	Warm Bronze Br. PVD	1.643
720	Nickel PVD	1.537	710	Brass PVD	1.537
706	Black Metal PVD	1.537	727	Brass Br. PVD	1.643
707	Black Metal Br. PVD	1.643	187	Aged Bronze	1.643
030	Copper PVD	1.537	713	Antique Brass	1.643

63826

Towel rail for glass fixing - 18" length

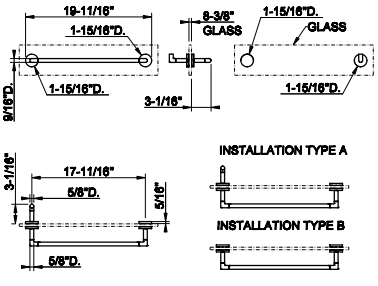



031	Chrome	1.056	708	Copper Br. PVD	1.668
149	Finox Br. Nickel	1.425	735	Warm Bronze PVD	1.562
299	Matte Black	1.425	726	Warm Bronze Br. PVD	1.668
720	Nickel PVD	1.562	710	Brass PVD	1.562
706	Black Metal PVD	1.562	727	Brass Br. PVD	1.668
707	Black Metal Br. PVD	1.668	187	Aged Bronze	1.668
030	Copper PVD	1.562	713	Antique Brass	1.668

63828

Towel rail for glass fixing - 24” length



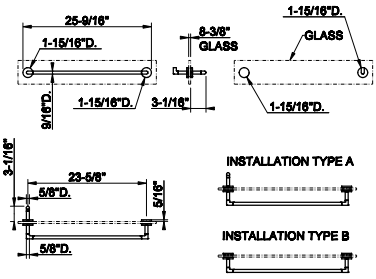

031	Chrome	1.069	708	Copper Br. PVD	1.690
149	Finox Br. Nickel	1.443	735	Warm Bronze PVD	1.583
299	Matte Black	1.443	726	Warm Bronze Br. PVD	1.690
720	Nickel PVD	1.583	710	Brass PVD	1.583
706	Black Metal PVD	1.583	727	Brass Br. PVD	1.690
707	Black Metal Br. PVD	1.690	187	Aged Bronze	1.690
030	Copper PVD	1.583	713	Antique Brass	1.690

58424

Safety grip-handle for bathtub and shower enclosure
• 18” length



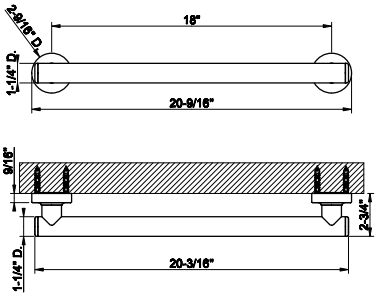

031	Chrome	1.932	726	Warm Bronze Br. PVD	3.054
149	Finox Br. Nickel	2.611	710	Brass PVD	2.862
299	Matte Black	2.611	727	Brass Br. PVD	3.056
720	Nickel PVD	2.862	246	Gold PVD	3.243
706	Black Metal PVD	2.862	716	Gold Br. PVD	3.243
707	Black Metal Br. PVD	3.056	845	Dark Bronze	3.056
030	Copper PVD	2.862	187	Aged Bronze	3.056
708	Copper Br. PVD	3.056	713	Antique Brass	3.056
735	Warm Bronze PVD	2.862	279	Matte White	2.611

58430

Safety grip-handle for bathtub and shower enclosure
• 24” length



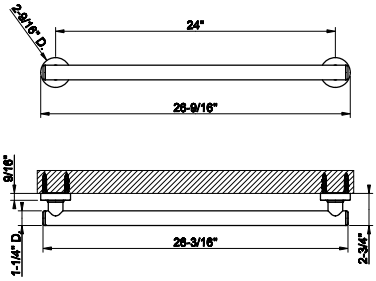

031	Chrome	1.967	726	Warm Bronze Br. PVD	3.108
149	Finox Br. Nickel	2.656	710	Brass PVD	2.911
299	Matte Black	2.656	727	Brass Br. PVD	3.108
720	Nickel PVD	2.911	246	Gold PVD	3.304
706	Black Metal PVD	2.911	716	Gold Br. PVD	3.304
707	Black Metal Br. PVD	3.108	845	Dark Bronze	3.108
030	Copper PVD	2.911	187	Aged Bronze	3.108
708	Copper Br. PVD	3.108	713	Antique Brass	3.108
735	Warm Bronze PVD	2.911	279	Matte White	2.656

58432

Safety grip-handle for bathtub and shower enclosure
• 36” length



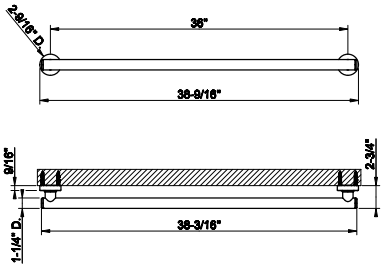

031	Chrome	2.165	726	Warm Bronze Br. PVD	3.419
149	Finox Br. Nickel	2.921	710	Brass PVD	3.203
299	Matte Black	2.921	727	Brass Br. PVD	3.419
720	Nickel PVD	3.203	246	Gold PVD	3.637
706	Black Metal PVD	3.203	716	Gold Br. PVD	3.637
707	Black Metal Br. PVD	3.419	845	Dark Bronze	3.419
030	Copper PVD	3.203	187	Aged Bronze	3.419
708	Copper Br. PVD	3.419	713	Antique Brass	3.419
735	Warm Bronze PVD	3.203	279	Matte White	2.921

ANELLO ACCESSORIES

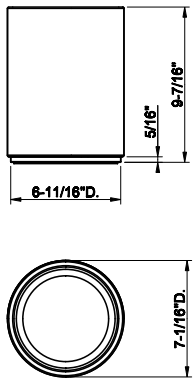

45590

White waste-paper basket



031	Chrome	1.056	726	Warm Bronze Br. PVD	1.663
149	Finox Br. Nickel	1.369	710	Brass PVD	1.559
299	Matte Black	1.316	727	Brass Br. PVD	1.663
720	Nickel PVD	1.559	246	Gold PVD	1.775
706	Black Metal PVD	1.559	716	Gold Br. PVD	1.775
707	Black Metal Br. PVD	1.663	845	Dark Bronze	1.663
030	Copper PVD	1.559	187	Aged Bronze	1.663
708	Copper Br. PVD	1.663	713	Antique Brass	1.663
735	Warm Bronze PVD	1.559	279	Matte White	1.316


GESSI
ANELLO
TOTAL LOOK

54623



Flush Actuator Plate ANELLO
•Compatible with GEBERIT models: 111.597.001, 111.902.005, 111.798.00.1, 111.335.00.5
•Without visible fixing system
•ADA COMPLIANT

031	Chrome	1.285	708	Copper Br. PVD	2.028
149	Finox Br. Nickel	1.732	735	Warm Bronze PVD	1.903
299	Matte Black	1.820	726	Warm Bronze Br. PVD	2.028
720	Nickel PVD	1.903	710	Brass PVD	1.903
706	Black Metal PVD	1.903	727	Brass Br. PVD	2.028
707	Black Metal Br. PVD	2.028	187	Aged Bronze	2.028
030	Copper PVD	1.903	713	Antique Brass	2.028

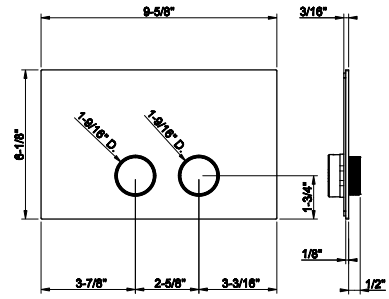

54601



Counter washbasin In stainless steel, without overflow waste. Without basin waste. It can be combined with waste 54597.

239	Steel Br.	2.449	708	Copper Br. PVD	6.986
299	Matte Black	4.431	726	Warm Bronze Br. PVD	6.986
707	Black Metal Br. PVD	6.986	727	Brass Br. PVD	6.986

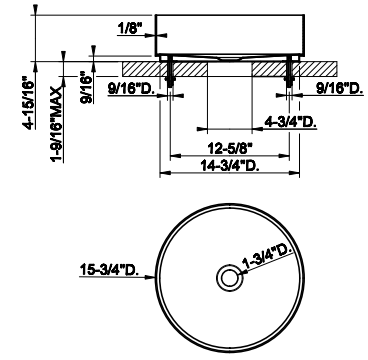

01578



Undermounted washbasin brackets for 54601, 54605, 54606.

031	Chrome	428

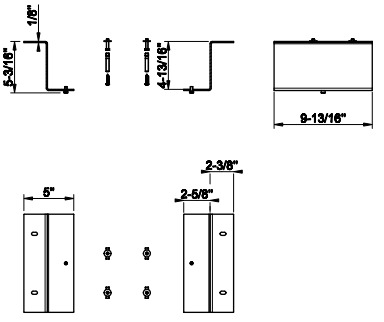

54597



1 1/4" push drain with or without overflow feature
- Recommended for Gessi 316 Collection

239	Steel Br.	212	708	Copper Br. PVD	313
299	Matte Black	287	726	Warm Bronze Br. PVD	313
707	Black Metal Br. PVD	313	727	Brass Br. PVD	313

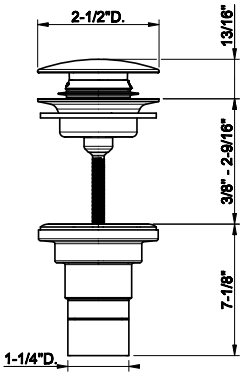

ANELLO TOTAL LOOK

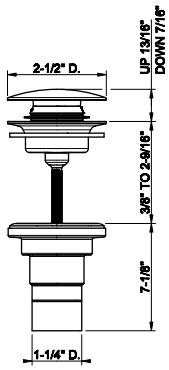

01427

1 1/4" push drain with or without overflow feature



031	Chrome	134	030	Copper PVD	379
239	Steel Br.	134	708	Copper Br. PVD	379
275	Matte Cipria	326	735	Warm Bronze PVD	379
273	Matte Greige	326	726	Warm Bronze Br. PVD	379
277	Glossy Ocra	326	710	Brass PVD	379
278	Glossy Coral	326	727	Brass Br. PVD	379
276	Matte Agave	326	246	Gold PVD	405
299	Matte Black	386	716	Gold Br. PVD	405
720	Nickel PVD	379	187	Aged Bronze	379
706	Black Metal PVD	379	713	Antique Brass	379
707	Black Metal Br. PVD	379	845	Dark Bronze	379



INGRANAGGIO

63501



Single lever washbasin mixer with pop-up assembly
- Spout projection 5”
- Height 6-15/16”
- 1-1/4” D. pop-up drain and flexible hoses with 9/16” – 24 UNEF connections.
- Max flow rate 1.2 GPM
- ADA compliant

031	Chrome	949	708	Copper Br. PVD	1.498
149	Finox Br. Nickel	1.278	735	Warm Bronze PVD	1.402
299	Matte Black	1.278	726	Warm Bronze Br. PVD	1.498
720	Nickel PVD	1.402	710	Brass PVD	1.402
706	Black Metal PVD	1.402	727	Brass Br. PVD	1.498
707	Black Metal Br. PVD	1.498	187	Aged Bronze	1.498
030	Copper PVD	1.402	713	Antique Brass	1.498

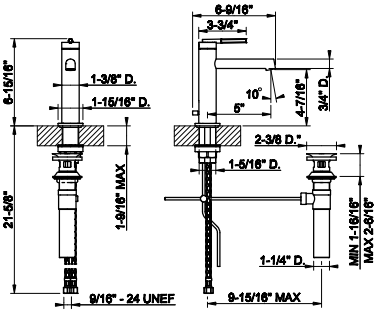

63502



Single lever washbasin mixer without pop-up assembly
- Spout projection 5”
- Height 6-15/16”
- Drain not included - See DRAINS section
- Max flow rate 1.2 GPM
- ADA compliant

031	Chrome	855	708	Copper Br. PVD	1.348
149	Finox Br. Nickel	1.154	735	Warm Bronze PVD	1.263
299	Matte Black	1.154	726	Warm Bronze Br. PVD	1.348
720	Nickel PVD	1.263	710	Brass PVD	1.263
706	Black Metal PVD	1.263	727	Brass Br. PVD	1.348
707	Black Metal Br. PVD	1.348	187	Aged Bronze	1.348
030	Copper PVD	1.263	713	Antique Brass	1.348

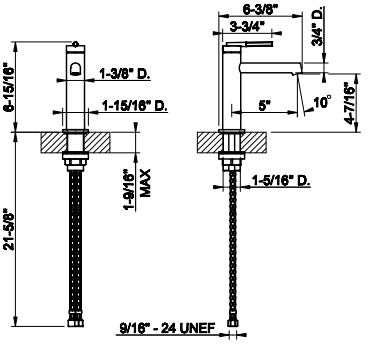

63504



Tall single lever washbasin mixer without pop-up assembly
- Spout projection 5”
- Height 12-13/16”
- Drain not included - See DRAINS section
- Max flow rate 1.2 GPM
- ADA compliant

031	Chrome	1.107	708	Copper Br. PVD	1.746
149	Finox Br. Nickel	1.494	735	Warm Bronze PVD	1.638
299	Matte Black	1.494	726	Warm Bronze Br. PVD	1.746
720	Nickel PVD	1.638	710	Brass PVD	1.638
706	Black Metal PVD	1.638	727	Brass Br. PVD	1.746
707	Black Metal Br. PVD	1.746	187	Aged Bronze	1.746
030	Copper PVD	1.638	713	Antique Brass	1.746

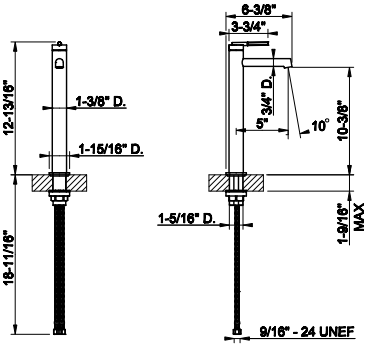

63506



Tall single lever washbasin mixer without pop-up assembly
- Spout projection 6-7/8””
- Height 12-13/16”
- Drain not included - See DRAINS section
- Max flow rate 1.2 GPM
- ADA compliant

031	Chrome	1.137	708	Copper Br. PVD	1.798
149	Finox Br. Nickel	1.535	735	Warm Bronze PVD	1.683
299	Matte Black	1.535	726	Warm Bronze Br. PVD	1.798
720	Nickel PVD	1.683	710	Brass PVD	1.683
706	Black Metal PVD	1.683	727	Brass Br. PVD	1.798
707	Black Metal Br. PVD	1.798	187	Aged Bronze	1.798
030	Copper PVD	1.683	713	Antique Brass	1.798

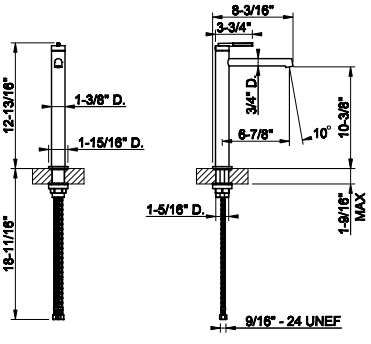

INGRANAGGIO

63515

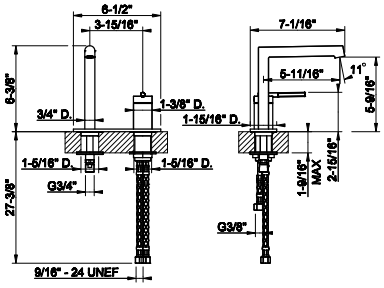

Deck-mounted washbasin mixer with separate control without pop-up assembly
- Spout projection 5-11/16”
- Height 6-3/8”
- Drain notincluded - See DRAINS section
- Max flow rate 1.2 GPM
- ADA compliant

031	Chrome	1.308	708	Copper Br. PVD	2.068
149	Finox Br. Nickel	1.767	735	Warm Bronze PVD	1.937
299	Matte Black	1.767	726	Warm Bronze Br. PVD	2.068
720	Nickel PVD	1.937	710	Brass PVD	1.937
706	Black Metal PVD	1.937	727	Brass Br. PVD	2.068
707	Black Metal Br. PVD	2.068	187	Aged Bronze	2.068
030	Copper PVD	1.937	713	Antique Brass	2.068



63551

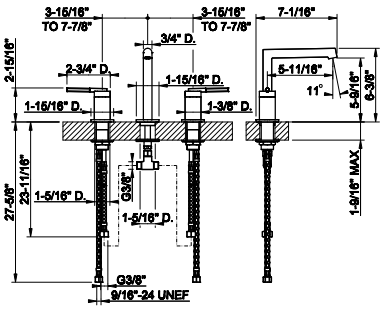

Widespread washbasin mixer without pop-up assembly
- Spout projection 5-11/16”
- Height 6-3/8”
- Drain not included - See DRAINSsection
- Max flow rate 1.2 GPM
- ADA compliant

031	Chrome	1.998	708	Copper Br. PVD	3.157
149	Finox Br. Nickel	2.698	735	Warm Bronze PVD	2.957
299	Matte Black	2.698	726	Warm Bronze Br. PVD	3.157
720	Nickel PVD	2.957	710	Brass PVD	2.957
706	Black Metal PVD	2.957	727	Brass Br. PVD	3.157
707	Black Metal Br. PVD	3.157	187	Aged Bronze	3.157
030	Copper PVD	2.957	713	Antique Brass	3.157



63553

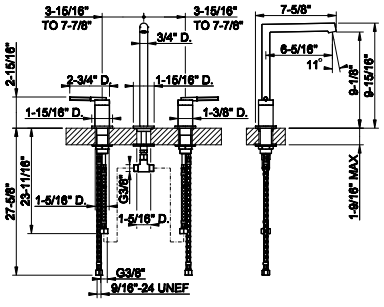

Widespread washbasin mixer without pop-up assembly
- Spout projection 5-11/16”
- Height 9-15/16”
- Drain not included - See DRAINS section
- Max flow rate 1.2 GPM
- ADA compliant

031	Chrome	1.998	708	Copper Br. PVD	3.157
149	Finox Br. Nickel	2.698	735	Warm Bronze PVD	2.957
299	Matte Black	2.698	726	Warm Bronze Br. PVD	3.157
720	Nickel PVD	2.957	710	Brass PVD	2.957
706	Black Metal PVD	2.957	727	Brass Br. PVD	3.157
707	Black Metal Br. PVD	3.157	187	Aged Bronze	3.157
030	Copper PVD	2.957	713	Antique Brass	3.157



63321

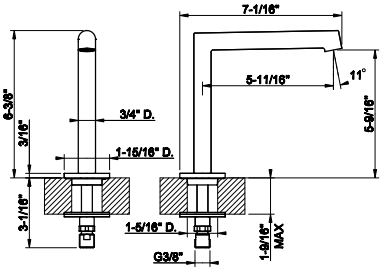

Deck-mounted washbasin spout only without pop-up assembly
- Spout projection 5-11/16”
- Height 6-3/8”
- 1/2” connections
- Drain not included - See DRAINS section
- Requires handle kit
- Max flow rate 1.2 GPM

031	Chrome	529	708	Copper Br. PVD	838
149	Finox Br. Nickel	718	735	Warm Bronze PVD	787
299	Matte Black	718	726	Warm Bronze Br. PVD	838
720	Nickel PVD	787	710	Brass PVD	787
706	Black Metal PVD	787	727	Brass Br. PVD	838
707	Black Metal Br. PVD	838	187	Aged Bronze	838
030	Copper PVD	787	713	Antique Brass	838



63323



Deck-mounted washbasin spout only without pop-up assembly
- Spout projection 6-5/16”
- Height 9-15/16”
- 1/2” connections
- Drainnot included - See DRAINS section
- Requires handle kit
- Max flow rate 1.2 GPM

031	Chrome	593	708	Copper Br. PVD	937
149	Finox Br. Nickel	800	735	Warm Bronze PVD	878
299	Matte Black	800	726	Warm Bronze Br. PVD	937
720	Nickel PVD	878	710	Brass PVD	878
706	Black Metal PVD	878	727	Brass Br. PVD	937
707	Black Metal Br. PVD	937	187	Aged Bronze	937
030	Copper PVD	878	713	Antique Brass	937

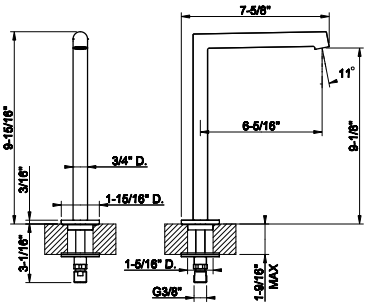

63600



Deck-mounted washbasin mixer control
- Drain not included - See DRAINS section
- ADA compliant

031	Chrome	730	708	Copper Br. PVD	1.154
149	Finox Br. Nickel	986	735	Warm Bronze PVD	1.078
299	Matte Black	986	726	Warm Bronze Br. PVD	1.154
720	Nickel PVD	1.078	710	Brass PVD	1.078
706	Black Metal PVD	1.078	727	Brass Br. PVD	1.154
707	Black Metal Br. PVD	1.154	187	Aged Bronze	1.154
030	Copper PVD	1.078	713	Antique Brass	1.154

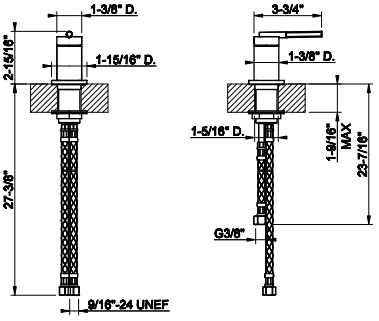

63397

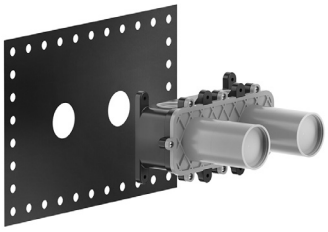

Wall-mounted washbasin mixer rough valve
- Drain not included - See DRAINS section

239	Steel Br.	900

63397+63588

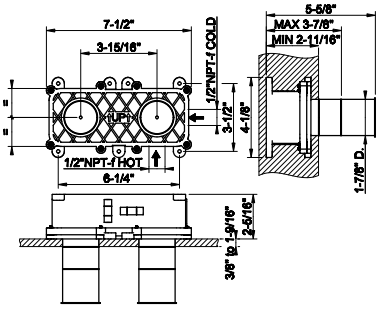

63588



TRIMS PARTS ONLY wall-mounted washbasin mixer trim, without waste
- Single backplate
- Spout projection 5-1/8” - 6-5/16”
- Drainnot included - See DRAINS section
- Requires in-wall rough valve 63397
- Max flow rate 1.2 GPM
- ADA Compliant

031	Chrome	992	708	Copper Br. PVD	1.564
149	Finox Br. Nickel	1.339	735	Warm Bronze PVD	1.468
299	Matte Black	1.339	726	Warm Bronze Br. PVD	1.564
720	Nickel PVD	1.468	710	Brass PVD	1.468
706	Black Metal PVD	1.468	727	Brass Br. PVD	1.564
707	Black Metal Br. PVD	1.564	187	Aged Bronze	1.564
030	Copper PVD	1.468	713	Antique Brass	1.564

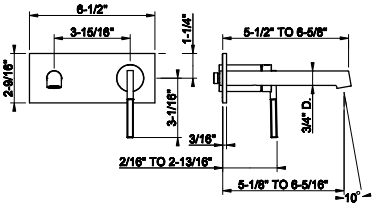

INGRANAGGIO

63397+63581

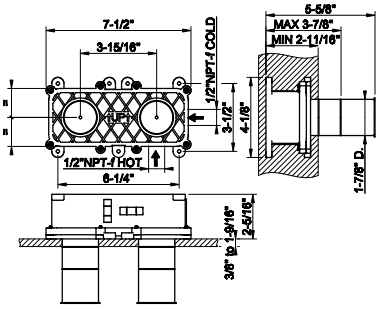

63397

Wall-mounted washbasin mixer rough valve
- Drain not included - See DRAINS section

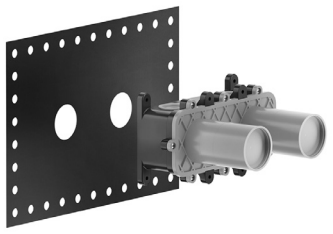

239	Steel Br.	900

63581

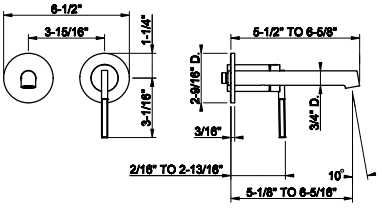

TRIMS PARTS ONLY wall-mounted washbasin mixer trim, without waste
- Separate backplate
- Spout projection 5-1/8" - 6-5/16"
- Drainnot included - See DRAINS section
- Requires in-wall rough valve 63397
- Max flow rate 1.2 GPM
- ADA Compliant



031	Chrome	857	708	Copper Br. PVD	1.353
149	Finox Br. Nickel	1.156	735	Warm Bronze PVD	1.269
299	Matte Black	1.156	726	Warm Bronze Br. PVD	1.353
720	Nickel PVD	1.269	710	Brass PVD	1.269
706	Black Metal PVD	1.269	727	Brass Br. PVD	1.353
707	Black Metal Br. PVD	1.353	187	Aged Bronze	1.353
030	Copper PVD	1.269	713	Antique Brass	1.353

63403

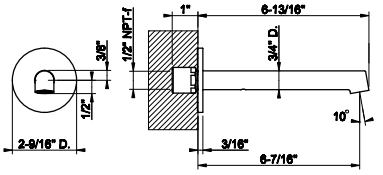

Wall-mounted washbasin spout only
- Projection 6-7/16"
- 1/2" connections
- Drain not included - See DRAINS section
- Requires mixercontrol
- Max flow rate 1.2 GPM



031	Chrome	405	708	Copper Br. PVD	640
149	Finox Br. Nickel	550	735	Warm Bronze PVD	601
299	Matte Black	550	726	Warm Bronze Br. PVD	640
720	Nickel PVD	601	710	Brass PVD	601
706	Black Metal PVD	601	727	Brass Br. PVD	640
707	Black Metal Br. PVD	640	187	Aged Bronze	640
030	Copper PVD	601	713	Antique Brass	640

63404

Long wall-mounted spout basin

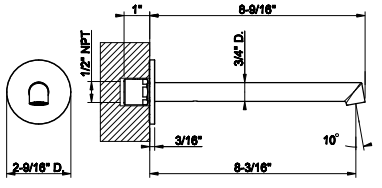



031	Chrome	426	708	Copper Br. PVD	671
149	Finox Br. Nickel	573	735	Warm Bronze PVD	628
299	Matte Black	573	726	Warm Bronze Br. PVD	671
720	Nickel PVD	628	710	Brass PVD	628
706	Black Metal PVD	628	727	Brass Br. PVD	671
707	Black Metal Br. PVD	671	187	Aged Bronze	671
030	Copper PVD	628	713	Antique Brass	671



63399

Ceiling-mounted washbasin spout only
- Spout length 63”
- Drain not included - See DRAINS section
- Requires mixer control
- Maxflow rate 1.2 gpm

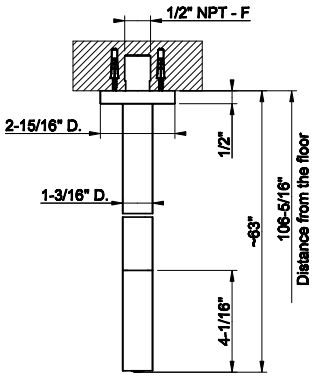

031	Chrome	1.777	030	Copper PVD	2.631
275	Matte Cipria	2.279	708	Copper Br. PVD	2.806
273	Matte Greige	2.279	735	Warm Bronze PVD	2.631
277	Glossy Ocra	2.666	726	Warm Bronze Br. PVD	2.806
278	Glossy Coral	2.666	710	Brass PVD	2.631
276	Matte Agave	2.279	727	Brass Br. PVD	2.806
149	Finox Br. Nickel	2.399	246	Gold PVD	2.986
299	Matte Black	2.399	716	Gold Br. PVD	2.986
720	Nickel PVD	2.631	187	Aged Bronze	2.806
706	Black Metal PVD	2.631	713	Antique Brass	2.806
707	Black Metal Br. PVD	2.806	845	Dark Bronze	2.666



63499

Ceiling-mounted washbasin spout only
- Custom length: Minimum 5-15/16” - Maximum 74-13/16”
- Drain not included - See DRAINS section
- Requires mixer control
- Max flow rate 1.2 gpm

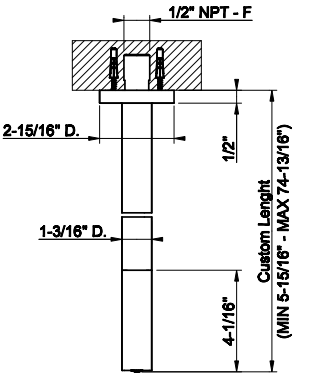

031	Chrome	2.548	030	Copper PVD	3.769
275	Matte Cipria	3.439	708	Copper Br. PVD	4.022
273	Matte Greige	3.439	735	Warm Bronze PVD	3.769
277	Glossy Ocra	3.439	726	Warm Bronze Br. PVD	4.022
278	Glossy Coral	3.439	710	Brass PVD	3.769
276	Matte Agave	3.439	727	Brass Br. PVD	4.022
149	Finox Br. Nickel	3.439	246	Gold PVD	4.281
299	Matte Black	3.439	716	Gold Br. PVD	4.281
720	Nickel PVD	3.769	187	Aged Bronze	4.022
706	Black Metal PVD	3.769	713	Antique Brass	4.022
707	Black Metal Br. PVD	4.022	845	Dark Bronze	4.022

INGRANAGGIO

48189+63528

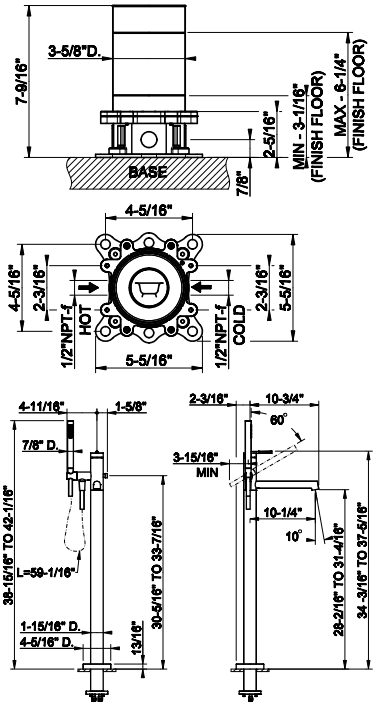

48189

Floor-mounted tub filler in-floor rough valve



031	Chrome	847

63528

TRIM PARTS ONLY floor-mounted tub filler
- Handshower
- 59” flex hose
- diverter
- Spout projection 10-1/4”
- Handshower max flow rate 1.75 GPM
- Spout mixed flow rate 6 GPM at 60 PSI
- Requires in-floor rough valve 48189



031	Chrome	4.063	708	Copper Br. PVD	6.421
149	Finox Br. Nickel	5.485	735	Warm Bronze PVD	6.014
299	Matte Black	5.485	726	Warm Bronze Br. PVD	6.421
720	Nickel PVD	6.014	710	Brass PVD	6.014
706	Black Metal PVD	6.014	727	Brass Br. PVD	6.421
707	Black Metal Br. PVD	6.421	187	Aged Bronze	6.421
030	Copper PVD	6.014	713	Antique Brass	6.421

63603

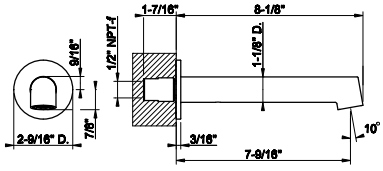

Wall-mounted Bath spout only
- 1/2” connection with separate control (not included)
- Spout projection 7-9/16”
- Drain not included - See DRAINS section
- Requires mixer control
- Flow rate 6.4 GPM at 60 PSI



031	Chrome	469	708	Copper Br. PVD	740
149	Finox Br. Nickel	633	735	Warm Bronze PVD	695
299	Matte Black	633	726	Warm Bronze Br. PVD	740
720	Nickel PVD	695	710	Brass PVD	695
706	Black Metal PVD	695	727	Brass Br. PVD	740
707	Black Metal Br. PVD	740	187	Aged Bronze	740
030	Copper PVD	695	713	Antique Brass	740

54139



Wall-mounted bath mixer control rough valve
- 1/2” connections
- Non positive shut off

239	Steel Br.	1.087

54139+63543

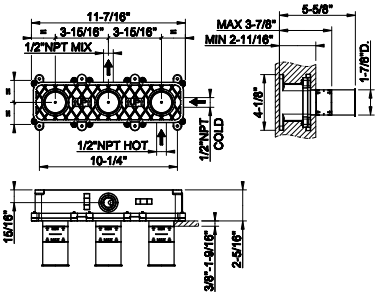

63543



TRIM PARTS ONLY. Wall-mounted bath mixer control
- Single backplate
- Two-way diverter
- Water outlet
- Handshower max flow rate 1.75 GPM
- Requires inline Pressure Balance

031	Chrome	2.005	708	Copper Br. PVD	3.164
149	Finox Br. Nickel	2.708	735	Warm Bronze PVD	2.964
299	Matte Black	2.708	726	Warm Bronze Br. PVD	3.164
720	Nickel PVD	2.964	710	Brass PVD	2.964
706	Black Metal PVD	2.964	727	Brass Br. PVD	3.164
707	Black Metal Br. PVD	3.164	187	Aged Bronze	3.164
030	Copper PVD	2.964	713	Antique Brass	3.164

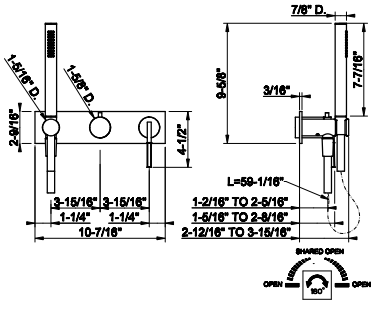

54139



Wall-mounted bath mixer control rough valve
- 1/2” connections
- Non positive shut off

239	Steel Br.	1.087

54139+63545

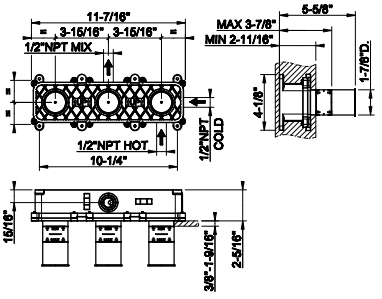

63545



TRIM PARTS ONLY. Wall-mounted bath mixer control
- Separate backplate
- Two-way diverter
- Water outlet
- Handshower max flow rate1.75 GPM
- Requires inline Pressure Balance

031	Chrome	1.827	708	Copper Br. PVD	2.885
149	Finox Br. Nickel	2.466	735	Warm Bronze PVD	2.702
299	Matte Black	2.466	726	Warm Bronze Br. PVD	2.885
720	Nickel PVD	2.702	710	Brass PVD	2.702
706	Black Metal PVD	2.702	727	Brass Br. PVD	2.885
707	Black Metal Br. PVD	2.885	187	Aged Bronze	2.885
030	Copper PVD	2.702	713	Antique Brass	2.885

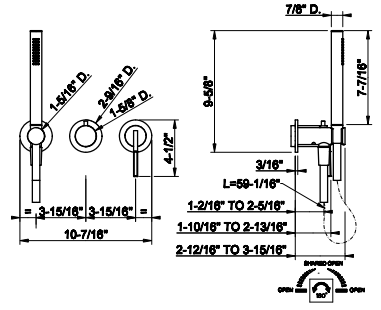

54055+63561

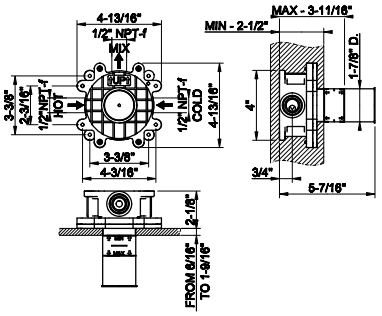

54055

Wall-mounted Basin/bath mixer rough valve. One exit

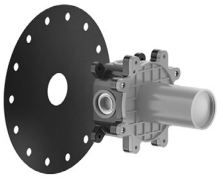

239	Steel Br.	563

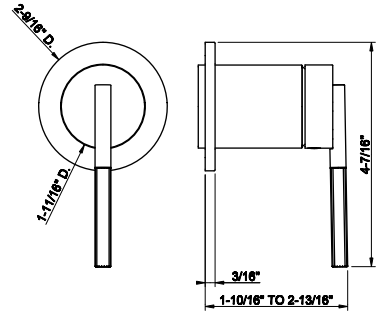

63561

TRIM PARTS ONLY Wall mounted mixer control with Ø35 cartridge
- For basin and bath spouts
- 1/2” connections
- Drain not included- see DRAINS section
- Requires in-wall rough valve 54055
- ADA compliant



031	Chrome	503	708	Copper Br. PVD	795
149	Finox Br. Nickel	682	735	Warm Bronze PVD	747
299	Matte Black	682	726	Warm Bronze Br. PVD	795
720	Nickel PVD	747	710	Brass PVD	747
706	Black Metal PVD	747	727	Brass Br. PVD	795
707	Black Metal Br. PVD	795	187	Aged Bronze	795
030	Copper PVD	747	713	Antique Brass	795

09279+63139

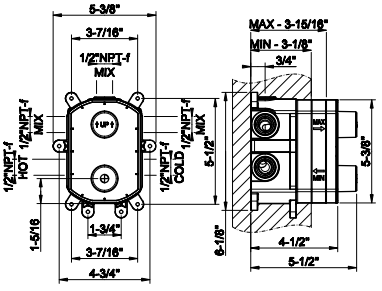

09279

In-wall thermostatic rough valve for 1/2/3-way diverter function
- 1/2” connections
- Vertical application
- Anti-scalding
- Non-Shared function

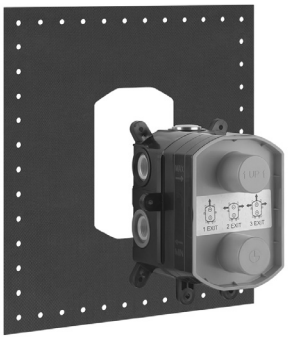

031	Chrome	877

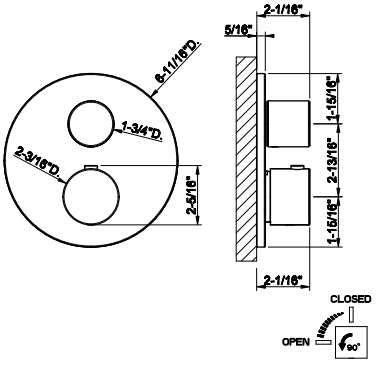

63139

TRIM PARTS ONLY External parts for thermostatic with single volume control RIGATO.
- Single backplate
- 1/2” connections
- Vertical application
- Anti-scalding
- Requires in-wall rough valve 09279



031	Chrome	1.484	708	Copper Br. PVD	2.345
149	Finox Br. Nickel	2.004	735	Warm Bronze PVD	2.197
299	Matte Black	2.004	726	Warm Bronze Br. PVD	2.345
720	Nickel PVD	2.197	710	Brass PVD	2.197
706	Black Metal PVD	2.197	727	Brass Br. PVD	2.345
707	Black Metal Br. PVD	2.345	187	Aged Bronze	2.345
030	Copper PVD	2.197	713	Antique Brass	2.345

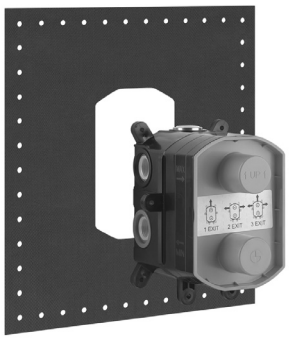

09279

In-wall thermostatic rough valve for 1/2/3-way diverter function
- 1/2” connections
- Vertical application
- Anti-scalding
- Non-Shared function

031	Chrome	877

09279+63141

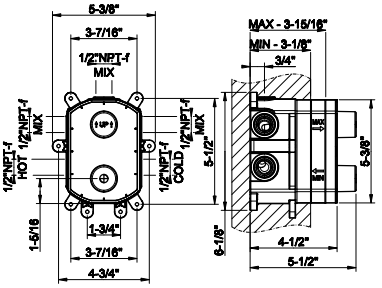



63141

TRIM PARTS ONLY External parts for 2-way diverter thermostatic and volume control RIGATO.
- Single backplate
- 1/2” connections
- Vertical application
- Anti-scalding
- Requires in-wall rough valve 09279

031	Chrome	1.484	708	Copper Br. PVD	2.345
149	Finox Br. Nickel	2.004	735	Warm Bronze PVD	2.197
299	Matte Black	2.004	726	Warm Bronze Br. PVD	2.345
720	Nickel PVD	2.197	710	Brass PVD	2.197
706	Black Metal PVD	2.197	727	Brass Br. PVD	2.345
707	Black Metal Br. PVD	2.345	187	Aged Bronze	2.345
030	Copper PVD	2.197	713	Antique Brass	2.345

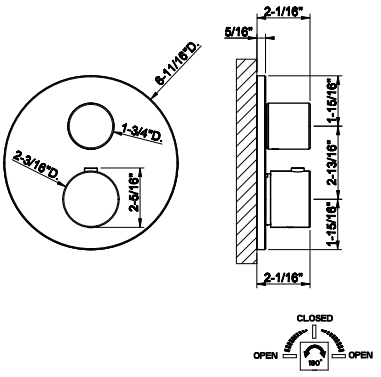

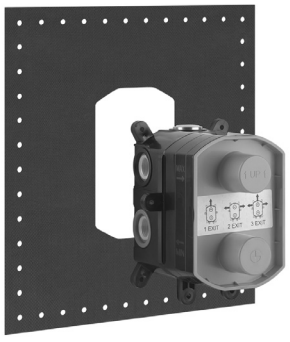

09279

In-wall thermostatic rough valve for 1/2/3-way diverter function
- 1/2” connections
- Vertical application
- Anti-scalding
- Non-Shared function

031	Chrome	877

09279+63143

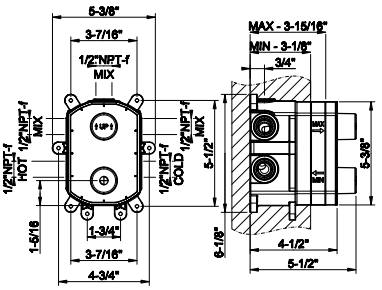



63143

TRIM PARTS ONLY External parts for 3-way diverterthermostatic and volume control RIGATO.
- Single backplate
- 1/2” connections
- Vertical application
- Anti-scalding
- Requires in-wall rough valve 09279

031	Chrome	1.484	708	Copper Br. PVD	2.345
149	Finox Br. Nickel	2.004	735	Warm Bronze PVD	2.197
299	Matte Black	2.004	726	Warm Bronze Br. PVD	2.345
720	Nickel PVD	2.197	710	Brass PVD	2.197
706	Black Metal PVD	2.197	727	Brass Br. PVD	2.345
707	Black Metal Br. PVD	2.345	187	Aged Bronze	2.345
030	Copper PVD	2.197	713	Antique Brass	2.345

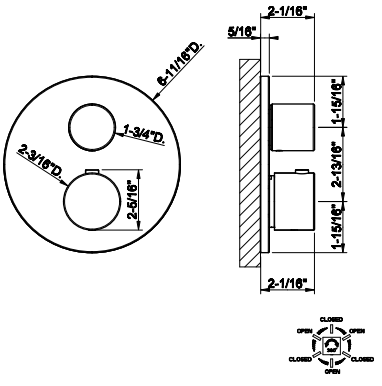

INGRANAGGIO

54169+63331

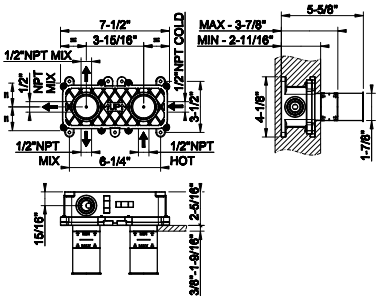

54169

In-wall thermostatic rough valve for 1/2/3-way diverter function
- 1/2” connections
- Anti-scalding
- Service stops not included
- Non-Shared Function

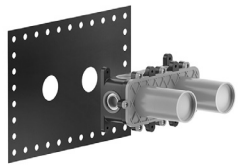

239	Steel Br.	843

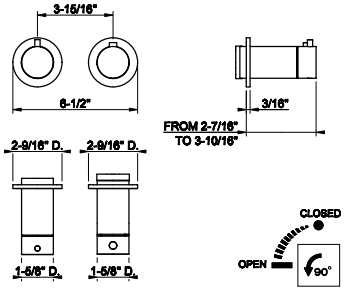

63331

TRIM PARTS ONLY External parts for thermostatic with singlevolume control
- Single backplate
- 1/2” connections
- Anti-scalding
- Requires in-wall rough valve 54169



031	Chrome	1.468	735	Warm Bronze PVD	2.174
149	Finox Br. Nickel	1.982	726	Warm Bronze Br. PVD	2.318
299	Matte Black	1.982	710	Brass PVD	2.174
720	Nickel PVD	2.174	727	Brass Br. PVD	2.318
706	Black Metal PVD	2.174	187	Aged Bronze	2.318
707	Black Metal Br. PVD	2.318	713	Antique Brass	2.318
030	Copper PVD	2.174	845	Dark Bronze	2.318
708	Copper Br. PVD	2.318			

54169+63332

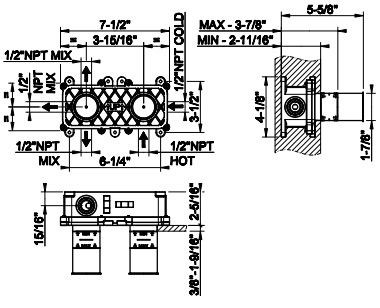

54169

In-wall thermostatic rough valve for 1/2/3-way diverter function
- 1/2” connections
- Anti-scalding
- Service stops not included
- Non-Shared Function

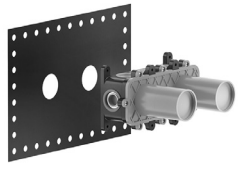

239	Steel Br.	843

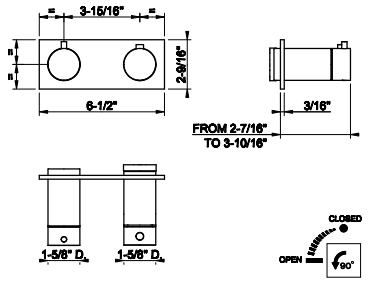

63332

TRIMS PARTS ONLY External parts for thermostatic with single volume control
- Single backplates
- 1/2” connections
- Anti-scalding
- Requires in-wall rough valve 54169



031	Chrome	1.625	735	Warm Bronze PVD	2.403
149	Finox Br. Nickel	2.194	726	Warm Bronze Br. PVD	2.567
299	Matte Black	2.194	710	Brass PVD	2.403
720	Nickel PVD	2.403	727	Brass Br. PVD	2.567
706	Black Metal PVD	2.403	187	Aged Bronze	2.567
707	Black Metal Br. PVD	2.567	713	Antique Brass	2.567
030	Copper PVD	2.403	845	Dark Bronze	2.567
708	Copper Br. PVD	2.567			

54169

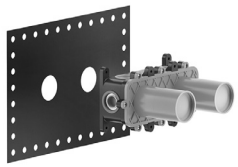

In-wall thermostatic rough valve for 1/2/3-way diverter function
- 1/2” connections
- Anti-scalding
- Service stops not included
- Non-Shared Function

239	Steel Br.	843

54169+63333

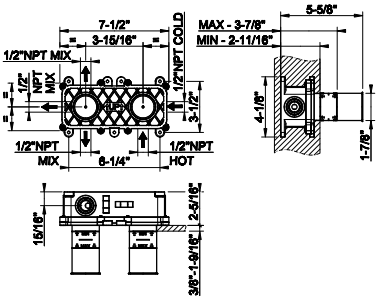

63333



TRIM PARTS ONLY External parts for 2-way diverterthermostatic and volume control
- Single backplate
- 1/2” connections
- Anti-scalding
- Requires in-wall rough valve 54169

031	Chrome	1.468	735	Warm Bronze PVD	2.174
149	Finox Br. Nickel	1.982	726	Warm Bronze Br. PVD	2.318
299	Matte Black	1.982	710	Brass PVD	2.174
720	Nickel PVD	2.174	727	Brass Br. PVD	2.318
706	Black Metal PVD	2.174	187	Aged Bronze	2.318
707	Black Metal Br. PVD	2.318	713	Antique Brass	2.318
030	Copper PVD	2.174	845	Dark Bronze	2.318
708	Copper Br. PVD	2.318			

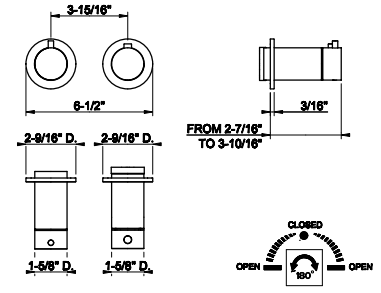

54169

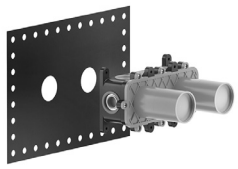

In-wall thermostatic rough valve for 1/2/3-way diverter function
- 1/2” connections
- Anti-scalding
- Service stops not included
- Non-Shared Function

239	Steel Br.	843

54169+63334

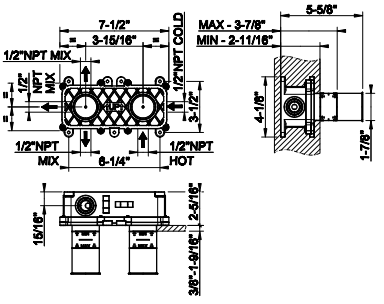

63334



TRIMS PARTS ONLY External parts for 2 -way diverter thermostatic and volume control
- Single backplates
- 1/2” connections
- Anti-scalding
- Requires in-wall rough valve 54169

031	Chrome	1.625	735	Warm Bronze PVD	2.403
149	Finox Br. Nickel	2.194	726	Warm Bronze Br. PVD	2.567
299	Matte Black	2.194	710	Brass PVD	2.403
720	Nickel PVD	2.403	727	Brass Br. PVD	2.567
706	Black Metal PVD	2.403	187	Aged Bronze	2.567
707	Black Metal Br. PVD	2.567	713	Antique Brass	2.567
030	Copper PVD	2.403	845	Dark Bronze	2.567
708	Copper Br. PVD	2.567			

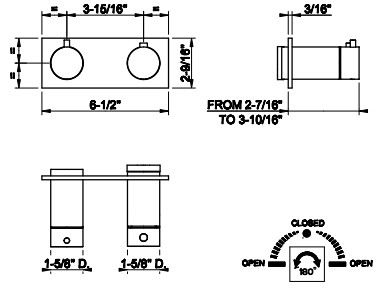

54169+63335

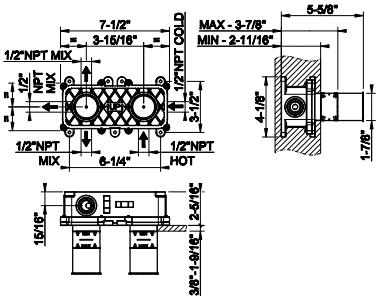

54169

In-wall thermostatic rough valve for 1/2/3-way diverter function
- 1/2" connections
- Anti-scalding
- Service stops not included
- Non-Shared Function

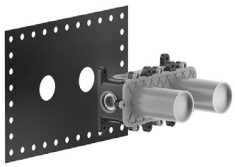

239	Steel Br.	843

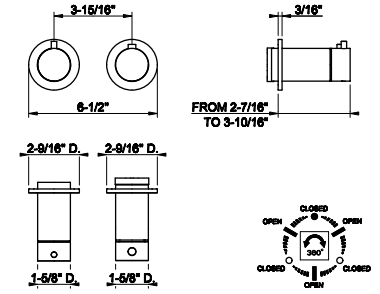

63335

TRIM PARTS ONLY External parts for 3-way diverter thermostatic and volume control
- Single backplate
- 1/2" connections
- Anti-scalding
- Requires in-wall rough valve 54169



031	Chrome	1.468	735	Warm Bronze PVD	2.174
149	Finox Br. Nickel	1.982	726	Warm Bronze Br. PVD	2.318
299	Matte Black	1.982	710	Brass PVD	2.174
720	Nickel PVD	2.174	727	Brass Br. PVD	2.318
706	Black Metal PVD	2.174	187	Aged Bronze	2.318
707	Black Metal Br. PVD	2.318	713	Antique Brass	2.318
030	Copper PVD	2.174	845	Dark Bronze	2.318
708	Copper Br. PVD	2.318			

54169+63336

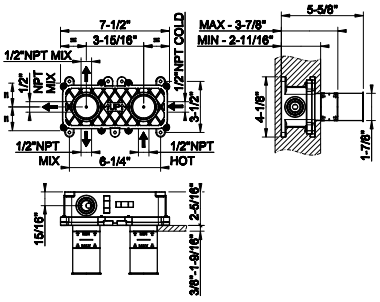

54169

In-wall thermostatic rough valve for 1/2/3-way diverter function
- 1/2" connections
- Anti-scalding
- Service stops not included
- Non-Shared Function

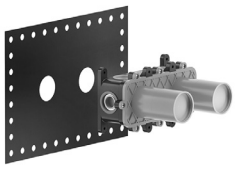

239	Steel Br.	843

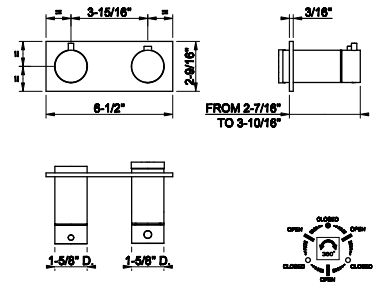

63336

TRIMS PARTS ONLY External parts for 3 -way diverter thermostatic and volume control
- Single backplates
- 1/2" connections
- Anti-scalding
- Requires in-wall rough valve 54169



031	Chrome	1.625	735	Warm Bronze PVD	2.403
149	Finox Br. Nickel	2.194	726	Warm Bronze Br. PVD	2.567
299	Matte Black	2.194	710	Brass PVD	2.403
720	Nickel PVD	2.403	727	Brass Br. PVD	2.567
706	Black Metal PVD	2.403	187	Aged Bronze	2.567
707	Black Metal Br. PVD	2.567	713	Antique Brass	2.567
030	Copper PVD	2.403	845	Dark Bronze	2.567
708	Copper Br. PVD	2.567			



09272

In-wall single exit pressure balance rough valve
• 1/2” connections

031	Chrome	371

09272+63573

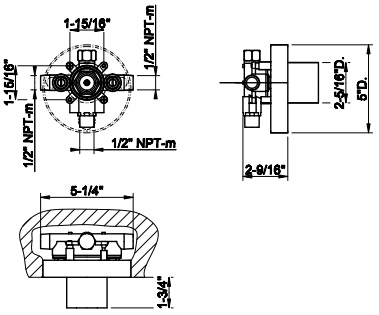



63573

TRIM PARTS ONLY External parts for single exit pressure balance
• Single backplate
• 1/2” connections
• Requires in-wall rough valve 09272
• ADA compliant

031	Chrome	552	735	Warm Bronze PVD	818
149	Finox Br. Nickel	747	726	Warm Bronze Br. PVD	873
299	Matte Black	747	710	Brass PVD	818
720	Nickel PVD	818	727	Brass Br. PVD	873
706	Black Metal PVD	818	187	Aged Bronze	873
707	Black Metal Br. PVD	873	713	Antique Brass	873
030	Copper PVD	818	845	Dark Bronze	873
708	Copper Br. PVD	873			

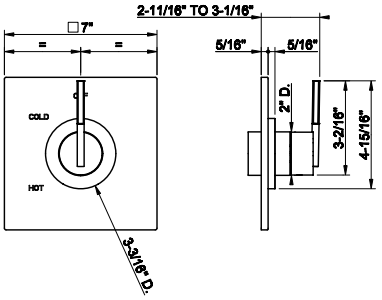



09274

In-wall pressure balance rough valve with 2-way diverter
• 1/2” connections
• Non-Shared Function

031	Chrome	443

09274+63574

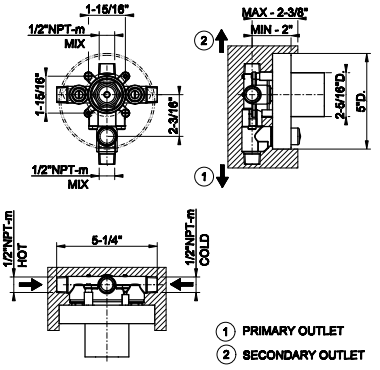



63574

TRIM PARTS ONLY External parts for pressure balance with 2-way diverter
• Single backplate
• 1/2” connections
• Requires in-wall rough valve 09274

031	Chrome	960	735	Warm Bronze PVD	1.421
149	Finox Br. Nickel	1.297	726	Warm Bronze Br. PVD	1.516
299	Matte Black	1.297	710	Brass PVD	1.421
720	Nickel PVD	1.421	727	Brass Br. PVD	1.516
706	Black Metal PVD	1.421	187	Aged Bronze	1.516
707	Black Metal Br. PVD	1.516	713	Antique Brass	1.516
030	Copper PVD	1.421	845	Dark Bronze	1.516
708	Copper Br. PVD	1.516			

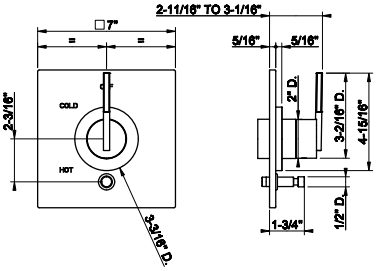

INGRANAGGIO

39693+39752

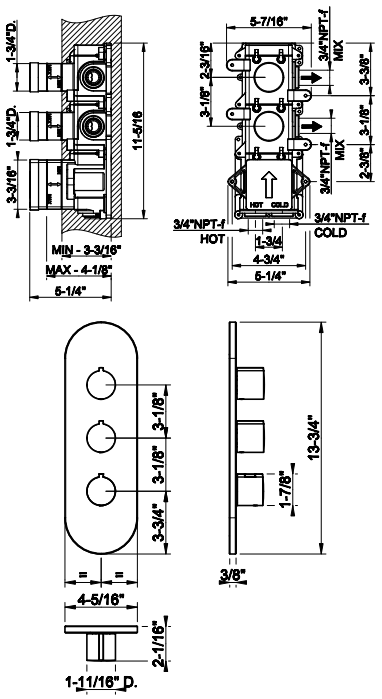

39693

In-wall thermostatic rough valve with 2 volume controls
- High capacity
- 3/4" connections
- Vertical/Horizontal application
- Anti-scalding

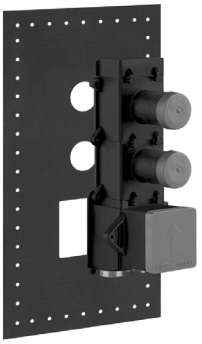

031	Chrome	1.903

39752

TRIM PARTS ONLY External parts for thermostatic with 2 volume controls
- Single backplate
- High Capacity
- 3/4" connections
- Vertical/horizontal application
- Anti-scalding
- Requires in-wall rough valve 39693



031	Chrome	2.197	735	Warm Bronze PVD	3.252
149	Finox Br. Nickel	2.966	726	Warm Bronze Br. PVD	3.471
299	Matte Black	2.966	710	Brass PVD	3.252
147	Chrome Br.	2.966	727	Brass Br. PVD	3.471
720	Nickel PVD	3.252	187	Aged Bronze	3.471
706	Black Metal PVD	3.252	713	Antique Brass	3.471
707	Black Metal Br. PVD	3.471	845	Dark Bronze	3.471
030	Copper PVD	3.252	279	Matte White	2.966
708	Copper Br. PVD	3.471			

39693+39644

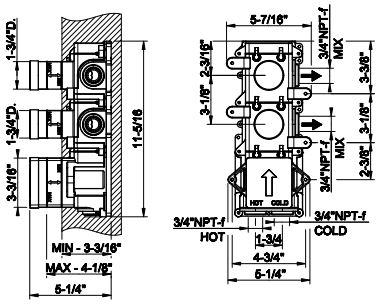

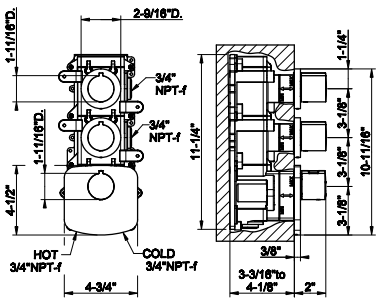

39693

In-wall thermostatic rough valve with 2 volume controls
- High capacity
- 3/4" connections
- Vertical/Horizontal application
- Anti-scalding

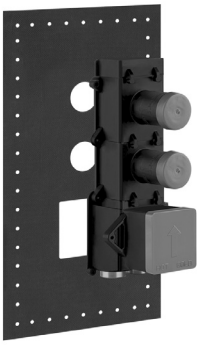

031	Chrome	1.903

39644

TRIM PARTS ONLY External parts for thermostatic with 2 volume controls
- Separate backplate
- High Capacity
- 3/4" connections
- Vertical/horizontal application
- Anti-scalding
- Requires in-wall rough valve 39693



031	Chrome	2.149	735	Warm Bronze PVD	3.915
149	Finox Br. Nickel	3.571	726	Warm Bronze Br. PVD	4.178
299	Matte Black	3.571	710	Brass PVD	3.915
147	Chrome Br.	3.571	727	Brass Br. PVD	4.178
720	Nickel PVD	3.915	187	Aged Bronze	4.178
706	Black Metal PVD	3.915	713	Antique Brass	4.178
707	Black Metal Br. PVD	4.178	845	Dark Bronze	4.178
030	Copper PVD	3.915	279	Matte White	3.571
708	Copper Br. PVD	4.178			

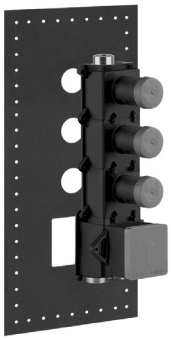

39695

In-wall thermostatic rough valve with 3 volume controls
- High capacity
- 3/4” connections
- Vertical/Horizontal application
- Anti-scalding

031	Chrome	2.197

39695+39754

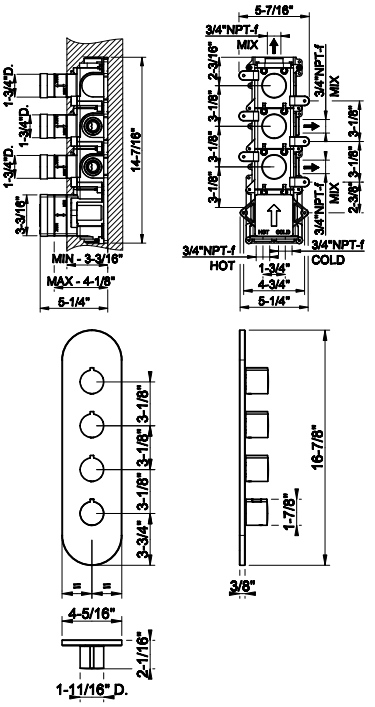



39754

TRIM PARTS ONLY External parts for thermostatic with 3 volume controls
- Single backplate
- High Capacity
- 3/4” connections
- Vertical/horizontal application
- Anti-scalding
- Requires in-wall rough valve 39695

031	Chrome	2.277	735	Warm Bronze PVD	3.371
149	Finox Br. Nickel	3.076	726	Warm Bronze Br. PVD	3.600
299	Matte Black	3.076	710	Brass PVD	3.371
147	Chrome Br.	3.076	727	Brass Br. PVD	3.600
720	Nickel PVD	3.371	187	Aged Bronze	3.600
706	Black Metal PVD	3.371	713	Antique Brass	3.600
707	Black Metal Br. PVD	3.600	845	Dark Bronze	3.600
030	Copper PVD	3.371	279	Matte White	3.076
708	Copper Br. PVD	3.600			

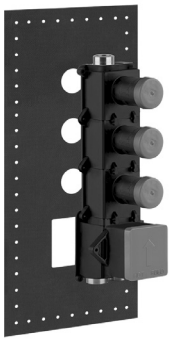

39695

In-wall thermostatic rough valve with 3 volume controls
- High capacity
- 3/4” connections
- Vertical/Horizontal application
- Anti-scalding

031	Chrome	2.197

39695+39646

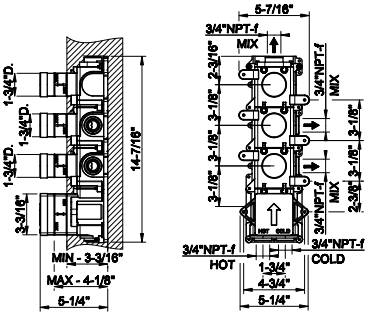



39646

TRIM PARTS ONLY External parts for thermostatic with 3 volume controls
- Separate backplate
- High Capacity
- 3/4” connections
- Vertical/horizontal application
- Anti-scalding
- Requires in-wall rough valve 39695

031	Chrome	2.498	735	Warm Bronze PVD	4.502
149	Finox Br. Nickel	4.107	726	Warm Bronze Br. PVD	4.805
299	Matte Black	4.107	710	Brass PVD	4.502
147	Chrome Br.	4.107	727	Brass Br. PVD	4.805
720	Nickel PVD	4.502	187	Aged Bronze	4.805
706	Black Metal PVD	4.502	713	Antique Brass	4.805
707	Black Metal Br. PVD	4.805	845	Dark Bronze	4.805
030	Copper PVD	4.502	279	Matte White	4.107
708	Copper Br. PVD	4.805			

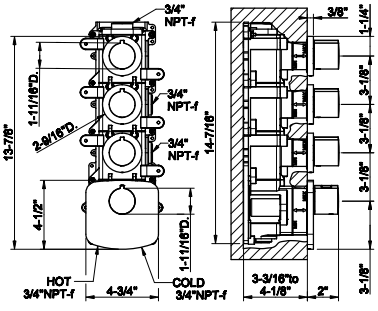

39699+39756

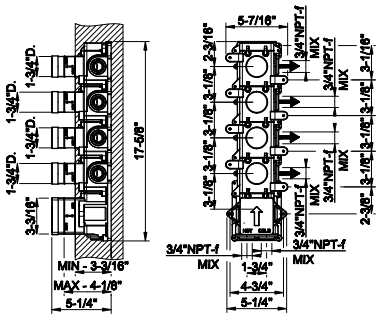

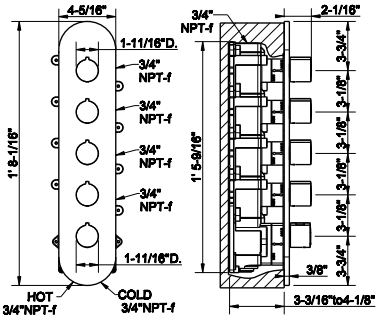

39699

In-wall thermostatic rough valve with 4 volume controls
- High capacity
- 3/4" connections
- Vertical/Horizontal application
- Anti-scalding
- Max flow rate 1.75 GPM

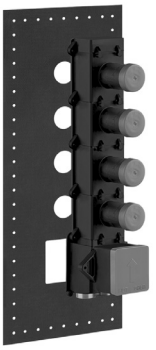

031	Chrome	2.498

39756

TRIM PARTS ONLY External parts for thermostatic with 4 volume controls
- Single backplate
- High Capacity
- 3/4" connections
- Vertical/horizontal application
- Anti-scalding
- Requires in-wall rough valve 39699



031	Chrome	2.637	735	Warm Bronze PVD	3.904
149	Finox Br. Nickel	3.561	726	Warm Bronze Br. PVD	4.168
299	Matte Black	3.561	710	Brass PVD	3.904
147	Chrome Br.	3.561	727	Brass Br. PVD	4.168
720	Nickel PVD	3.904	187	Aged Bronze	4.168
706	Black Metal PVD	3.904	713	Antique Brass	4.168
707	Black Metal Br. PVD	4.168	845	Dark Bronze	4.168
030	Copper PVD	3.904	279	Chrome	3.561
708	Copper Br. PVD	4.168			

39699+39650

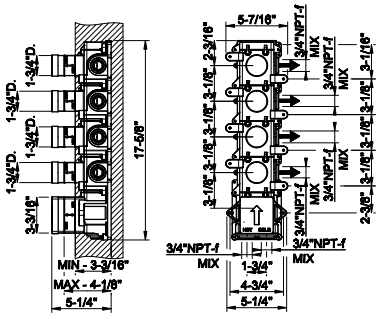

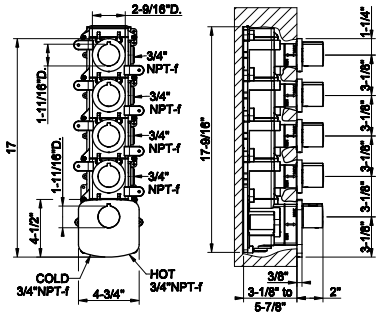

39699

In-wall thermostatic rough valve with 4 volume controls
- High capacity
- 3/4" connections
- Vertical/Horizontal application
- Anti-scalding
- Max flow rate 1.75 GPM

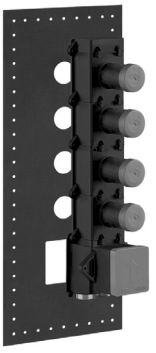

031	Chrome	2.498

39650

TRIM PARTS ONLY External parts for thermostatic with 4 volume controls
- Separate backplate
- High Capacity
- 3/4" connections
- Vertical/horizontal application
- Anti-scalding
- Requires in-wall rough valve 39699



031	Chrome	2.829	735	Warm Bronze PVD	5.381
149	Finox Br. Nickel	4.910	726	Warm Bronze Br. PVD	5.745
299	Matte Black	4.910	710	Brass PVD	5.381
147	Chrome Br.	4.910	727	Brass Br. PVD	5.745
720	Nickel PVD	5.381	187	Aged Bronze	5.745
706	Black Metal PVD	5.381	713	Antique Brass	5.745
707	Black Metal Br. PVD	5.745	845	Dark Bronze	5.745
030	Copper PVD	5.381	279	Matte White	4.910
708	Copper Br. PVD	5.745			

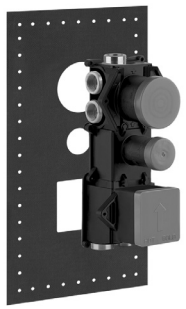

39601

In-wall thermostatic rough valve with 5-way diverter
- High capacity
- 3/4” connections
- Vertical/Horizontal application
- Anti-scalding
- Non shared function

031	Chrome	2.637

39601+39750

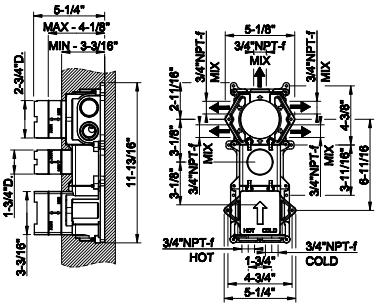

39750

TRIM PARTS ONLY External parts for 5-way thermostatic diverter with volume control
- Single backplate
- High Capacity
- 3/4” connections
- Vertical/horizontal application
- Anti-scalding
- Requires in-wall rough valve 39601



031	Chrome	2.204	735	Warm Bronze PVD	3.262
149	Finox Br. Nickel	2.976	726	Warm Bronze Br. PVD	3.483
299	Matte Black	2.976	710	Brass PVD	3.262
147	Chrome Br.	2.976	727	Brass Br. PVD	3.483
720	Nickel PVD	3.262	187	Aged Bronze	3.483
706	Black Metal PVD	3.262	713	Antique Brass	3.483
707	Black Metal Br. PVD	3.483	845	Dark Bronze	3.483
030	Copper PVD	3.262	279	Matte White	2.976
708	Copper Br. PVD	3.483			

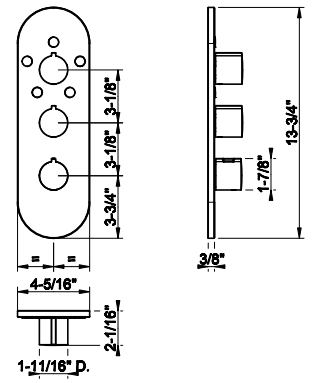

39681

In-wall thermostatic rough valve for individual mixer
- High capacity
- 3/4” connections
- Vertical/Horizontal application
- Anti-scalding

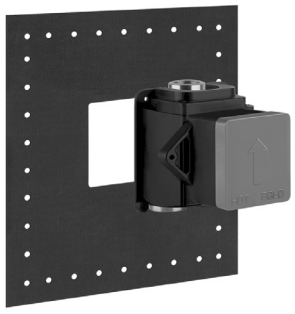

031	Chrome	1.169

39681+39666

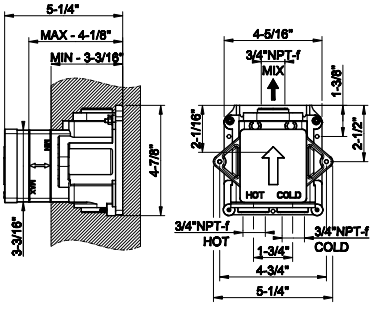

39666

TRIM PARTS ONLY External parts for individual thermostatic mixer
- High Capacity
- 3/4” connections
- Vertical/horizontal application
- Anti-scalding
- Requires in-wall rough valve 39681



031	Chrome	954	735	Warm Bronze PVD	1.811
149	Finox Br. Nickel	1.652	726	Warm Bronze Br. PVD	1.932
299	Matte Black	1.652	710	Brass PVD	1.811
147	Chrome Br.	1.652	727	Brass Br. PVD	1.932
720	Nickel PVD	1.811	187	Aged Bronze	1.932
706	Black Metal PVD	1.811	713	Antique Brass	1.932
707	Black Metal Br. PVD	1.932	845	Dark Bronze	1.932
030	Copper PVD	1.811	279	Matte White	1.652
708	Copper Br. PVD	1.932			

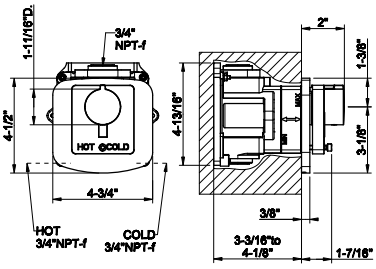

INGRANAGGIO

39683+43268

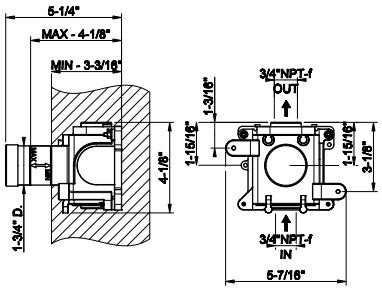

39683

In-wall thermostatic rough valve parts for volume control
- High capacity
- 3/4” connections
- Vertical/Horizontal application
- Anti-scalding

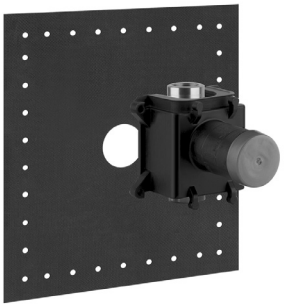

031	Chrome	582

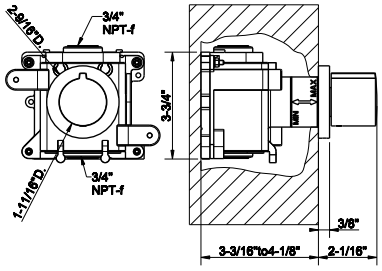

43268

TRIM PARTS ONLY External parts for individual thermostatic volume control
- Single backplate
- High Capacity
- 3/4” connections
- Vertical/horizontal application
- Anti-scalding
- Requires in-wall rough valve 39683



031	Chrome	580	735	Warm Bronze PVD	1.154
149	Finox Br. Nickel	1.054	726	Warm Bronze Br. PVD	1.231
299	Matte Black	1.054	710	Brass PVD	1.154
147	Chrome Br.	1.054	727	Brass Br. PVD	1.231
720	Nickel PVD	1.154	187	Aged Bronze	1.231
706	Black Metal PVD	1.154	713	Antique Brass	1.231
707	Black Metal Br. PVD	1.231	845	Dark Bronze	1.231
030	Copper PVD	1.154	279	Matte White	1.054
708	Copper Br. PVD	1.231			

63554

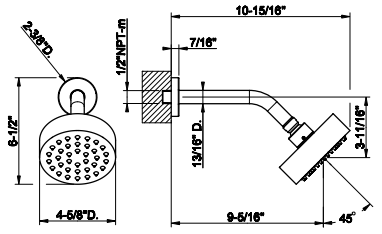

Wall-mounted anti-limescale showerhead. RIGATO
- 1/2” connections
- Projection from wall to center 9-5/16”
- Total projection 10-15/16”
- Max flow rate 1.75 GPM



031	Chrome	1.759	708	Copper Br. PVD	2.779
149	Finox Br. Nickel	2.375	735	Warm Bronze PVD	2.604
299	Matte Black	2.375	726	Warm Bronze Br. PVD	2.779
720	Nickel PVD	2.604	710	Brass PVD	2.604
706	Black Metal PVD	2.604	727	Brass Br. PVD	2.779
707	Black Metal Br. PVD	2.779	187	Aged Bronze	2.779
030	Copper PVD	2.604	713	Antique Brass	2.779

63556

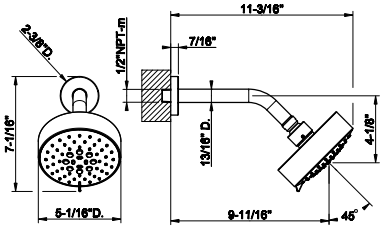

Multifunctional adjustable wall-mounted anti-limescale showerhead. RIGATO
- 1/2” connections
- Projection from wall to center 9-11/16”
- Total projection 11-3/16”
- Max flow rate 1.75 GPM



031	Chrome	2.111	708	Copper Br. PVD	3.334
149	Finox Br. Nickel	2.850	735	Warm Bronze PVD	3.124
299	Matte Black	2.850	726	Warm Bronze Br. PVD	3.334
720	Nickel PVD	3.124	710	Brass PVD	3.124
706	Black Metal PVD	3.124	727	Brass Br. PVD	3.334
707	Black Metal Br. PVD	3.334	187	Aged Bronze	3.334
030	Copper PVD	3.124	713	Antique Brass	3.334

63548



Wall-mounted adjustable shower head with arm RIGATO.
- 1/2” connections.
- Projection from wall to center 13-1/2”
- Total projection 17-3/4”
- Max flow rate 1.75 GPM

031	Chrome	2.488	708	Copper Br. PVD	3.931
149	Finox Br. Nickel	3.361	735	Warm Bronze PVD	3.685
299	Matte Black	3.361	726	Warm Bronze Br. PVD	3.931
720	Nickel PVD	3.685	710	Brass PVD	3.685
706	Black Metal PVD	3.685	727	Brass Br. PVD	3.931
707	Black Metal Br. PVD	3.931	187	Aged Bronze	3.931
030	Copper PVD	3.685	713	Antique Brass	3.931

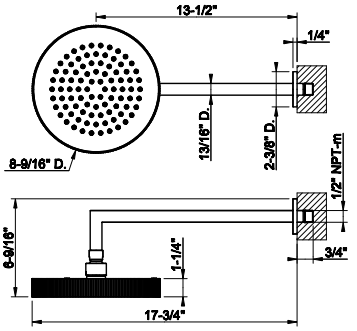

63552



Ceiling -mounted shower head with arm RIGATO.
- 1/2” connections.
- Projection from ceiling 11-1/16”
- Max flow rate 1.75 GPM

031	Chrome	2.363	708	Copper Br. PVD	3.732
149	Finox Br. Nickel	3.188	735	Warm Bronze PVD	3.495
299	Matte Black	3.188	726	Warm Bronze Br. PVD	3.732
720	Nickel PVD	3.495	710	Brass PVD	3.495
706	Black Metal PVD	3.495	727	Brass Br. PVD	3.732
707	Black Metal Br. PVD	3.732	187	Aged Bronze	3.732
030	Copper PVD	3.495	713	Antique Brass	3.732

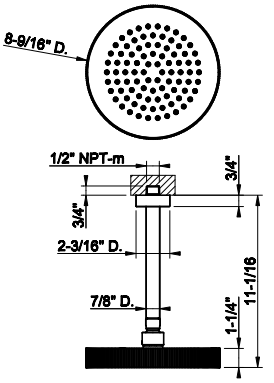

63348



Wall-mounted adjustable shower head with arm.
- 1/2” connections.
- Projection from wall to center 13-7/8”
- Total projection 18-3/4”
- Max flow rate 1.75 GPM

031	Chrome	1.087	726	Warm Bronze Br. PVD	1.715
149	Finox Br. Nickel	1.466	710	Brass PVD	1.605
299	Matte Black	1.466	727	Brass Br. PVD	1.715
720	Nickel PVD	1.605	246	Gold PVD	1.827
706	Black Metal PVD	1.605	716	Gold Br. PVD	1.827
707	Black Metal Br. PVD	1.715	187	Aged Bronze	1.715
030	Copper PVD	1.605	713	Antique Brass	1.715
708	Copper Br. PVD	1.715	845	Dark Bronze	1.715
735	Warm Bronze PVD	1.605	279	Matte White	1.466

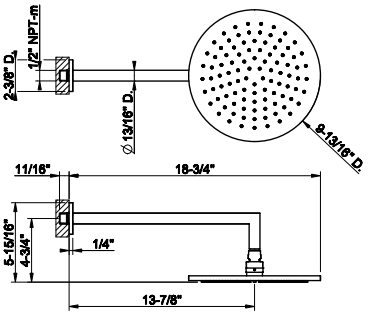

63352



Ceiling-mounted adjustable shower head with arm.
- 1/2” connections.
- Projection from ceiling 10-1/4”
- Max flow rate 1.75 GPM

031	Chrome	966	726	Warm Bronze Br. PVD	1.528
149	Finox Br. Nickel	1.306	710	Brass PVD	1.431
299	Matte Black	1.306	727	Brass Br. PVD	1.528
720	Nickel PVD	1.431	246	Gold PVD	1.624
706	Black Metal PVD	1.431	716	Gold Br. PVD	1.624
707	Black Metal Br. PVD	1.528	187	Aged Bronze	1.528
030	Copper PVD	1.431	713	Antique Brass	1.528
708	Copper Br. PVD	1.528	845	Dark Bronze	1.528
735	Warm Bronze PVD	1.431	279	Matte White	1.306

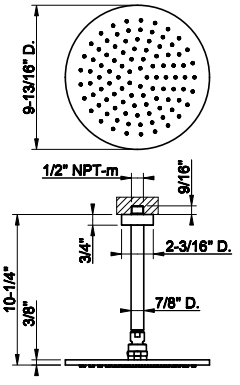

INGRANAGGIO

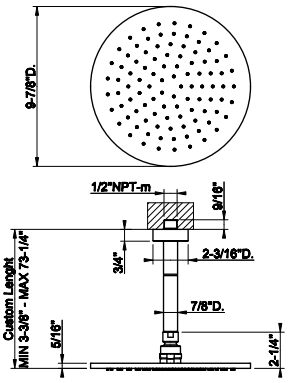

63350

Ceiling-mounted, shower head with arm, custom length
- 1/2" connections
- Projection from ceiling MIN 3-3/8" MAX 73-1/4"
- Max flow rate 1.75 GPM

031	Chrome	1.387	726	Warm Bronze Br. PVD	2.190
149	Finox Br. Nickel	1.870	710	Brass PVD	2.052
299	Matte Black	1.870	727	Brass Br. PVD	2.190
720	Nickel PVD	2.052	246	Gold PVD	2.333
706	Black Metal PVD	2.052	716	Gold Br. PVD	2.333
707	Black Metal Br. PVD	2.190	187	Aged Bronze	2.190
030	Copper PVD	2.052	713	Antique Brass	2.190
708	Copper Br. PVD	2.190	845	Dark Bronze	2.190
735	Warm Bronze PVD	2.052	279	Matte White	1.870



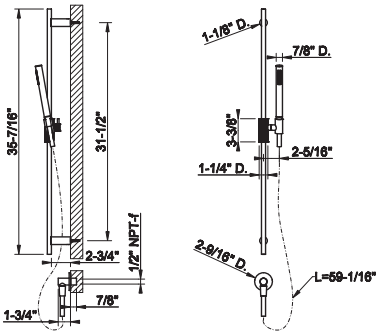

63582

Handshower and adjustable sliding rail set. RIGATO
- Adjustable bar
- Adjustable hook
- 59" Flex hose
- Wall elbow
- Max flow rate1.75 GPM.

031	Chrome	1.656	735	Warm Bronze PVD	2.450
149	Finox Br. Nickel	2.236	726	Warm Bronze Br. PVD	2.617
299	Matte Black	2.236	710	Brass PVD	2.450
720	Nickel PVD	2.450	727	Brass Br. PVD	2.617
706	Black Metal PVD	2.450	187	Aged Bronze	2.617
707	Black Metal Br. PVD	2.617	713	Antique Brass	2.617
030	Copper PVD	2.450	845	Dark Bronze	2.617
708	Copper Br. PVD	2.617			



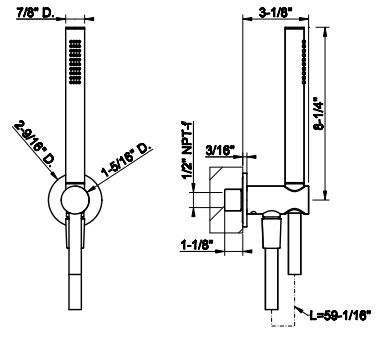

63329

Handshower set
- Fixed hook
- Wall elbow
- 59" flex hose
- Max flow rate 1.75 GPM

031	Chrome	847	735	Warm Bronze PVD	1.254
149	Finox Br. Nickel	1.141	726	Warm Bronze Br. PVD	1.337
299	Matte Black	1.141	710	Brass PVD	1.254
720	Nickel PVD	1.254	727	Brass Br. PVD	1.337
706	Black Metal PVD	1.254	187	Aged Bronze	1.337
707	Black Metal Br. PVD	1.337	713	Antique Brass	1.337
030	Copper PVD	1.254	845	Dark Bronze	1.337
708	Copper Br. PVD	1.337			



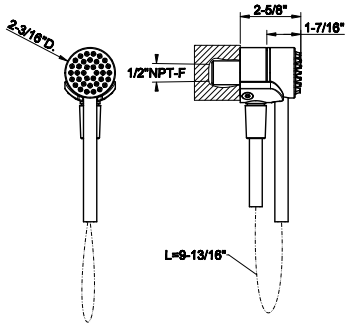

63099

Magnetic anti-limestone handshower set
- Fixed hook
- Wall elbow
- 59" Cromalux flex hose
- Max flow rate 1.75 GPM

031	Chrome	1.213	726	Warm Bronze Br. PVD	1.916
149	Finox Br. Nickel	1.638	710	Brass PVD	1.794
299	Matte Black	1.638	727	Brass Br. PVD	1.916
720	Nickel PVD	1.794	246	Gold PVD	2.037
706	Black Metal PVD	1.794	716	Gold Br. PVD	2.037
707	Black Metal Br. PVD	1.916	187	Aged Bronze	1.916
030	Copper PVD	1.794	713	Antique Brass	1.916
708	Copper Br. PVD	1.916	845	Dark Bronze	1.916
735	Warm Bronze PVD	1.794			



32971

Round body spray
- 1/2” connections
- Max flow rate 1 GPM at 60 PSI



031	Chrome	552	726	Warm Bronze Br. PVD	873
149	Finox Br. Nickel	746	710	Brass PVD	840
299	Matte Black	746	727	Brass Br. PVD	873
147	Chrome Br.	766	246	Gold PVD	929
720	Nickel PVD	818	716	Gold Br. PVD	929
706	Black Metal PVD	818	187	Aged Bronze	873
707	Black Metal Br. PVD	873	713	Antique Brass	873
030	Copper PVD	818	845	Dark Bronze	873
708	Copper Br. PVD	873	279	Matte White	746
735	Warm Bronze PVD	840			

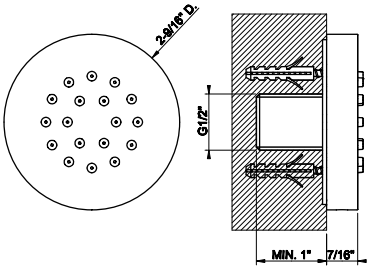

32985

In-wall rough valve for pivotable body spray 32982



031	Chrome	406

32985+32982

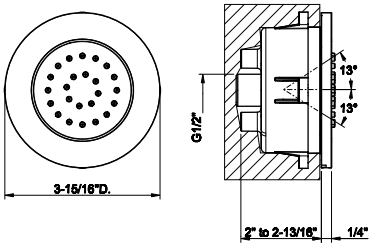

32982

TRIM PARTS ONLY Round in-wall pivotable body spray
- 1/2” connections
- Requires in-wall rough valve 32985
- Max flow rate 1 GPM at60 PSI



031	Chrome	773	726	Warm Bronze Br. PVD	1.223
149	Finox Br. Nickel	1.045	710	Brass PVD	1.145
299	Matte Black	1.045	727	Brass Br. PVD	1.223
147	Chrome Br.	1.045	246	Gold PVD	1.300
720	Nickel PVD	1.145	716	Gold Br. PVD	1.300
706	Black Metal PVD	1.145	187	Aged Bronze	1.223
707	Black Metal Br. PVD	1.223	713	Antique Brass	1.223
030	Copper PVD	1.145	845	Dark Bronze	1.223
708	Copper Br. PVD	1.223	279	Matte White	1.045
735	Warm Bronze PVD	1.145			

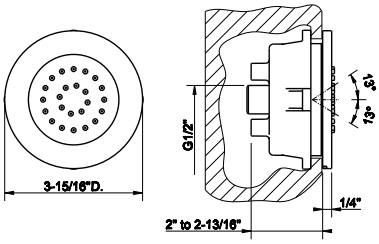

13375

Pivotable body spray
- 1/2” connections
- Max flow rate 0.9 GPM at 60 PSI



031	Chrome	405	726	Warm Bronze Br. PVD	639
149	Finox Br. Nickel	547	710	Brass PVD	598
299	Matte Black	547	727	Brass Br. PVD	639
147	Chrome Br.	547	246	Gold PVD	680
720	Nickel PVD	598	716	Gold Br. PVD	680
706	Black Metal PVD	598	187	Aged Bronze	639
707	Black Metal Br. PVD	639	713	Antique Brass	639
030	Copper PVD	598	845	Dark Bronze	639
708	Copper Br. PVD	639	279	Matte White	547
735	Warm Bronze PVD	598			

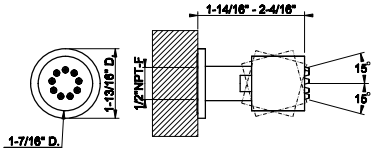

INGRANAGGIO

65295

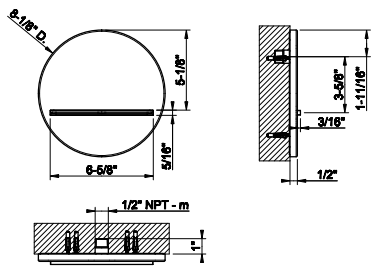

Wall-fixing cascade spout
- 1/2” connections
- Flow rate 4.8 GPM at 60 PSI



031	Chrome	1.937	726	Warm Bronze Br. PVD	3.058
149	Finox Br. Nickel	2.614	710	Brass PVD	2.864
299	Matte Black	2.614	727	Brass Br. PVD	3.058
720	Nickel PVD	2.864	246	Gold PVD	3.255
706	Black Metal PVD	2.864	716	Gold Br. PVD	3.255
707	Black Metal Br. PVD	3.058	187	Aged Bronze	3.058
030	Copper PVD	2.864	713	Antique Brass	3.058
708	Copper Br. PVD	3.058	845	Dark Bronze	3.058
735	Warm Bronze PVD	2.864	279	Matte White	2.614

20293

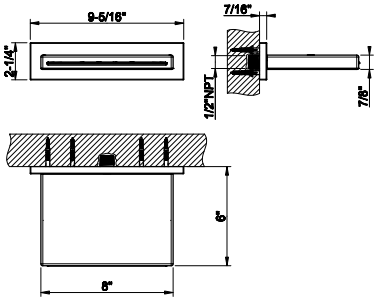

Wall-fixing cascade spout with separate control (not included)
- 1/2” connections
- Projection from the wall 6”
- Flow rate 4.2 GPM at 60 PSI



239	Steel Br.	2.966	726	Warm Bronze Br. PVD	4.687
238	Mirror Steel	2.966	710	Brass PVD	4.390
299	Matte Black	4.006	727	Brass Br. PVD	4.687
720	Nickel PVD	4.390	246	Gold PVD	4.985
706	Black Metal PVD	4.390	716	Gold Br. PVD	4.985
707	Black Metal Br. PVD	4.687	187	Aged Bronze	4.687
030	Copper PVD	4.390	713	Antique Brass	4.687
708	Copper Br. PVD	4.687	845	Dark Bronze	4.687
735	Warm Bronze PVD	4.390	279	Matte White	4.006

63461

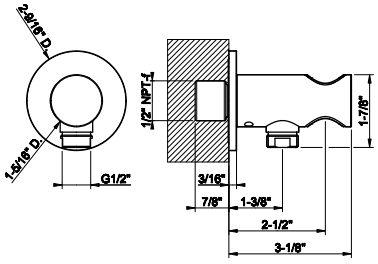

Wall elbow with built in water intake and fixed hook
- 1/2” connection



031	Chrome	457	735	Warm Bronze PVD	677
149	Finox Br. Nickel	617	726	Warm Bronze Br. PVD	723
299	Matte Black	617	710	Brass PVD	677
720	Nickel PVD	677	727	Brass Br. PVD	723
706	Black Metal PVD	677	187	Aged Bronze	723
707	Black Metal Br. PVD	723	713	Antique Brass	723
030	Copper PVD	677	845	Dark Bronze	723
708	Copper Br. PVD	723			

63469

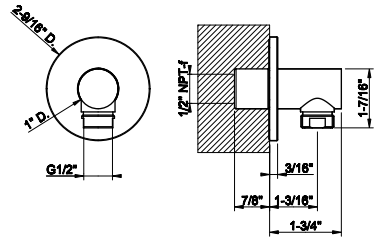

Wall-elbow with backplate
- 1/2” connection



031	Chrome	298	735	Warm Bronze PVD	443
149	Finox Br. Nickel	404	726	Warm Bronze Br. PVD	472
299	Matte Black	404	710	Brass PVD	443
720	Nickel PVD	443	727	Brass Br. PVD	472
706	Black Metal PVD	443	187	Aged Bronze	472
707	Black Metal Br. PVD	472	713	Antique Brass	472
030	Copper PVD	443	845	Dark Bronze	472
708	Copper Br. PVD	472			

58157

Fixed handshower hook.



031	Chrome	245	726	Warm Bronze Br. PVD	387
149	Finox Br. Nickel	332	710	Brass PVD	363
299	Matte Black	332	727	Brass Br. PVD	387
720	Nickel PVD	363	246	Gold PVD	411
706	Black Metal PVD	363	716	Gold Br. PVD	411
707	Black Metal Br. PVD	387	187	Aged Bronze	387
030	Copper PVD	363	713	Antique Brass	387
708	Copper Br. PVD	387	845	Dark Bronze	387
735	Warm Bronze PVD	363			

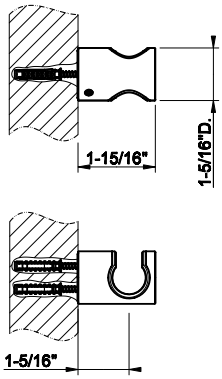

58160

Adjustable handshower hook.



031	Chrome	434	726	Warm Bronze Br. PVD	686
149	Finox Br. Nickel	586	710	Brass PVD	642
299	Matte Black	586	727	Brass Br. PVD	686
720	Nickel PVD	642	246	Gold PVD	728
706	Black Metal PVD	642	716	Gold Br. PVD	728
707	Black Metal Br. PVD	686	187	Aged Bronze	686
030	Copper PVD	642	713	Antique Brass	686
708	Copper Br. PVD	686	845	Dark Bronze	686
735	Warm Bronze PVD	642			

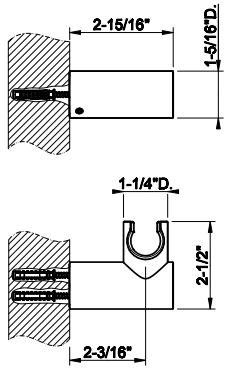

14371

Handshower
- Max flow rate 1.75 GPM



031	Chrome	268	735	Warm Bronze PVD	425
149	Finox Br. Nickel	363	726	Warm Bronze Br. PVD	450
299	Matte Black	363	710	Brass PVD	425
147	Chrome Br.	363	727	Brass Br. PVD	450
720	Nickel PVD	425	246	Gold PVD	478
706	Black Metal PVD	425	716	Gold Br. PVD	478
707	Black Metal Br. PVD	450	187	Aged Bronze	450
030	Copper PVD	425	713	Antique Brass	450
708	Copper Br. PVD	450	845	Dark Bronze	450

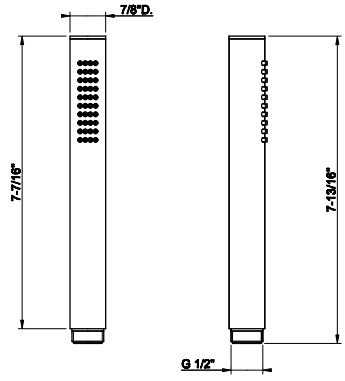

14370

Antilimestone handshower
- Single spray
- Max flow rate 1.75 GPM



031	Chrome	189	726	Warm Bronze Br. PVD	465
149	Finox Br. Nickel	377	710	Brass PVD	435
299	Matte Black	377	727	Brass Br. PVD	465
147	Chrome Br.	377	246	Gold PVD	493
720	Nickel PVD	435	716	Gold Br. PVD	493
706	Black Metal PVD	435	187	Aged Bronze	465
707	Black Metal Br. PVD	465	713	Antique Brass	465
030	Copper PVD	435	845	Dark Bronze	465
708	Copper Br. PVD	465	279	Matte White	377
735	Warm Bronze PVD	435			

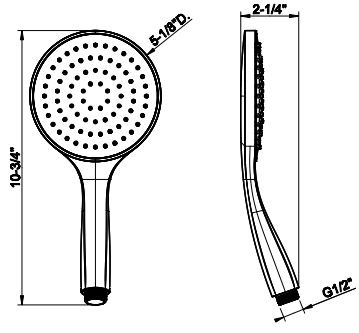

INGRANAGGIO

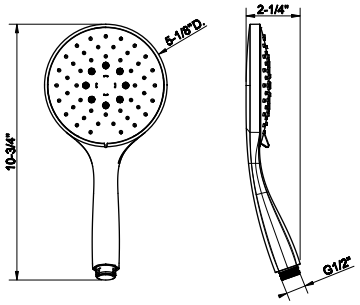

14376

Handshower with white insert
- 3-pattern spray
- Max flow rate 1.75 GPM

031	Chrome	390	726	Warm Bronze Br. PVD	656
149	Finox Br. Nickel	527	710	Brass PVD	616
299	Matte Black	527	727	Brass Br. PVD	656
147	Chrome Br.	527	246	Gold PVD	681
720	Nickel PVD	616	716	Gold Br. PVD	681
706	Black Metal PVD	616	187	Aged Bronze	656
707	Black Metal Br. PVD	656	713	Antique Brass	656
030	Copper PVD	616	845	Dark Bronze	656
708	Copper Br. PVD	656	279	Matte White	527
735	Warm Bronze PVD	616			



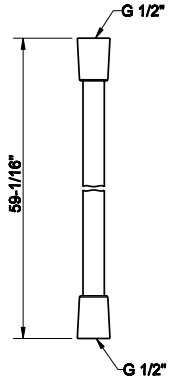

01637

59” flex hose

031	Chrome	134	726	Warm Bronze Br. PVD	214
149	Finox Br. Nickel	173	710	Brass PVD	203
299	Matte Black	173	727	Brass Br. PVD	214
147	Chrome Br.	173	246	Gold PVD	227
720	Nickel PVD	203	716	Gold Br. PVD	227
706	Black Metal PVD	203	187	Aged Bronze	214
707	Black Metal Br. PVD	214	713	Antique Brass	214
030	Copper PVD	203	845	Dark Bronze	214
708	Copper Br. PVD	214	279	Matte White	173
735	Warm Bronze PVD	203			



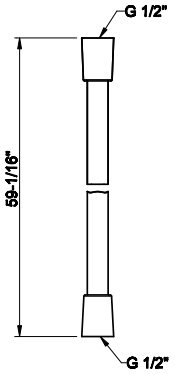

54137

59” black flex hose with options to change the metal ends with desired finish

031	Chrome	183	735	Warm Bronze PVD	290
239	Steel Br.	179	726	Warm Bronze Br. PVD	283
299	Matte Black	241	710	Brass PVD	290
720	Nickel PVD	248	727	Brass Br. PVD	283
706	Black Metal PVD	290	187	Aged Bronze	248
707	Black Metal Br. PVD	283	713	Antique Brass	248
030	Copper PVD	290	845	Dark Bronze	248
708	Copper Br. PVD	283			



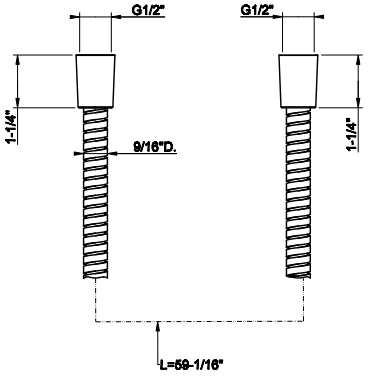

01724

Metal flexible hose, 59” length, 1/2” connector.

031	Chrome	196	726	Warm Bronze Br. PVD	308
149	Finox Br. Nickel	260	710	Brass PVD	288
299	Matte Black	260	727	Brass Br. PVD	308
147	Chrome Br.	260	246	Gold PVD	288
720	Nickel PVD	308	716	Gold Br. PVD	341
706	Black Metal PVD	288	187	Aged Bronze	308
707	Black Metal Br. PVD	308	713	Antique Brass	308
030	Copper PVD	288	845	Dark Bronze	308
708	Copper Br. PVD	308	279	Matte White	259
735	Warm Bronze PVD	288			





INGRANAGGIO
ACCESSOIRES

63801

Wall-mounted soap dish, white



031	Chrome	538	708	Copper Br. PVD	851
149	Finox Br. Nickel	727	735	Warm Bronze PVD	797
299	Matte Black	727	726	Warm Bronze Br. PVD	851
720	Nickel PVD	797	710	Brass PVD	797
706	Black Metal PVD	797	727	Brass Br. PVD	851
707	Black Metal Br. PVD	851	187	Aged Bronze	851
030	Copper PVD	797	713	Antique Brass	851

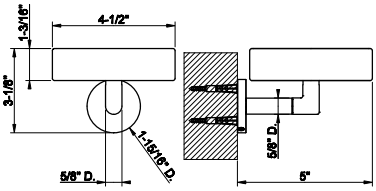

63802

Wall-mounted soap dish, black



031	Chrome	538	708	Copper Br. PVD	851
149	Finox Br. Nickel	727	735	Warm Bronze PVD	797
299	Matte Black	727	726	Warm Bronze Br. PVD	851
720	Nickel PVD	797	710	Brass PVD	797
706	Black Metal PVD	797	727	Brass Br. PVD	851
707	Black Metal Br. PVD	851	187	Aged Bronze	851
030	Copper PVD	797	713	Antique Brass	851

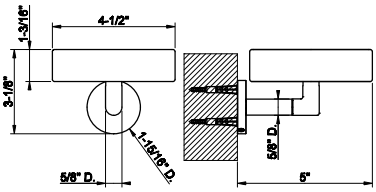

63807

Wall-mounted holder, white



031	Chrome	605	708	Copper Br. PVD	956
149	Finox Br. Nickel	819	735	Warm Bronze PVD	896
299	Matte Black	819	726	Warm Bronze Br. PVD	956
720	Nickel PVD	896	710	Brass PVD	896
706	Black Metal PVD	896	727	Brass Br. PVD	956
707	Black Metal Br. PVD	956	187	Aged Bronze	956
030	Copper PVD	896	713	Antique Brass	956

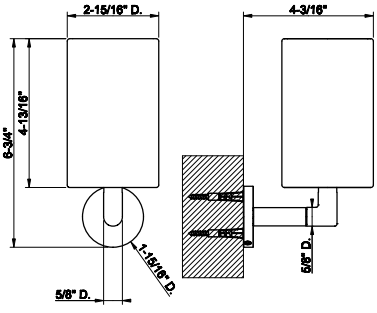

63808

Wall-mounted holder, black



031	Chrome	605	708	Copper Br. PVD	956
149	Finox Br. Nickel	819	735	Warm Bronze PVD	896
299	Matte Black	819	726	Warm Bronze Br. PVD	956
720	Nickel PVD	896	710	Brass PVD	896
706	Black Metal PVD	896	727	Brass Br. PVD	956
707	Black Metal Br. PVD	956	187	Aged Bronze	956
030	Copper PVD	896	713	Antique Brass	956

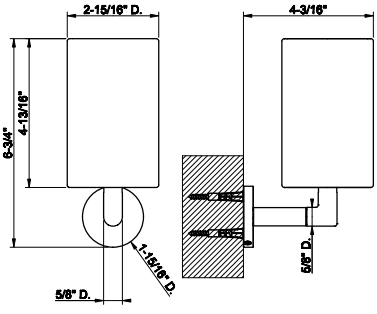

INGRANAGGIO ACCESSORIES

63813

Wall-mounted liquid soap dispenser , white

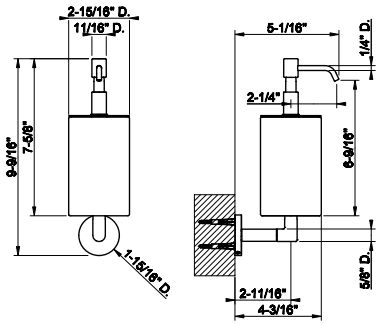

031	Chrome	838	708	Copper Br. PVD	1.323
149	Finox Br. Nickel	1.132	735	Warm Bronze PVD	1.238
299	Matte Black	1.132	726	Warm Bronze Br. PVD	1.323
720	Nickel PVD	1.238	710	Brass PVD	1.238
706	Black Metal PVD	1.238	727	Brass Br. PVD	1.323
707	Black Metal Br. PVD	1.323	187	Aged Bronze	1.323
030	Copper PVD	1.238	713	Antique Brass	1.323



63814

Wall-mounted liquid soap dispenser - black

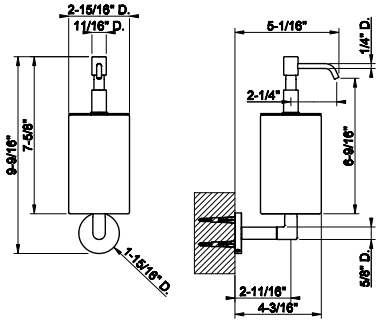

031	Chrome	838	708	Copper Br. PVD	1.323
149	Finox Br. Nickel	1.132	735	Warm Bronze PVD	1.238
299	Matte Black	1.132	726	Warm Bronze Br. PVD	1.323
720	Nickel PVD	1.238	710	Brass PVD	1.238
706	Black Metal PVD	1.238	727	Brass Br. PVD	1.323
707	Black Metal Br. PVD	1.323	187	Aged Bronze	1.323
030	Copper PVD	1.238	713	Antique Brass	1.323



63819

Wall-mounted brush holder, white

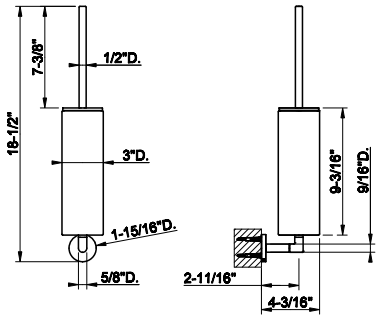

031	Chrome	824	708	Copper Br. PVD	1.301
149	Finox Br. Nickel	1.111	735	Warm Bronze PVD	1.222
299	Matte Black	1.111	726	Warm Bronze Br. PVD	1.301
720	Nickel PVD	1.222	710	Brass PVD	1.222
706	Black Metal PVD	1.222	727	Brass Br. PVD	1.301
707	Black Metal Br. PVD	1.301	187	Aged Bronze	1.301
030	Copper PVD	1.222	713	Antique Brass	1.301



63820

Wall-mounted brush holder, black

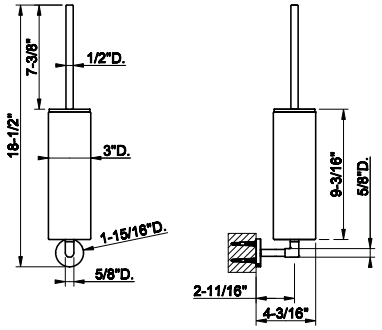

031	Chrome	824	708	Copper Br. PVD	1.301
149	Finox Br. Nickel	1.111	735	Warm Bronze PVD	1.222
299	Matte Black	1.111	726	Warm Bronze Br. PVD	1.301
720	Nickel PVD	1.222	710	Brass PVD	1.222
706	Black Metal PVD	1.222	727	Brass Br. PVD	1.301
707	Black Metal Br. PVD	1.301	187	Aged Bronze	1.301
030	Copper PVD	1.222	713	Antique Brass	1.301



58525

Standing soap holder, white

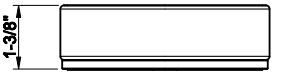



031	Chrome	391	726	Warm Bronze Br. PVD	618
149	Finox Br. Nickel	528	710	Brass PVD	580
299	Matte Black	528	727	Brass Br. PVD	618
720	Nickel PVD	580	246	Gold PVD	658
706	Black Metal PVD	580	716	Gold Br. PVD	658
707	Black Metal Br. PVD	618	187	Aged Bronze	618
030	Copper PVD	580	713	Antique Brass	618
708	Copper Br. PVD	618	845	Dark Bronze	618
735	Warm Bronze PVD	580	279	Matte White	528

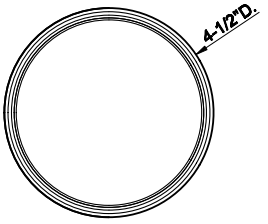

58526

Standing soap holder, black

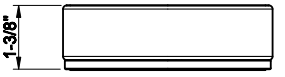



031	Chrome	391	726	Warm Bronze Br. PVD	618
149	Finox Br. Nickel	528	710	Brass PVD	580
299	Matte Black	528	727	Brass Br. PVD	618
720	Nickel PVD	580	246	Gold PVD	658
706	Black Metal PVD	580	716	Gold Br. PVD	658
707	Black Metal Br. PVD	618	187	Aged Bronze	618
030	Copper PVD	580	713	Antique Brass	618
708	Copper Br. PVD	618	845	Dark Bronze	618
735	Warm Bronze PVD	580	279	Matte White	528

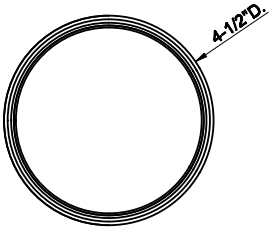

58531

Standing tumbler holder, white

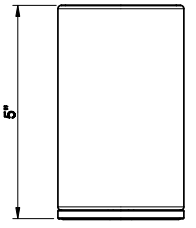



031	Chrome	436	726	Warm Bronze Br. PVD	689
149	Finox Br. Nickel	590	710	Brass PVD	647
299	Matte Black	590	727	Brass Br. PVD	689
720	Nickel PVD	647	246	Gold PVD	733
706	Black Metal PVD	647	716	Gold Br. PVD	733
707	Black Metal Br. PVD	689	187	Aged Bronze	689
030	Copper PVD	647	713	Antique Brass	689
708	Copper Br. PVD	689	845	Dark Bronze	689
735	Warm Bronze PVD	647	279	Matte White	590

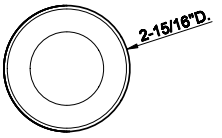

58532

Standing tumbler holder, black

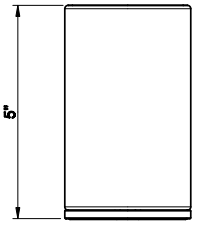



031	Chrome	436	726	Warm Bronze Br. PVD	689
149	Finox Br. Nickel	590	710	Brass PVD	647
299	Matte Black	590	727	Brass Br. PVD	689
720	Nickel PVD	647	246	Gold PVD	733
706	Black Metal PVD	647	716	Gold Br. PVD	733
707	Black Metal Br. PVD	689	187	Aged Bronze	689
030	Copper PVD	647	713	Antique Brass	689
708	Copper Br. PVD	689	845	Dark Bronze	689
735	Warm Bronze PVD	647	279	Matte White	590

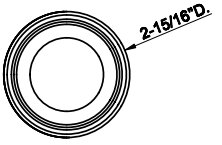

INGRANAGGIO ACCESSORIES

66437

Standing soap dispenser holder, white

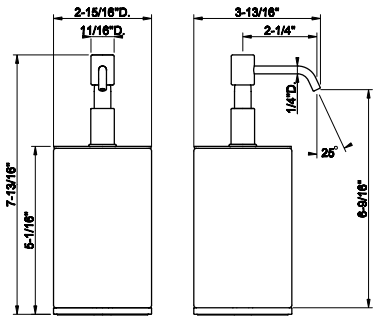

031	Chrome	726	726	Warm Bronze Br. PVD	1.148
149	Finox Br. Nickel	980	710	Brass PVD	1.076
299	Matte Black	980	727	Brass Br. PVD	1.148
720	Nickel PVD	1.076	246	Gold PVD	1.221
706	Black Metal PVD	1.076	716	Gold Br. PVD	1.221
707	Black Metal Br. PVD	1.148	187	Aged Bronze	1.148
030	Copper PVD	1.076	713	Antique Brass	1.148
708	Copper Br. PVD	1.148	845	Dark Bronze	1.148
735	Warm Bronze PVD	1.076	279	Matte White	980



66438

Standing soap dispenser holder, black

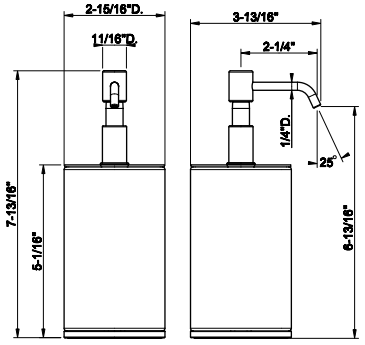

031	Chrome	726	726	Warm Bronze Br. PVD	1.148
149	Finox Br. Nickel	980	710	Brass PVD	1.076
299	Matte Black	980	727	Brass Br. PVD	1.148
720	Nickel PVD	1.076	246	Gold PVD	1.221
706	Black Metal PVD	1.076	716	Gold Br. PVD	1.221
707	Black Metal Br. PVD	1.148	187	Aged Bronze	1.148
030	Copper PVD	1.076	713	Antique Brass	1.148
708	Copper Br. PVD	1.148	845	Dark Bronze	1.148
735	Warm Bronze PVD	1.076	279	Matte White	980



63743

Standing brush holder, white

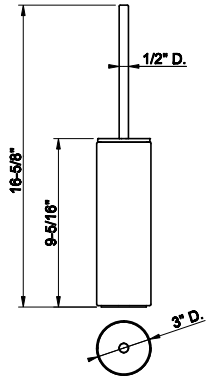

031	Chrome	595	726	Warm Bronze Br. PVD	939
149	Finox Br. Nickel	802	710	Brass PVD	883
299	Matte Black	802	727	Brass Br. PVD	939
720	Nickel PVD	883	246	Gold PVD	1.000
706	Black Metal PVD	883	716	Gold Br. PVD	1.000
707	Black Metal Br. PVD	939	187	Aged Bronze	939
030	Copper PVD	883	713	Antique Brass	939
708	Copper Br. PVD	939	845	Dark Bronze	939
735	Warm Bronze PVD	883	279	Matte White	802



63744

Standing brush holder, black

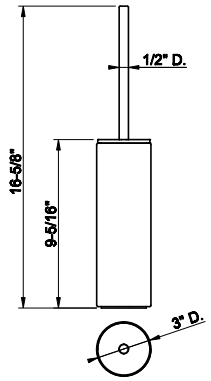

031	Chrome	595	726	Warm Bronze Br. PVD	939
149	Finox Br. Nickel	802	710	Brass PVD	883
299	Matte Black	802	727	Brass Br. PVD	939
720	Nickel PVD	883	246	Gold PVD	1.000
706	Black Metal PVD	883	716	Gold Br. PVD	1.000
707	Black Metal Br. PVD	939	187	Aged Bronze	939
030	Copper PVD	883	713	Antique Brass	939
708	Copper Br. PVD	939	845	Dark Bronze	939
735	Warm Bronze PVD	883	279	Matte White	802



63855

Wall-mounted tissue holder. Vertical or horizontal application



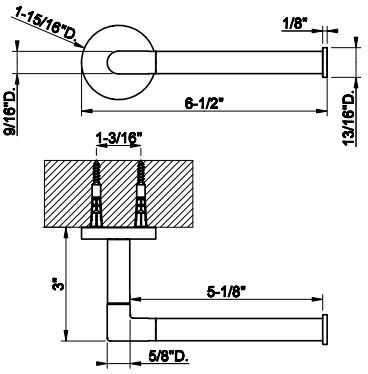

031	Chrome	371	708	Copper Br. PVD	588
149	Finox Br. Nickel	500	735	Warm Bronze PVD	550
299	Matte Black	500	726	Warm Bronze Br. PVD	588
720	Nickel PVD	550	710	Brass PVD	550
706	Black Metal PVD	550	727	Brass Br. PVD	588
707	Black Metal Br. PVD	588	187	Aged Bronze	588
030	Copper PVD	550	713	Antique Brass	588

63897

Wall-mounted 12” towel bar



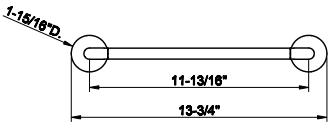

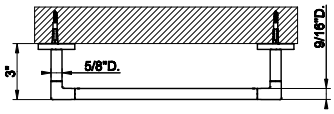

031	Chrome	625	708	Copper Br. PVD	986
149	Finox Br. Nickel	842	735	Warm Bronze PVD	925
299	Matte Black	842	726	Warm Bronze Br. PVD	986
720	Nickel PVD	925	710	Brass PVD	925
706	Black Metal PVD	925	727	Brass Br. PVD	986
707	Black Metal Br. PVD	986	187	Aged Bronze	986
030	Copper PVD	925	713	Antique Brass	986

63900

Wall-mounted 18” towel bar



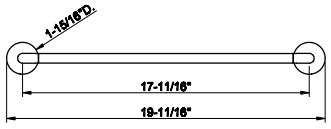

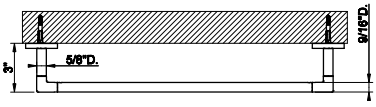

031	Chrome	644	708	Copper Br. PVD	1.019
149	Finox Br. Nickel	869	735	Warm Bronze PVD	954
299	Matte Black	869	726	Warm Bronze Br. PVD	1.019
720	Nickel PVD	954	710	Brass PVD	954
706	Black Metal PVD	954	727	Brass Br. PVD	1.019
707	Black Metal Br. PVD	1.019	187	Aged Bronze	1.019
030	Copper PVD	954	713	Antique Brass	1.019

63903

Wall-mounted 24” towel bar



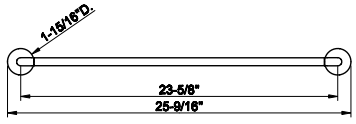

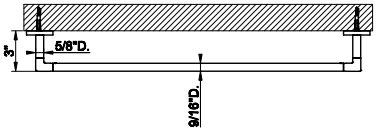

031	Chrome	657	708	Copper Br. PVD	1.035
149	Finox Br. Nickel	889	735	Warm Bronze PVD	972
299	Matte Black	889	726	Warm Bronze Br. PVD	1.035
720	Nickel PVD	972	710	Brass PVD	972
706	Black Metal PVD	972	727	Brass Br. PVD	1.035
707	Black Metal Br. PVD	1.035	187	Aged Bronze	1.035
030	Copper PVD	972	713	Antique Brass	1.035

INGRANAGGIO ACCESSORIES

63909

Towel ring

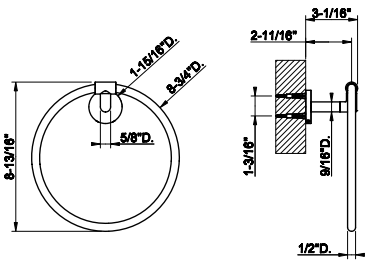



031	Chrome	570	708	Copper Br. PVD	902
149	Finox Br. Nickel	770	735	Warm Bronze PVD	847
299	Matte Black	770	726	Warm Bronze Br. PVD	902
720	Nickel PVD	847	710	Brass PVD	847
706	Black Metal PVD	847	727	Brass Br. PVD	902
707	Black Metal Br. PVD	902	187	Aged Bronze	902
030	Copper PVD	847	713	Antique Brass	902

63821

Wall-mounted garment hook

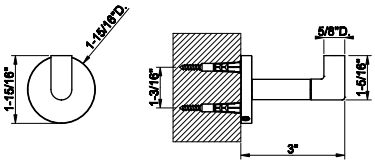



031	Chrome	236	708	Copper Br. PVD	375
149	Finox Br. Nickel	320	735	Warm Bronze PVD	351
299	Matte Black	320	726	Warm Bronze Br. PVD	375
720	Nickel PVD	351	710	Brass PVD	351
706	Black Metal PVD	351	727	Brass Br. PVD	375
707	Black Metal Br. PVD	375	187	Aged Bronze	375
030	Copper PVD	351	713	Antique Brass	375

63924

Towel rail for glass fixing - 12" length

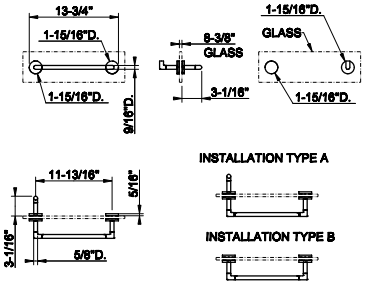



031	Chrome	1.039	708	Copper Br. PVD	1.643
149	Finox Br. Nickel	1.402	735	Warm Bronze PVD	1.537
299	Matte Black	1.402	726	Warm Bronze Br. PVD	1.643
720	Nickel PVD	1.537	710	Brass PVD	1.537
706	Black Metal PVD	1.537	727	Brass Br. PVD	1.643
707	Black Metal Br. PVD	1.643	187	Aged Bronze	1.643
030	Copper PVD	1.537	713	Antique Brass	1.643

63926

Towel rail for glass fixing - 18" length

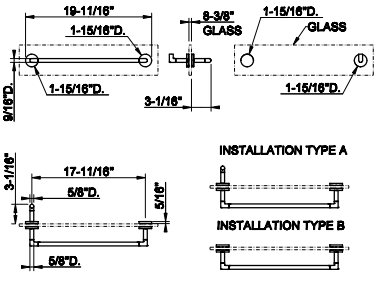

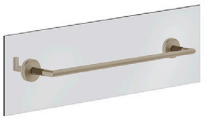

031	Chrome	1.056	708	Copper Br. PVD	1.668
149	Finox Br. Nickel	1.425	735	Warm Bronze PVD	1.562
299	Matte Black	1.425	726	Warm Bronze Br. PVD	1.668
720	Nickel PVD	1.562	710	Brass PVD	1.562
706	Black Metal PVD	1.562	727	Brass Br. PVD	1.668
707	Black Metal Br. PVD	1.668	187	Aged Bronze	1.668
030	Copper PVD	1.562	713	Antique Brass	1.668

63928

Towel rail for glass fixing - 24” length



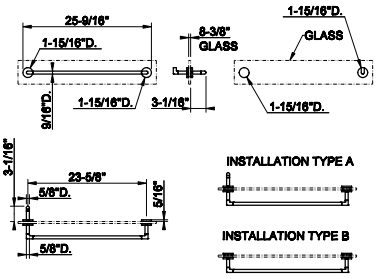

031	Chrome	1.069	708	Copper Br. PVD	1.690
149	Finox Br. Nickel	1.443	735	Warm Bronze PVD	1.583
299	Matte Black	1.443	726	Warm Bronze Br. PVD	1.690
720	Nickel PVD	1.583	710	Brass PVD	1.583
706	Black Metal PVD	1.583	727	Brass Br. PVD	1.690
707	Black Metal Br. PVD	1.690	187	Aged Bronze	1.690
030	Copper PVD	1.583	713	Antique Brass	1.690

58424

Safety grip-handle for bathtub and shower enclosure
• 18” length



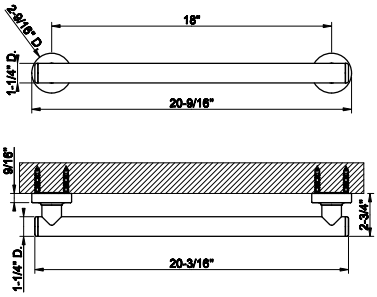

031	Chrome	1.932	726	Warm Bronze Br. PVD	3.054
149	Finox Br. Nickel	2.611	710	Brass PVD	2.862
299	Matte Black	2.611	727	Brass Br. PVD	3.056
720	Nickel PVD	2.862	246	Gold PVD	3.243
706	Black Metal PVD	2.862	716	Gold Br. PVD	3.243
707	Black Metal Br. PVD	3.056	845	Dark Bronze	3.056
030	Copper PVD	2.862	187	Aged Bronze	3.056
708	Copper Br. PVD	3.056	713	Antique Brass	3.056
735	Warm Bronze PVD	2.862	279	Matte White	2.611

58430

Safety grip-handle for bathtub and shower enclosure
• 24” length



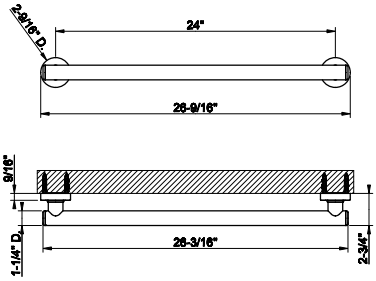

031	Chrome	1.967	726	Warm Bronze Br. PVD	3.108
149	Finox Br. Nickel	2.656	710	Brass PVD	2.911
299	Matte Black	2.656	727	Brass Br. PVD	3.108
720	Nickel PVD	2.911	246	Gold PVD	3.304
706	Black Metal PVD	2.911	716	Gold Br. PVD	3.304
707	Black Metal Br. PVD	3.108	845	Dark Bronze	3.108
030	Copper PVD	2.911	187	Aged Bronze	3.108
708	Copper Br. PVD	3.108	713	Antique Brass	3.108
735	Warm Bronze PVD	2.911	279	Matte White	2.656

58432

Safety grip-handle for bathtub and shower enclosure
• 36” length



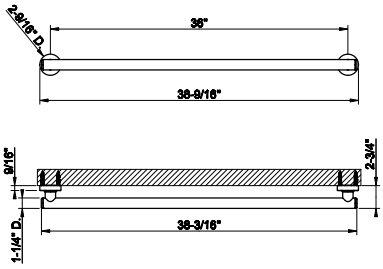

031	Chrome	2.165	726	Warm Bronze Br. PVD	3.419
149	Finox Br. Nickel	2.921	710	Brass PVD	3.203
299	Matte Black	2.921	727	Brass Br. PVD	3.419
720	Nickel PVD	3.203	246	Gold PVD	3.637
706	Black Metal PVD	3.203	716	Gold Br. PVD	3.637
707	Black Metal Br. PVD	3.419	845	Dark Bronze	3.419
030	Copper PVD	3.203	187	Aged Bronze	3.419
708	Copper Br. PVD	3.419	713	Antique Brass	3.419
735	Warm Bronze PVD	3.203	279	Matte White	2.921

INGRANAGGIO ACCESSORIES

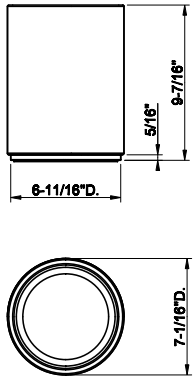

45590

White waste-paper basket



031	Chrome	1.056	726	Warm Bronze Br. PVD	1.663
149	Finox Br. Nickel	1.369	710	Brass PVD	1.559
299	Matte Black	1.316	727	Brass Br. PVD	1.663
720	Nickel PVD	1.559	246	Gold PVD	1.775
706	Black Metal PVD	1.559	716	Gold Br. PVD	1.775
707	Black Metal Br. PVD	1.663	845	Dark Bronze	1.663
030	Copper PVD	1.559	187	Aged Bronze	1.663
708	Copper Br. PVD	1.663	713	Antique Brass	1.663
735	Warm Bronze PVD	1.559	279	Matte White	1.316



INGRANAGGIO
TOTAL LOOK

54635



Flush Actuator Plate INGRANAGGIO
•Compatible with GEBERIT models: 111.597.001, 111.902.005, 111.798.00.1, 111.335.00.5
•Withoutvisible fixing system
•ADA COMPLIANT

031	Chrome	1.285	708	Copper Br. PVD	2.028
149	Finox Br. Nickel	1.732	735	Warm Bronze PVD	1.903
299	Matte Black	1.732	726	Warm Bronze Br. PVD	2.028
720	Nickel PVD	1.903	710	Brass PVD	1.903
706	Black Metal PVD	1.903	727	Brass Br. PVD	2.028
707	Black Metal Br. PVD	2.028	187	Aged Bronze	2.028
030	Copper PVD	1.903	713	Antique Brass	2.028

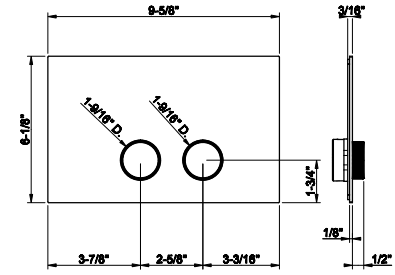

54601



Counter washbasin In stainless steel, without overflow waste.
Without basin waste. It can be combined with waste 54597.

239	Steel Br.	2.449	708	Copper Br. PVD	6.986
299	Matte Black	4.431	726	Warm Bronze Br. PVD	6.986
707	Black Metal Br. PVD	6.986	727	Brass Br. PVD	6.986

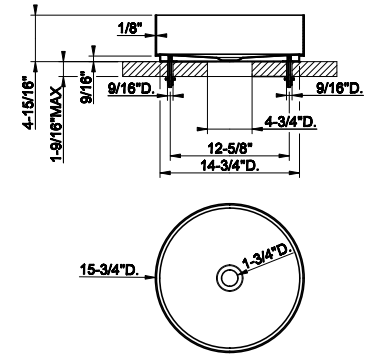

01578

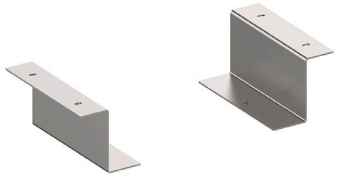

Undermounted washbasin brackets for 54601, 54605, 54606.

031	Chrome	428

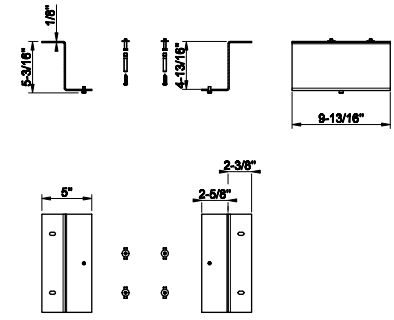

54597



1 1/4" push drain with or without overflow feature
- Recommended for Gessi 316 Collection

239	Steel Br.	212	708	Copper Br. PVD	313
299	Matte Black	287	726	Warm Bronze Br. PVD	313
707	Black Metal Br. PVD	313	727	Brass Br. PVD	313

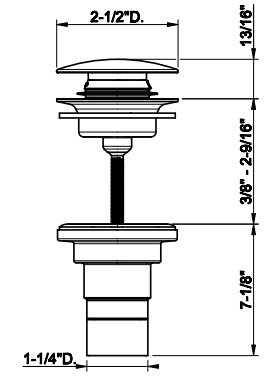

INGRANAGGIO TOTAL LOOK

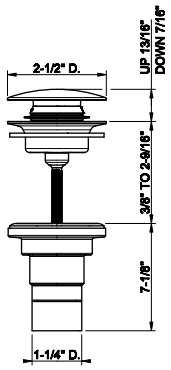

01427

1 1/4" push drain with or without overflow feature



031	Chrome	134	030	Copper PVD	379
239	Steel Br.	134	708	Copper Br. PVD	379
275	Matte Cipria	326	735	Warm Bronze PVD	379
273	Matte Greige	326	726	Warm Bronze Br. PVD	379
277	Glossy Ocra	326	710	Brass PVD	379
278	Glossy Coral	326	727	Brass Br. PVD	379
276	Matte Agave	326	246	Gold PVD	405
299	Matte Black	386	716	Gold Br. PVD	405
720	Nickel PVD	379	187	Aged Bronze	379
706	Black Metal PVD	379	713	Antique Brass	379
707	Black Metal Br. PVD	379	845	Dark Bronze	379


GESSI
HABITO

GESSI

HABITO

TEXTURES

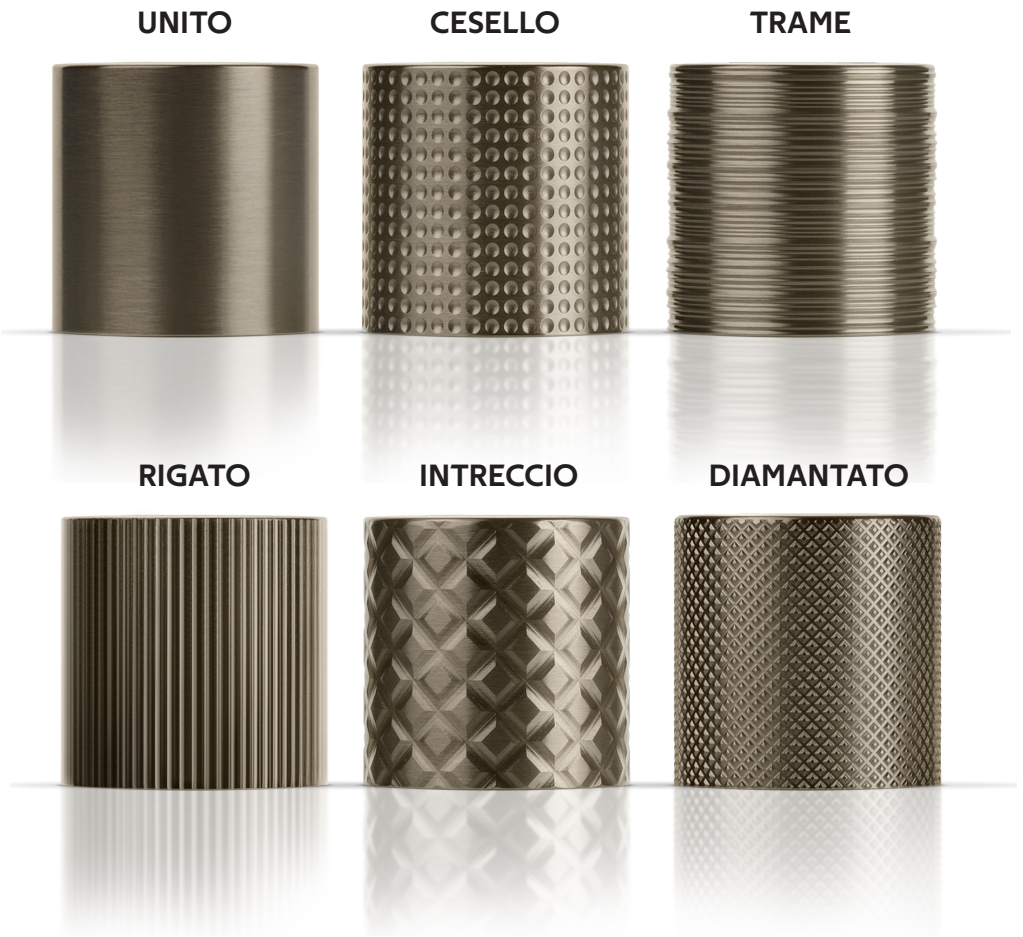


GESSI
HABITO
UNITO

70001



Single lever washbasin mixer with pop-up assembly. UNITO
- Spout projection 5-1/8”
- Height 7-1/2”
- 1-1/4” D. pop-up drain and flexiblehoses with 9/16” – 24 UNEF connections.
- Max flow rate 1.2 GPM

031	Chrome	983	735	Warm Bronze PVD	1.455
149	Finox Br. Nickel	1.328	726	Warm Bronze Br. PVD	1.553
299	Matte Black	1.328	710	Brass PVD	1.455
706	Black Metal PVD	1.455	727	Brass Br. PVD	1.553
707	Black Metal Br. PVD	1.553	845	Dark Bronze	1.553
708	Copper Br. PVD	1.553			

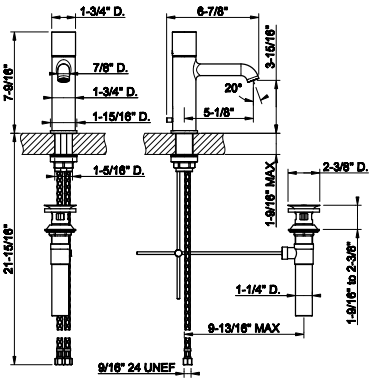

70002



Single lever washbasin mixer without pop-up assembly. UNITO
- Spout projection 5-1/8
- Height 7-1/2”
- Drain not included – see DRAINS section
- Max flow rate 1.2 GPM
- Flexible hoses with 9/16” – 24 UNEF connections.

031	Chrome	895	735	Warm Bronze PVD	1.325
149	Finox Br. Nickel	1.210	726	Warm Bronze Br. PVD	1.415
299	Matte Black	1.210	710	Brass PVD	1.325
706	Black Metal PVD	1.325	727	Brass Br. PVD	1.415
707	Black Metal Br. PVD	1.415	845	Dark Bronze	1.415
708	Copper Br. PVD	1.415			

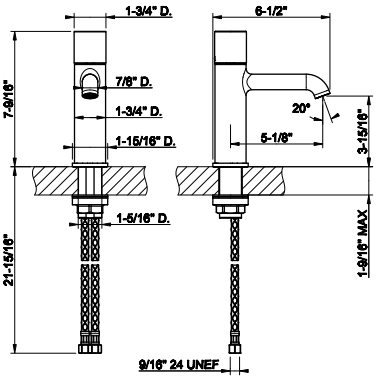

70005



Medium single lever washbasin mixer with pop-up assembly. UNITO
- Spout projection 6-7/16”
- Height 10-1/2”
- 1-1/4” pop up drainand Flexible hoses with 9/16” – 24 UNEF connections.
- Max flow rate 1.2 GPM

031	Chrome	1.159	735	Warm Bronze PVD	1.715
149	Finox Br. Nickel	1.566	726	Warm Bronze Br. PVD	1.830
299	Matte Black	1.566	710	Brass PVD	1.715
706	Black Metal PVD	1.715	727	Brass Br. PVD	1.830
707	Black Metal Br. PVD	1.830	845	Dark Bronze	1.830
708	Copper Br. PVD	1.830			

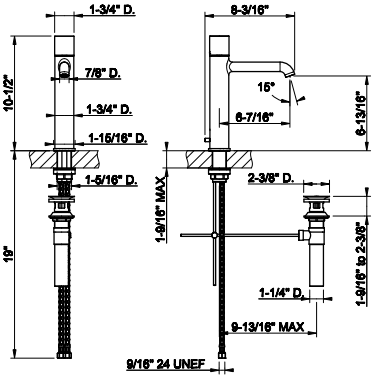

70006



Medium single lever washbasin mixer without pop-up assembly. UNITO
- Spout projection 6-7/16”
- Height 10-1/2”
- Drain not included – see DRAINS section
- Max flow rate 1.2 GPM
- Flexible hoses with 9/16” – 24 UNEF connections.

031	Chrome	1.070	735	Warm Bronze PVD	1.585
149	Finox Br. Nickel	1.445	726	Warm Bronze Br. PVD	1.693
299	Matte Black	1.445	710	Brass PVD	1.585
706	Black Metal PVD	1.585	727	Brass Br. PVD	1.693
707	Black Metal Br. PVD	1.693	845	Dark Bronze	1.693
708	Copper Br. PVD	1.693			

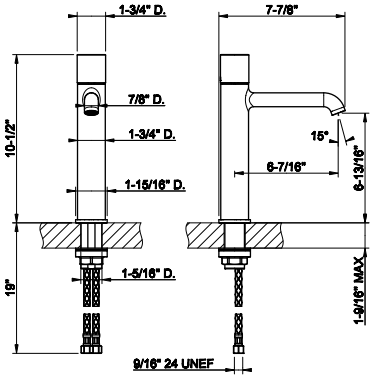

HABITO UNITO

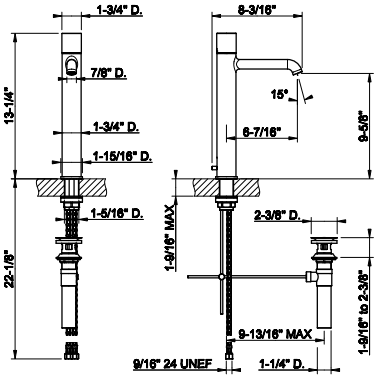

70003

Tall single lever washbasin mixer with pop-up assembly. UNITO
- Spout projection 6-7/16”
- Height 13-1/4”
- 1-1/4” D. pop-up drainand flexible hoses with 9/16” – 24UNEF connections
- Max flow rate 1.2 GPM



031	Chrome	1.255	735	Warm Bronze PVD	1.858
149	Finox Br. Nickel	1.696	726	Warm Bronze Br. PVD	1.985
299	Matte Black	1.696	710	Brass PVD	1.858
706	Black Metal PVD	1.858	727	Brass Br. PVD	1.985
707	Black Metal Br. PVD	1.985	845	Dark Bronze	1.985
708	Copper Br. PVD	1.985			

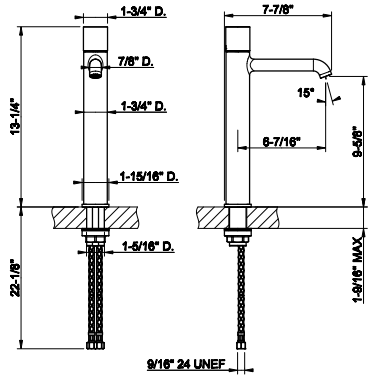

70004

Tall single lever washbasin mixer without pop-up assembly. UNITO
- Spout projection 6-7/16”
- Height 13-1/4”
- Drain not included– seeDRAINS section
- Max flow rate 1.2 GPM
- Flexible hoses with 9/16” – 24 UNEF connections.



031	Chrome	1.168	735	Warm Bronze PVD	1.730
149	Finox Br. Nickel	1.578	726	Warm Bronze Br. PVD	1.845
299	Matte Black	1.578	710	Brass PVD	1.730
706	Black Metal PVD	1.730	727	Brass Br. PVD	1.845
707	Black Metal Br. PVD	1.845	845	Dark Bronze	1.845
708	Copper Br. PVD	1.845			

54197+70088

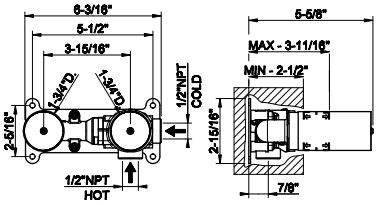

54197

Wall-mounted washbasin mixer rough valve
- Drain not included - See DRAINS section



239	Steel Br.	809			

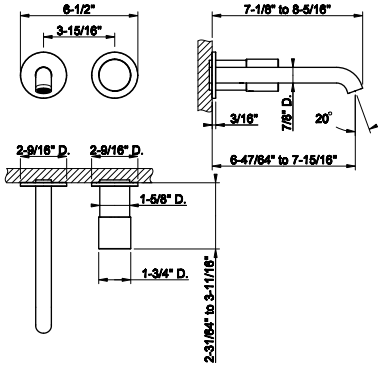

70088

TRIM PARTS ONLY Wall-mounted washbasin mixer trim. UNITO
- Spout projection 6-47/64” to 7-15/16”
- Drain not included - See DRAINSsection
- Requires in-wall rough valve 54197
- Max flow rate 1.2 GPM
- ADA compliant



031	Chrome	884	735	Warm Bronze PVD	1.308
149	Finox Br. Nickel	1.193	726	Warm Bronze Br. PVD	1.395
299	Matte Black	1.193	710	Brass PVD	1.308
706	Black Metal PVD	1.308	727	Brass Br. PVD	1.395
707	Black Metal Br. PVD	1.395	845	Dark Bronze	1.395
708	Copper Br. PVD	1.395			

66102



Wall-mounted washbasin spout only
- Projection 8-1/16”
- 1/2” connections
- Drain not included - See DRAINS section
- Requires mixercontrol
- Max flow rate 1.2 GPM.

031	Chrome	401	720	Nickel PVD	593
275	Matte Cipria	541	706	Black Metal PVD	593
273	Matte Greige	541	707	Black Metal Br. PVD	633
277	Glossy Ocra	633	708	Copper Br. PVD	633
278	Glossy Coral	633	726	Warm Bronze Br. PVD	633
276	Matte Agave	541	727	Brass Br. PVD	633
149	Finox Br. Nickel	541	845	Dark Bronze	633
299	Matte Black	541			

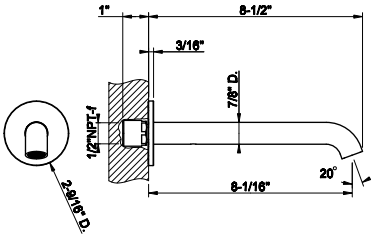

66104

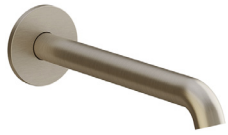

Wall-mounted washbasin spout only
- Custom length MIN3-9/16” - MAX11-13/16”
- 1/2” connections
- Drain not included - See DRAINS section
- Requires mixercontrol
- Max flow rate 1.2 GPM.

031	Chrome	801	720	Nickel PVD	1.185
275	Matte Cipria	1.080	706	Black Metal PVD	1.185
273	Matte Greige	1.080	707	Black Metal Br. PVD	1.265
277	Glossy Ocra	1.265	708	Copper Br. PVD	1.265
278	Glossy Coral	1.265	726	Warm Bronze Br. PVD	1.265
276	Matte Agave	1.080	727	Brass Br. PVD	1.265
149	Finox Br. Nickel	1.080	845	Dark Bronze	1.265
299	Matte Black	1.080			

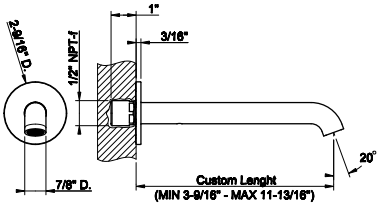

63399



Ceiling-mounted washbasin spout only
- Spout length 63”
- Drain not included - See DRAINS section
- Requires mixer control
- Maxflow rate 1.2 gpm

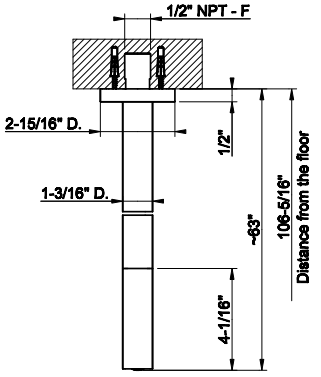

031	Chrome	1.777	030	Copper PVD	2.631
275	Matte Cipria	2.279	708	Copper Br. PVD	2.806
273	Matte Greige	2.279	735	Warm Bronze PVD	2.631
277	Glossy Ocra	2.666	726	Warm Bronze Br. PVD	2.806
278	Glossy Coral	2.666	710	Brass PVD	2.631
276	Matte Agave	2.279	727	Brass Br. PVD	2.806
149	Finox Br. Nickel	2.399	246	Gold PVD	2.986
299	Matte Black	2.399	716	Gold Br. PVD	2.986
720	Nickel PVD	2.631	187	Aged Bronze	2.806
706	Black Metal PVD	2.631	713	Antique Brass	2.806
707	Black Metal Br. PVD	2.806	845	Dark Bronze	2.666

HABITO UNITO

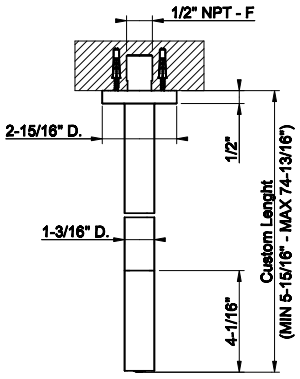

63499

Ceiling-mounted washbasin spout only
- Custom length: Minimum 5-15/16" - Maximum 74-13/16"
- Drain not included - See DRAINS section
- Requires mixer control
- Max flow rate 1.2 gpm



031	Chrome	2.548	030	Copper PVD	3.769
275	Matte Cipria	3.439	708	Copper Br. PVD	4.022
273	Matte Greige	3.439	735	Warm Bronze PVD	3.769
277	Glossy Ocra	3.439	726	Warm Bronze Br. PVD	4.022
278	Glossy Coral	3.439	710	Brass PVD	3.769
276	Matte Agave	3.439	727	Brass Br. PVD	4.022
149	Finox Br. Nickel	3.439	246	Gold PVD	4.281
299	Matte Black	3.439	716	Gold Br. PVD	4.281
720	Nickel PVD	3.769	187	Aged Bronze	4.022
706	Black Metal PVD	3.769	713	Antique Brass	4.022
707	Black Metal Br. PVD	4.022	845	Dark Bronze	4.022

54055+70099

54055

Wall-mounted Basin/bath mixer rough valve. One exit

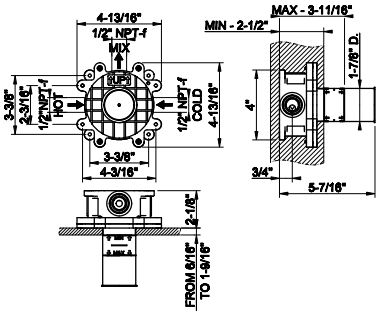

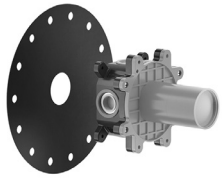

239	Steel Br.	563

70099

TRIM PARTS ONLY Wall-mounted washbasin mixer control UNITO
- 1/2" connections
- Drain not included - See DRAINS section
- Requires in-wallrough valve 54055

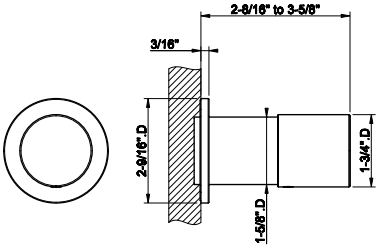



031	Chrome	483	735	Warm Bronze PVD	716
149	Finox Br. Nickel	654	726	Warm Bronze Br. PVD	763
299	Matte Black	654	710	Brass PVD	716
706	Black Metal PVD	716	727	Brass Br. PVD	763
707	Black Metal Br. PVD	763	845	Dark Bronze	763
708	Copper Br. PVD	763			



48189

Floor-mounted tub filler in-floor rough valve

031	Chrome	847

48189+70028

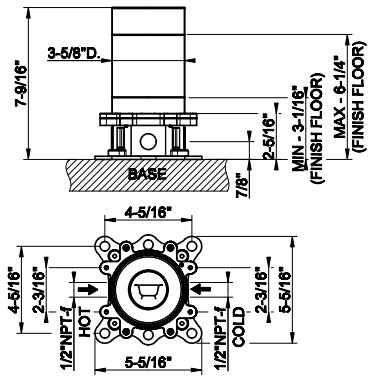



70028

TRIM PARTS ONLY Floor-mounted tub filler UNITO
- Handshower
- Diverter
- Spout projection 10-1/4”
- Requires in-floor rough valve 48189
- Handshower max flow rate 1.75 GPM
- Spout mixed flow rate 6 GPM at 60 PSI.

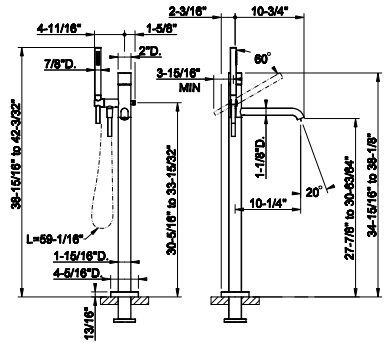

031	Chrome	4.124	735	Warm Bronze PVD	6.104
149	Finox Br. Nickel	5.569	726	Warm Bronze Br. PVD	6.515
299	Matte Black	5.569	710	Brass PVD	6.104
706	Black Metal PVD	6.104	727	Brass Br. PVD	6.515
707	Black Metal Br. PVD	6.515	845	Dark Bronze	6.515
708	Copper Br. PVD	6.515			

54139+70038

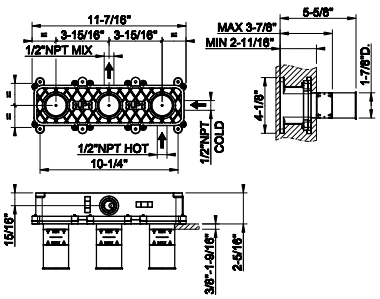

54139

Wall-mounted bath mixer control rough valve
- 1/2" connections
- Non positive shut off



239	Steel Br.	1.087

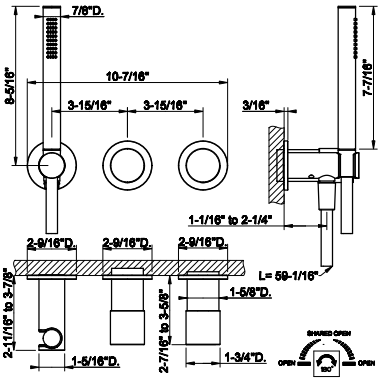

70038

TRIM PARTS ONLY. Wall-mounted bath mixer control. UNITO
- Handshower
- Single backplate
- Two-way diverter
- Water outlet
- Handshower max flow rate 1.75 GPM



031	Chrome	1.645	735	Warm Bronze PVD	2.435
149	Finox Br. Nickel	2.222	726	Warm Bronze Br. PVD	2.599
299	Matte Black	2.222	710	Brass PVD	2.435
706	Black Metal PVD	2.435	727	Brass Br. PVD	2.599
707	Black Metal Br. PVD	2.599	845	Dark Bronze	2.599
708	Copper Br. PVD	2.599			

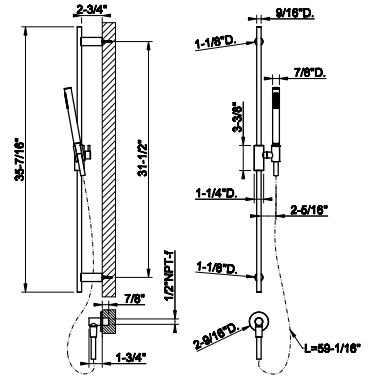

70042

Handshower and adjustable sliding rail set. UNITO
- Adjustable bar
- Adjustable hook
- 59" flex hose
- Wall elbow
- Max flow rate 1.75 GPM



031	Chrome	1.596	735	Warm Bronze PVD	2.363
149	Finox Br. Nickel	2.154	726	Warm Bronze Br. PVD	2.522
299	Matte Black	2.154	710	Brass PVD	2.363
720	Nickel PVD	2.363	727	Brass Br. PVD	2.522
706	Black Metal PVD	2.363	187	Aged Bronze	2.522
707	Black Metal Br. PVD	2.522	713	Antique Brass	2.522
030	Copper PVD	2.363	845	Dark Bronze	2.522
708	Copper Br. PVD	2.522			



HABITO
TRAME

70301



Single lever washbasin mixer with pop-up assembly. TRAME
- Spout projection 5-1/8”
- Height 7-1/2”
- 1-1/4” D. pop-up drain and flexible hoses with 9/16” – 24 UNEF connections.
- Max flow rate 1.2 GPM

031	Chrome	1.048	735	Warm Bronze PVD	1.553
149	Finox Br. Nickel	1.415	726	Warm Bronze Br. PVD	1.658
706	Black Metal PVD	1.553	710	Brass PVD	1.553
707	Black Metal Br. PVD	1.658	727	Brass Br. PVD	1.658
708	Copper Br. PVD	1.658			

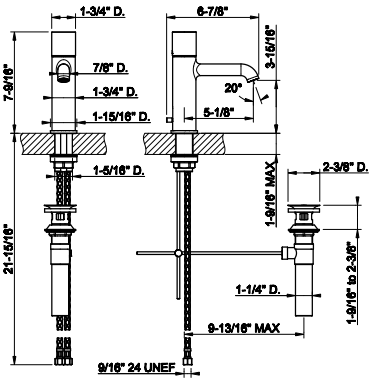

70302



Single lever washbasin mixer without pop-up assembly. TRAME
- Spout projection 5-1/8
- Height 7-1/2”
- Drain not included – see DRAINS section
- Max flow rate 1.2 GPM
- Flexible hoses with 9/16” – 24 UNEF connections.

031	Chrome	961	735	Warm Bronze PVD	1.423
149	Finox Br. Nickel	1.298	726	Warm Bronze Br. PVD	1.517
706	Black Metal PVD	1.423	710	Brass PVD	1.423
707	Black Metal Br. PVD	1.517	727	Brass Br. PVD	1.517
708	Copper Br. PVD	1.517			

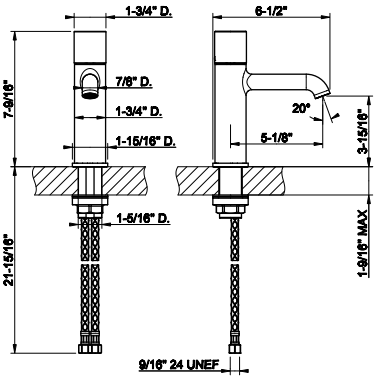

70305



Medium single lever washbasin mixer with pop-up assembly. TRAME
- Spout projection 6-7/16”
- Height 10-1/2”
- 1-1/4” pop up drainand Flexible hoses with 9/16” – 24 UNEF connections.
- Max flow rate 1.2 GPM

031	Chrome	1.223	735	Warm Bronze PVD	1.811
149	Finox Br. Nickel	1.653	726	Warm Bronze Br. PVD	1.932
706	Black Metal PVD	1.811	710	Brass PVD	1.811
707	Black Metal Br. PVD	1.932	727	Brass Br. PVD	1.932
708	Copper Br. PVD	1.932			

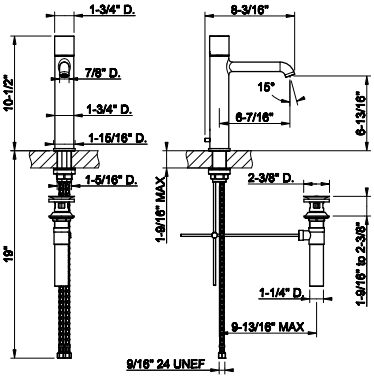

70306



Medium single lever washbasin mixer without pop-up assembly. TRAME
- Spout projection 6-7/16”
- Height 10-1/2”
- Drain not included – see DRAINS section
- Max flow rate 1.2 GPM
- Flexible hoses with 9/16” – 24 UNEF connections.

031	Chrome	1.136	735	Warm Bronze PVD	1.681
149	Finox Br. Nickel	1.532	726	Warm Bronze Br. PVD	1.796
706	Black Metal PVD	1.681	710	Brass PVD	1.681
707	Black Metal Br. PVD	1.796	727	Brass Br. PVD	1.796
708	Copper Br. PVD	1.796			

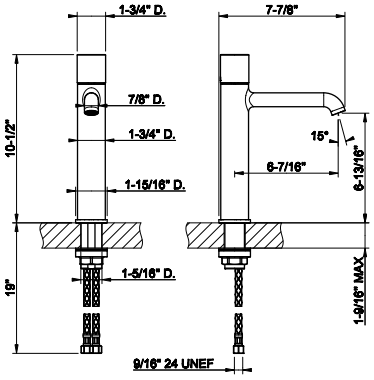

HABITO TRAME

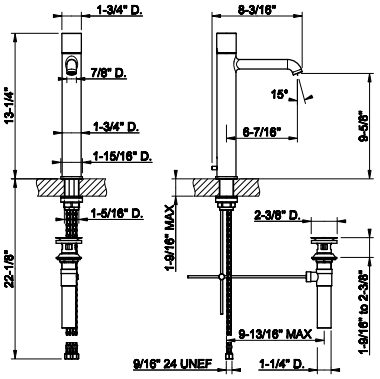

70303

Tall single lever washbasin mixer with pop-up assembly. TRAME
- Spout projection 6-7/16”
- Height 13-1/4”
- 1-1/4” D. pop-up drainand flexible hoses with 9/16” – 24UNEF connections
- Max flow rate 1.2 GPM



031	Chrome	1.321	735	Warm Bronze PVD	1.955
149	Finox Br. Nickel	1.783	726	Warm Bronze Br. PVD	2.088
706	Black Metal PVD	1.955	710	Brass PVD	1.955
707	Black Metal Br. PVD	2.088	727	Brass Br. PVD	2.088
708	Copper Br. PVD	2.088			

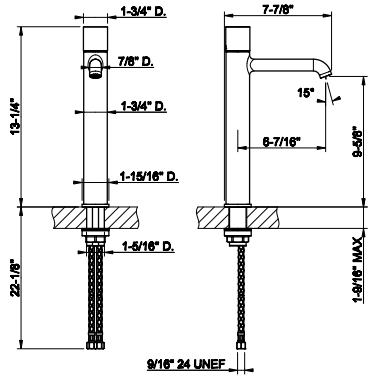

70304

Tall single lever washbasin mixer without pop-up assembly. TRAME
- Spout projection 6-7/16”
- Height 13-1/4”
- Drain not included –see DRAINS section
- Max flow rate 1.2 GPM
- Flexible hoses with 9/16” – 24 UNEF connections.



031	Chrome	1.233	735	Warm Bronze PVD	1.826
149	Finox Br. Nickel	1.666	726	Warm Bronze Br. PVD	1.947
706	Black Metal PVD	1.826	710	Brass PVD	1.826
707	Black Metal Br. PVD	1.947	727	Brass Br. PVD	1.947
708	Copper Br. PVD	1.947			

54197+70388

54197

Wall-mounted washbasin mixer rough valve
- Drain not included - See DRAINS section

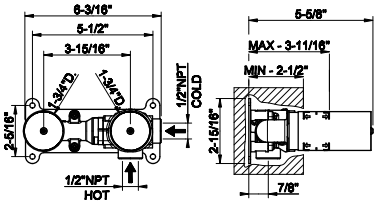



239	Steel Br.	809

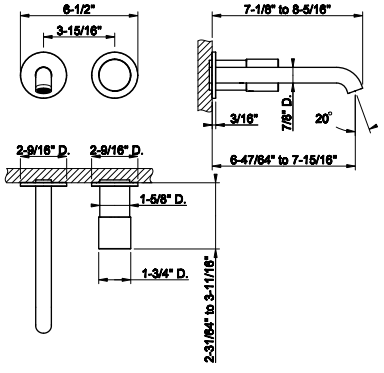

70388

TRIM PARTS ONLY Wall-mounted washbasin mixer trim. TRAME
- Spout projection 6-47/64” to 7-15/16”
- Drain not included - See DRAINSsection
- Requires in-wall rough valve 54197
- Max flow rate 1.2 GPM
- ADA compliant



031	Chrome	948	735	Warm Bronze PVD	1.402
149	Finox Br. Nickel	1.280	726	Warm Bronze Br. PVD	1.498
706	Black Metal PVD	1.402	710	Brass PVD	1.402
707	Black Metal Br. PVD	1.498	727	Brass Br. PVD	1.498
708	Copper Br. PVD	1.498			

66102

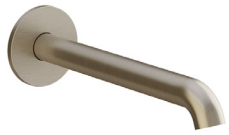

Wall-mounted washbasin spout only
- Projection 8-1/16”
- 1/2” connections
- Drain not included - See DRAINS section
- Requires mixercontrol
- Max flow rate 1.2 GPM.

031	Chrome	401	720	Nickel PVD	593
275	Matte Cipria	541	706	Black Metal PVD	593
273	Matte Greige	541	707	Black Metal Br. PVD	633
277	Glossy Ocra	633	708	Copper Br. PVD	633
278	Glossy Coral	633	726	Warm Bronze Br. PVD	633
276	Matte Agave	541	727	Brass Br. PVD	633
149	Finox Br. Nickel	541	845	Dark Bronze	633
299	Matte Black	541			

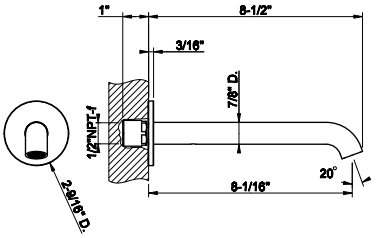

66104

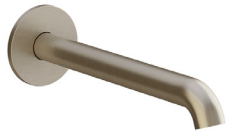

Wall-mounted washbasin spout only
- Custom length MIN3-9/16” - MAX11-13/16”
- 1/2” connections
- Drain not included - See DRAINS section
- Requires mixercontrol
- Max flow rate 1.2 GPM.

031	Chrome	801	720	Nickel PVD	1.185
275	Matte Cipria	1.080	706	Black Metal PVD	1.185
273	Matte Greige	1.080	707	Black Metal Br. PVD	1.265
277	Glossy Ocra	1.265	708	Copper Br. PVD	1.265
278	Glossy Coral	1.265	726	Warm Bronze Br. PVD	1.265
276	Matte Agave	1.080	727	Brass Br. PVD	1.265
149	Finox Br. Nickel	1.080	845	Dark Bronze	1.265
299	Matte Black	1.080			

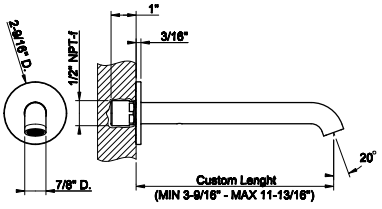

63399



Ceiling-mounted washbasin spout only
- Spout length 63”
- Drain not included - See DRAINS section
- Requires mixer control
- Maxflow rate 1.2 gpm

031	Chrome	1.777	030	Copper PVD	2.631
275	Matte Cipria	2.279	708	Copper Br. PVD	2.806
273	Matte Greige	2.279	735	Warm Bronze PVD	2.631
277	Glossy Ocra	2.666	726	Warm Bronze Br. PVD	2.806
278	Glossy Coral	2.666	710	Brass PVD	2.631
276	Matte Agave	2.279	727	Brass Br. PVD	2.806
149	Finox Br. Nickel	2.399	246	Gold PVD	2.986
299	Matte Black	2.399	716	Gold Br. PVD	2.986
720	Nickel PVD	2.631	187	Aged Bronze	2.806
706	Black Metal PVD	2.631	713	Antique Brass	2.806
707	Black Metal Br. PVD	2.806	845	Dark Bronze	2.666

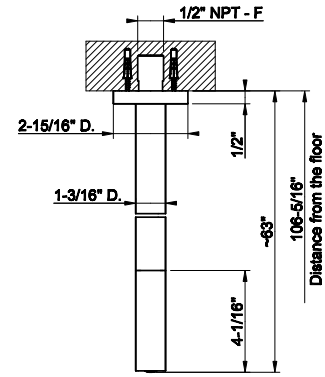

HABITO TRAME

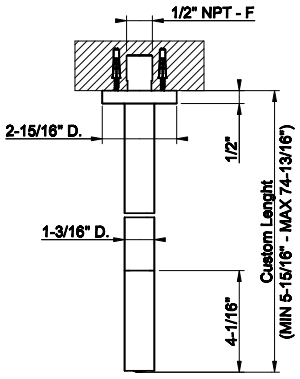

63499

Ceiling-mounted washbasin spout only
- Custom length: Minimum 5-15/16" - Maximum 74-13/16"
- Drain not included - See DRAINS section
- Requires mixer control
- Max flow rate 1.2 gpm



031	Chrome	2.548	030	Copper PVD	3.769
275	Matte Cipria	3.439	708	Copper Br. PVD	4.022
273	Matte Greige	3.439	735	Warm Bronze PVD	3.769
277	Glossy Ocra	3.439	726	Warm Bronze Br. PVD	4.022
278	Glossy Coral	3.439	710	Brass PVD	3.769
276	Matte Agave	3.439	727	Brass Br. PVD	4.022
149	Finox Br. Nickel	3.439	246	Gold PVD	4.281
299	Matte Black	3.439	716	Gold Br. PVD	4.281
720	Nickel PVD	3.769	187	Aged Bronze	4.022
706	Black Metal PVD	3.769	713	Antique Brass	4.022
707	Black Metal Br. PVD	4.022	845	Dark Bronze	4.022

54055+70399

54055

Wall-mounted Basin/bath mixer rough valve. One exit

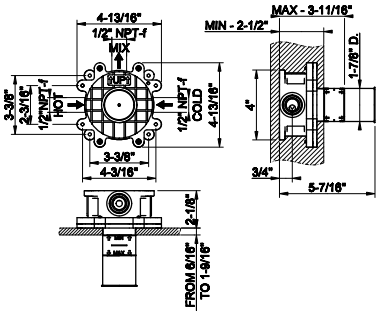

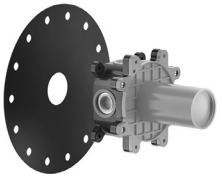

239	Steel Br.	563

70399

TRIM PARTS ONLY Wall-mounted washbasin mixer control TRAME
- 1/2" connections
- Drain not included - See DRAINS section
- Requires in-wallrough valve 54055

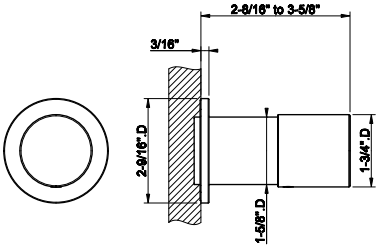



031	Chrome	548	735	Warm Bronze PVD	814
149	Finox Br. Nickel	741	726	Warm Bronze Br. PVD	868
706	Black Metal PVD	814	710	Brass PVD	814
707	Black Metal Br. PVD	868	727	Brass Br. PVD	868
708	Copper Br. PVD	868			



48189

Floor-mounted tub filler in-floor rough valve

031	Chrome	847

48189+70328

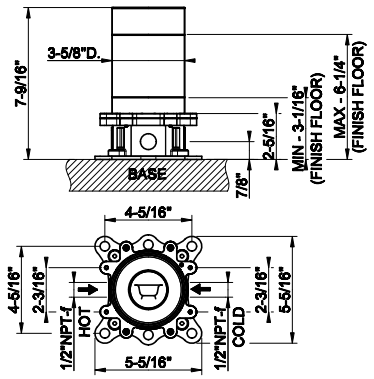



70328

TRIM PARTS ONLY Floor-mounted tub filler TRAME
- Handshower
- Diverter
- Spout projection 10-1/4”
- Requires in-floor rough valve 48189
- Handshower max flow rate 1.75 GPM
- Spout mixed flow rate 6 GPM at 60 PSI.

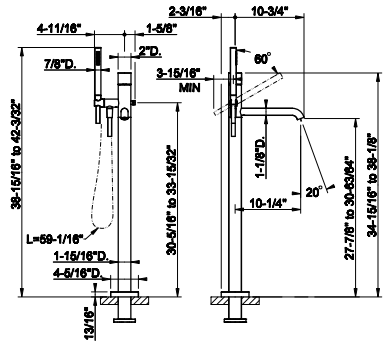

031	Chrome	4.216	735	Warm Bronze PVD	6.240
149	Finox Br. Nickel	5.693	726	Warm Bronze Br. PVD	6.662
706	Black Metal PVD	6.240	710	Brass PVD	6.240
707	Black Metal Br. PVD	6.662	727	Brass Br. PVD	6.662
708	Copper Br. PVD	6.662			

HABITO TRAME

54139+70338

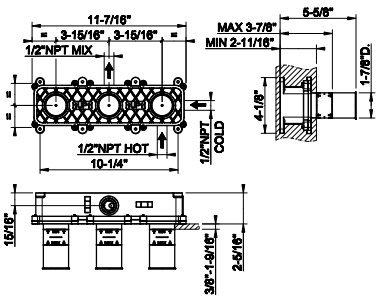

54139

Wall-mounted bath mixer control rough valve
- 1/2” connections
- Non positive shut off



239	Steel Br.	1.087

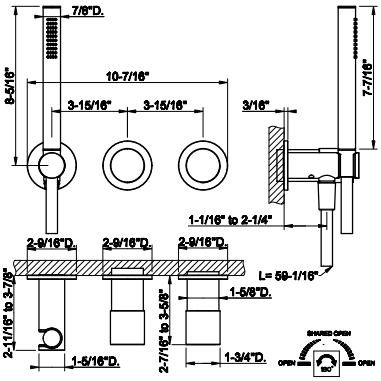

70338

TRIM PARTS ONLY. Wall-mounted bath mixer control. TRAME
- Handshower
- Single backplate
- Two-way diverter
- Water outlet
- Handshower max flow rate 1.75 GPM



031	Chrome	1.711	735	Warm Bronze PVD	2.533
149	Finox Br. Nickel	2.310	726	Warm Bronze Br. PVD	2.702
706	Black Metal PVD	2.533	710	Brass PVD	2.533
707	Black Metal Br. PVD	2.702	727	Brass Br. PVD	2.702
708	Copper Br. PVD	2.702			

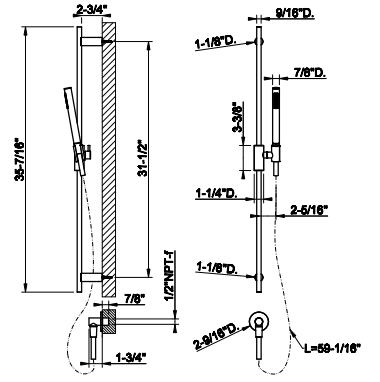

70342

Handshower and adjustable sliding rail set. TRAME
- Adjustable bar
- Adjustable hook
- 59” Flex hose
- Wall elbow
- Max flow rate 1.75GPM. Insert in desired finish included.



031	Chrome	1.696	735	Warm Bronze PVD	2.510
149	Finox Br. Nickel	2.290	726	Warm Bronze Br. PVD	2.680
706	Black Metal PVD	2.510	710	Brass PVD	2.510
707	Black Metal Br. PVD	2.680	727	Brass Br. PVD	2.680
708	Copper Br. PVD	2.680			


GESSI
HABITO
INTRECCIO

70101



Single lever washbasin mixer with pop-up assembly. INTRECCIO
- Spout projection 5-1/8”
- Height 7-1/2”
- 1-1/4” D. pop-up drain and flexible hoses with 9/16” – 24 UNEF connections.
- Max flow rate 1.2 GPM

031	Chrome	1.048	735	Warm Bronze PVD	1.553
149	Finox Br. Nickel	1.415	726	Warm Bronze Br. PVD	1.658
299	Matte Black	1.415	710	Brass PVD	1.553
706	Black Metal PVD	1.553	727	Brass Br. PVD	1.658
707	Black Metal Br. PVD	1.658	845	Dark Bronze	1.658
708	Copper Br. PVD	1.658			

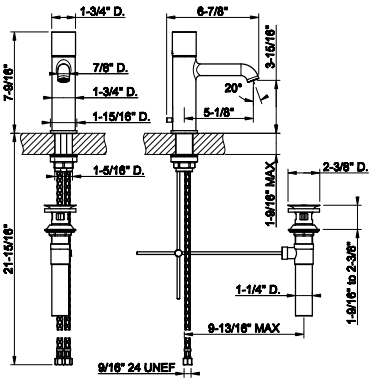

70102



Single lever washbasin mixer without pop-up assembly. INTRECCIO
- Spout projection 5-1/8
- Height 7-1/2”
- Drain not included – seeDRAINS section
- Max flow rate 1.2 GPM
- Flexible hoses with 9/16” – 24 UNEF connections.

031	Chrome	961	735	Warm Bronze PVD	1.423
149	Finox Br. Nickel	1.298	726	Warm Bronze Br. PVD	1.517
299	Matte Black	1.298	710	Brass PVD	1.423
706	Black Metal PVD	1.423	727	Brass Br. PVD	1.517
707	Black Metal Br. PVD	1.517	845	Dark Bronze	1.517
708	Copper Br. PVD	1.517			

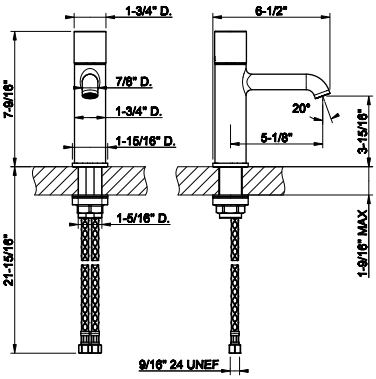

70105



Medium single lever washbasin mixer with pop-up assembly. INTRECCIO
- Spout projection 6-7/16”
- Height 10-1/2”
- 1-1/4” pop up drain and Flexible hoses with 9/16” – 24 UNEF connections.
- Max flow rate 1.2 GPM

031	Chrome	1.223	735	Warm Bronze PVD	1.811
149	Finox Br. Nickel	1.653	726	Warm Bronze Br. PVD	1.932
299	Matte Black	1.653	710	Brass PVD	1.811
706	Black Metal PVD	1.811	727	Brass Br. PVD	1.932
707	Black Metal Br. PVD	1.932	845	Dark Bronze	1.932
708	Copper Br. PVD	1.932			

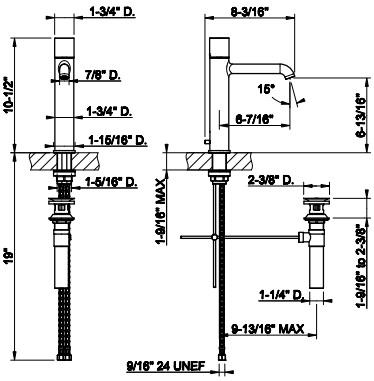

70106



Medium single lever washbasin mixer without pop-up assembly. INTRECCIO
- Spout projection 6-7/16”
- Height 10-1/2”
- Drain not included – see DRAINS section
- Max flow rate 1.2 GPM
- Flexible hoses with 9/16” – 24 UNEF connections.

031	Chrome	1.136	735	Warm Bronze PVD	1.681
149	Finox Br. Nickel	1.532	726	Warm Bronze Br. PVD	1.796
299	Matte Black	1.532	710	Brass PVD	1.681
706	Black Metal PVD	1.681	727	Brass Br. PVD	1.796
707	Black Metal Br. PVD	1.796	845	Dark Bronze	1.796
708	Copper Br. PVD	1.796			

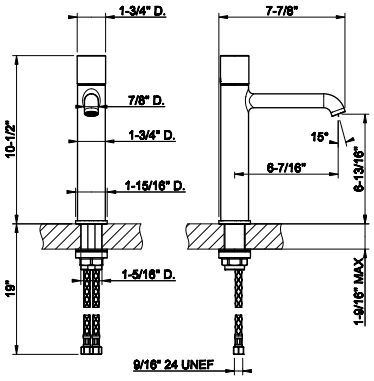

HABITO INTRECCIO

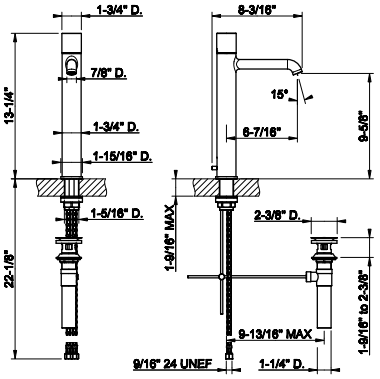

70103

Tall single lever washbasin mixer with pop-up assembly.
INTRECCIO
- Spout projection 6-7/16”
- Height 13-1/4”
- 1-1/4” D. pop-up drain and flexible hoses with 9/16” – 24UNEF connections
- Max flow rate 1.2 GPM

031	Chrome	1.321	735	Warm Bronze PVD	1.955
149	Finox Br. Nickel	1.783	726	Warm Bronze Br. PVD	2.088
299	Matte Black	1.783	710	Brass PVD	1.955
706	Black Metal PVD	1.955	727	Brass Br. PVD	2.088
707	Black Metal Br. PVD	2.088	845	Dark Bronze	2.088
708	Copper Br. PVD	2.088			



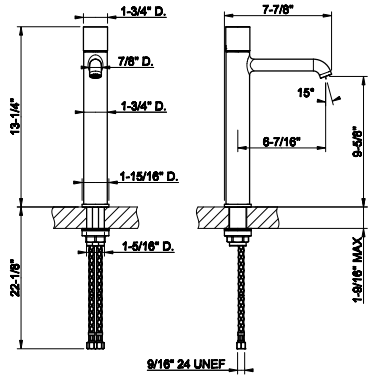

70104

Tall single lever washbasin mixer without pop-up assembly.
INTRECCIO
- Spout projection 6-7/16”
- Height 13-1/4”
- Drain not included – see DRAINS section
- Max flow rate 1.2 GPM
- Flexible hoses with 9/16” – 24 UNEF connections.

031	Chrome	1.233	735	Warm Bronze PVD	1.826
149	Finox Br. Nickel	1.666	726	Warm Bronze Br. PVD	1.947
299	Matte Black	1.666	710	Brass PVD	1.826
706	Black Metal PVD	1.826	727	Brass Br. PVD	1.947
707	Black Metal Br. PVD	1.947	845	Dark Bronze	1.947
708	Copper Br. PVD	1.947			



54197+70188

54197

Wall-mounted washbasin mixer rough valve
- Drain not included - See DRAINS section

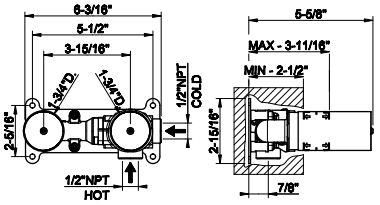



239	Steel Br.	809

70188

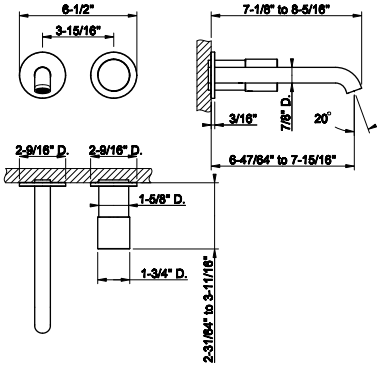

TRIM PARTS ONLY Wall-mounted washbasin mixer trim.
INTRECCIO
- Spout projection 6-47/64” to 7-15/16”
- Drain not included - See DRAINS section
- Requires in-wall rough valve 54197
- Max flow rate 1.2 GPM
- ADA compliant

031	Chrome	948	735	Warm Bronze PVD	1.402
149	Finox Br. Nickel	1.280	726	Warm Bronze Br. PVD	1.498
299	Matte Black	1.280	710	Brass PVD	1.402
706	Black Metal PVD	1.402	727	Brass Br. PVD	1.498
707	Black Metal Br. PVD	1.498	845	Dark Bronze	1.498
708	Copper Br. PVD	1.498			



66102

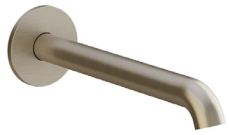

Wall-mounted washbasin spout only
- Projection 8-1/16”
- 1/2” connections
- Drain not included - See DRAINS section
- Requires mixercontrol
- Max flow rate 1.2 GPM.

031	Chrome	401	720	Nickel PVD	593
275	Matte Cipria	541	706	Black Metal PVD	593
273	Matte Greige	541	707	Black Metal Br. PVD	633
277	Glossy Ocra	633	708	Copper Br. PVD	633
278	Glossy Coral	633	726	Warm Bronze Br. PVD	633
276	Matte Agave	541	727	Brass Br. PVD	633
149	Finox Br. Nickel	541	845	Dark Bronze	633
299	Matte Black	541			

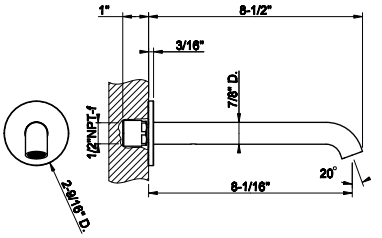

66104

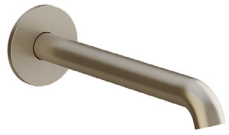

Wall-mounted washbasin spout only
- Custom length MIN3-9/16” - MAX11-13/16”
- 1/2” connections
- Drain not included - See DRAINS section
- Requires mixercontrol
- Max flow rate 1.2 GPM.

031	Chrome	801	720	Nickel PVD	1.185
275	Matte Cipria	1.080	706	Black Metal PVD	1.185
273	Matte Greige	1.080	707	Black Metal Br. PVD	1.265
277	Glossy Ocra	1.265	708	Copper Br. PVD	1.265
278	Glossy Coral	1.265	726	Warm Bronze Br. PVD	1.265
276	Matte Agave	1.080	727	Brass Br. PVD	1.265
149	Finox Br. Nickel	1.080	845	Dark Bronze	1.265
299	Matte Black	1.080			

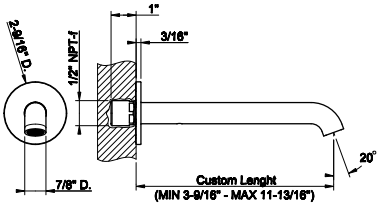

63399



Ceiling-mounted washbasin spout only
- Spout length 63”
- Drain not included - See DRAINS section
- Requires mixer control
- Maxflow rate 1.2 gpm

031	Chrome	1.777	030	Copper PVD	2.631
275	Matte Cipria	2.279	708	Copper Br. PVD	2.806
273	Matte Greige	2.279	735	Warm Bronze PVD	2.631
277	Glossy Ocra	2.666	726	Warm Bronze Br. PVD	2.806
278	Glossy Coral	2.666	710	Brass PVD	2.631
276	Matte Agave	2.279	727	Brass Br. PVD	2.806
149	Finox Br. Nickel	2.399	246	Gold PVD	2.986
299	Matte Black	2.399	716	Gold Br. PVD	2.986
720	Nickel PVD	2.631	187	Aged Bronze	2.806
706	Black Metal PVD	2.631	713	Antique Brass	2.806
707	Black Metal Br. PVD	2.806	845	Dark Bronze	2.666

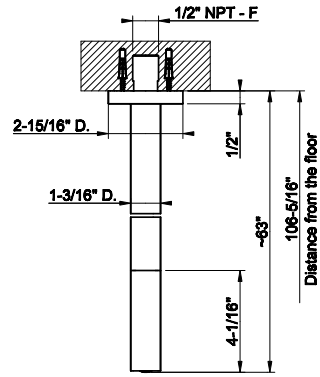

HABITO INTRECCIO

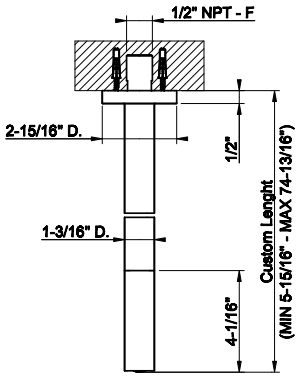

63499

Ceiling-mounted washbasin spout only
- Custom length: Minimum 5-15/16" - Maximum 74-13/16"
- Drain not included - See DRAINS section
- Requires mixer control
- Max flow rate 1.2 gpm



031	Chrome	2.548	030	Copper PVD	3.769
275	Matte Cipria	3.439	708	Copper Br. PVD	4.022
273	Matte Greige	3.439	735	Warm Bronze PVD	3.769
277	Glossy Ocra	3.439	726	Warm Bronze Br. PVD	4.022
278	Glossy Coral	3.439	710	Brass PVD	3.769
276	Matte Agave	3.439	727	Brass Br. PVD	4.022
149	Finox Br. Nickel	3.439	246	Gold PVD	4.281
299	Matte Black	3.439	716	Gold Br. PVD	4.281
720	Nickel PVD	3.769	187	Aged Bronze	4.022
706	Black Metal PVD	3.769	713	Antique Brass	4.022
707	Black Metal Br. PVD	4.022	845	Dark Bronze	4.022

54055+70199

54055

Wall-mounted Basin/bath mixer rough valve. One exit

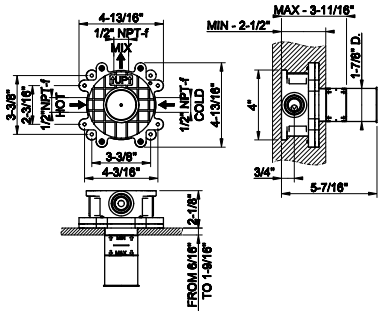

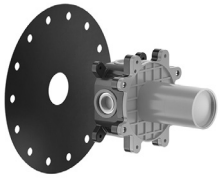

239	Steel Br.	563

70199

TRIM PARTS ONLY Wall-mounted washbasin mixer control INTRECCIO
- 1/2" connections
- Drain not included - See DRAINS section
- Requires in-wallrough valve 54055

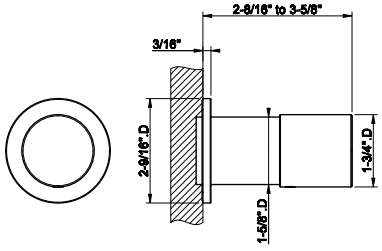



031	Chrome	548	735	Warm Bronze PVD	814
149	Finox Br. Nickel	741	726	Warm Bronze Br. PVD	868
299	Matte Black	741	710	Brass PVD	814
706	Black Metal PVD	814	727	Brass Br. PVD	868
707	Black Metal Br. PVD	868	845	Dark Bronze	868
708	Copper Br. PVD	868			



48189

Floor-mounted tub filler in-floor rough valve

031	Chrome	847

48189+70128

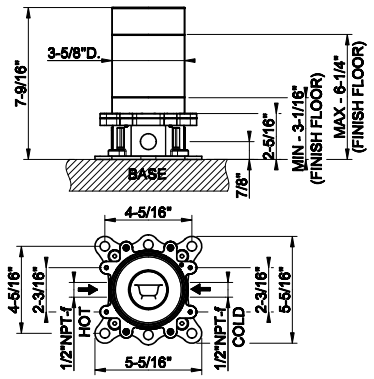



70128

TRIM PARTS ONLY Floor-mounted tub filler INTRECCIO
- Handshower
- Diverter
- Spout projection 10-1/4”
- Requires in-floor rough valve 48189
- Handshower max flow rate 1.75 GPM
- Spout mixed flow rate 6 GPM at 60 PSI.

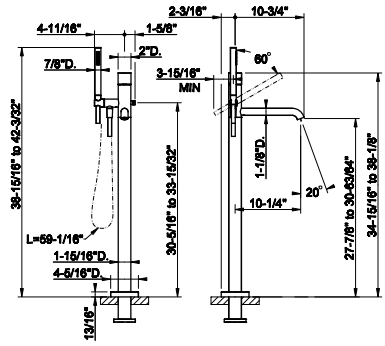

031	Chrome	4.216	735	Warm Bronze PVD	6.240
149	Finox Br. Nickel	5.693	726	Warm Bronze Br. PVD	6.662
299	Matte Black	5.693	710	Brass PVD	6.240
706	Black Metal PVD	6.240	727	Brass Br. PVD	6.662
707	Black Metal Br. PVD	6.662	845	Dark Bronze	6.662
708	Copper Br. PVD	6.662			

HABITO INTRECCIO

54139+70138

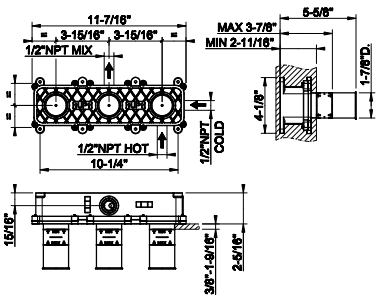

54139

Wall-mounted bath mixer control rough valve
- 1/2” connections
- Non positive shut off



239	Steel Br.	1.087

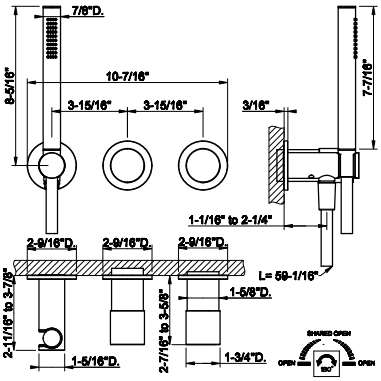

70138

TRIM PARTS ONLY. Wall-mounted bath mixer control. INTRECCIO
- Handshower
- Single backplate
- Two-way diverter
- Water outlet
- Handshower max flow rate 1.75 GPM



031	Chrome	1.711	735	Warm Bronze PVD	2.533
149	Finox Br. Nickel	2.310	726	Warm Bronze Br. PVD	2.702
299	Matte Black	2.310	710	Brass PVD	2.533
706	Black Metal PVD	2.533	727	Brass Br. PVD	2.702
707	Black Metal Br. PVD	2.702	845	Dark Bronze	2.702
708	Copper Br. PVD	2.702			

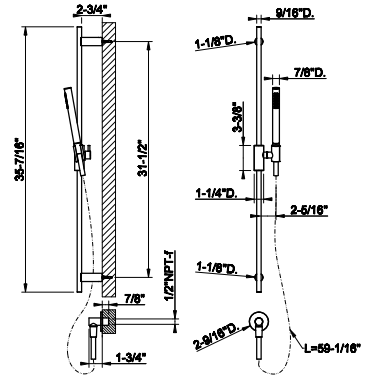

70142

Handshower and adjustable sliding rail set. INTRECCIO
- Adjustable bar
- Adjustable hook
- 59” Flex hose
- Wall elbow
- Max flowrate 1.75GPM. Insert in desired finish included.



031	Chrome	1.696	735	Warm Bronze PVD	2.510
149	Finox Br. Nickel	2.290	726	Warm Bronze Br. PVD	2.680
299	Matte Black	2.290	710	Brass PVD	2.510
706	Black Metal PVD	2.510	727	Brass Br. PVD	2.680
707	Black Metal Br. PVD	2.680	845	Dark Bronze	2.680
708	Copper Br. PVD	2.680			


GESSI
HABITO
RIGATO

70501



Single lever washbasin mixer with pop-up assembly. RIGATO
- Spout projection 5-1/8”
- Height 7-1/2”
- 1-1/4” D. pop-up drain and flexible hoses with 9/16” – 24 UNEF connections.
- Max flow rate 1.2 GPM

031	Chrome	1.048	735	Warm Bronze PVD	1.553
149	Finox Br. Nickel	1.415	726	Warm Bronze Br. PVD	1.658
299	Matte Black	1.415	710	Brass PVD	1.553
706	Black Metal PVD	1.553	727	Brass Br. PVD	1.658
707	Black Metal Br. PVD	1.658	845	Dark Bronze	1.658
708	Copper Br. PVD	1.658			

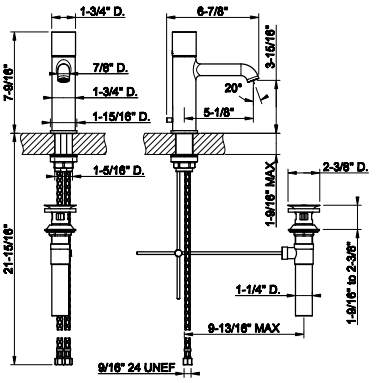

70502



Single lever washbasin mixer without pop-up assembly. RIGATO
- Spout projection 5-1/8
- Height 7-1/2”
- Drain not included – see DRAINS section
- Max flow rate 1.2 GPM
- Flexible hoses with 9/16” – 24 UNEF connections.

031	Chrome	961	735	Warm Bronze PVD	1.423
149	Finox Br. Nickel	1.298	726	Warm Bronze Br. PVD	1.517
299	Matte Black	1.298	710	Brass PVD	1.423
706	Black Metal PVD	1.423	727	Brass Br. PVD	1.517
707	Black Metal Br. PVD	1.517	845	Dark Bronze	1.517
708	Copper Br. PVD	1.517			

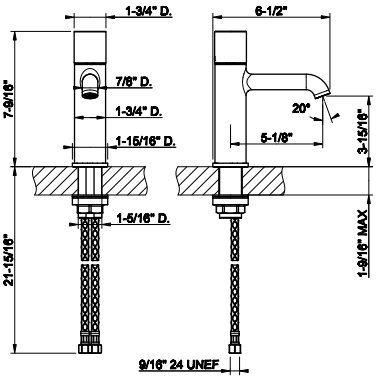

70505



Medium single lever washbasin mixer with pop-up assembly. RIGATO
- Spout projection 6-7/16”
- Height 10-1/2”
- 1-1/4” pop up drainand Flexible hoses with 9/16” – 24 UNEF connections.
- Max flow rate 1.2 GPM

031	Chrome	1.223	735	Warm Bronze PVD	1.811
149	Finox Br. Nickel	1.653	726	Warm Bronze Br. PVD	1.932
299	Matte Black	1.653	710	Brass PVD	1.811
706	Black Metal PVD	1.811	727	Brass Br. PVD	1.932
707	Black Metal Br. PVD	1.932	845	Dark Bronze	1.932
708	Copper Br. PVD	1.932			

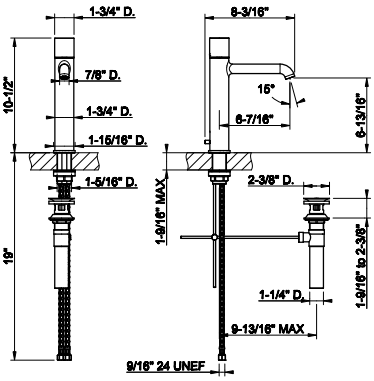

70506



Medium single lever washbasin mixer without pop-up assembly. RIGATO
- Spout projection 6-7/16”
- Height 10-1/2”
- Drain not included – see DRAINS section
- Max flow rate 1.2 GPM
- Flexible hoses with 9/16” – 24 UNEF connections.

031	Chrome	1.136	735	Warm Bronze PVD	1.681
149	Finox Br. Nickel	1.532	726	Warm Bronze Br. PVD	1.796
299	Matte Black	1.532	710	Brass PVD	1.681
706	Black Metal PVD	1.681	727	Brass Br. PVD	1.796
707	Black Metal Br. PVD	1.796	845	Dark Bronze	1.796
708	Copper Br. PVD	1.796			

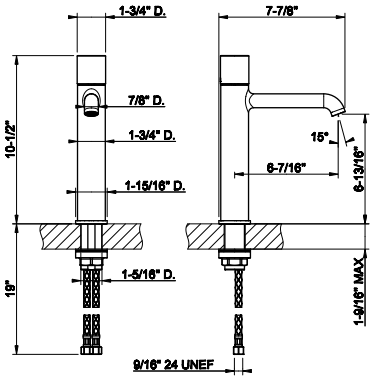

HABITO RIGATO

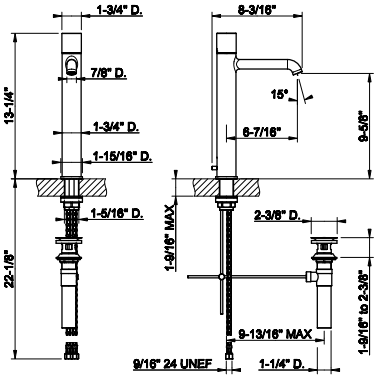

70503

Tall single lever washbasin mixer with pop-up assembly. RIGATO
- Spout projection 6-7/16”
- Height 13-1/4”
- 1-1/4” D. pop-up drain and flexible hoses with 9/16” – 24UNEF connections
- Max flow rate 1.2 GPM

031	Chrome	1.321	735	Warm Bronze PVD	1.955
149	Finox Br. Nickel	1.783	726	Warm Bronze Br. PVD	2.088
299	Matte Black	1.783	710	Brass PVD	1.955
706	Black Metal PVD	1.955	727	Brass Br. PVD	2.088
707	Black Metal Br. PVD	2.088	845	Dark Bronze	2.088
708	Copper Br. PVD	2.088			



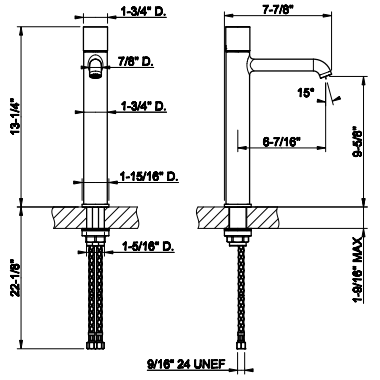

70504

Tall single lever washbasin mixer without pop-up assembly. RIGATO
- Spout projection 6-7/16”
- Height 13-1/4”
- Drain not included –see DRAINS section
- Max flow rate 1.2 GPM
- Flexible hoses with 9/16” – 24 UNEF connections.

031	Chrome	1.233	735	Warm Bronze PVD	1.826
149	Finox Br. Nickel	1.666	726	Warm Bronze Br. PVD	1.947
299	Matte Black	1.666	710	Brass PVD	1.826
706	Black Metal PVD	1.826	727	Brass Br. PVD	1.947
707	Black Metal Br. PVD	1.947	845	Dark Bronze	1.947
708	Copper Br. PVD	1.947			



54197+70588

54197

Wall-mounted washbasin mixer rough valve
- Drain not included - See DRAINS section

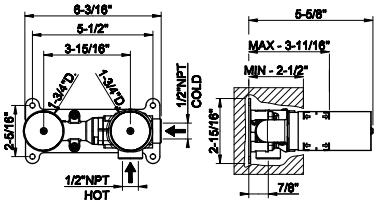



239	Steel Br.	809

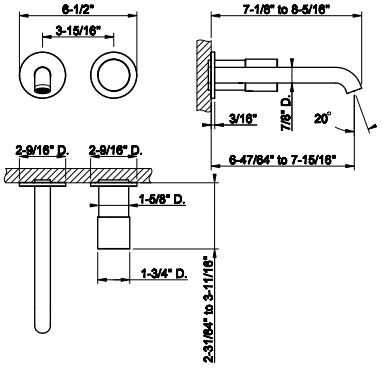

70588

TRIM PARTS ONLY Wall-mounted washbasin mixer trim. RIGATO
- Spout projection 6-47/64” to 7-15/16”
- Drain not included - See DRAINS section
- Requires in-wall rough valve 54197
- Max flow rate 1.2 GPM
- ADA compliant

031	Chrome	948	735	Warm Bronze PVD	1.402
149	Finox Br. Nickel	1.280	726	Warm Bronze Br. PVD	1.498
299	Matte Black	1.280	710	Brass PVD	1.402
706	Black Metal PVD	1.402	727	Brass Br. PVD	1.498
707	Black Metal Br. PVD	1.498	845	Dark Bronze	1.498
708	Copper Br. PVD	1.498			



66102

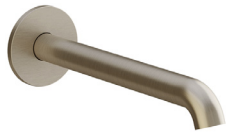

Wall-mounted washbasin spout only
- Projection 8-1/16”
- 1/2” connections
- Drain not included - See DRAINS section
- Requires mixercontrol
- Max flow rate 1.2 GPM.

031	Chrome	401	720	Nickel PVD	593
275	Matte Cipria	541	706	Black Metal PVD	593
273	Matte Greige	541	707	Black Metal Br. PVD	633
277	Glossy Ocra	633	708	Copper Br. PVD	633
278	Glossy Coral	633	726	Warm Bronze Br. PVD	633
276	Matte Agave	541	727	Brass Br. PVD	633
149	Finox Br. Nickel	541	845	Dark Bronze	633
299	Matte Black	541			

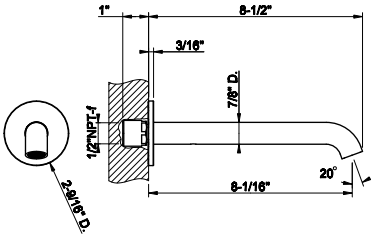

66104

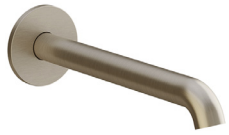

Wall-mounted washbasin spout only
- Custom length MIN3-9/16” - MAX11-13/16”
- 1/2” connections
- Drain not included - See DRAINS section
- Requires mixercontrol
- Max flow rate 1.2 GPM.

031	Chrome	801	720	Nickel PVD	1.185
275	Matte Cipria	1.080	706	Black Metal PVD	1.185
273	Matte Greige	1.080	707	Black Metal Br. PVD	1.265
277	Glossy Ocra	1.265	708	Copper Br. PVD	1.265
278	Glossy Coral	1.265	726	Warm Bronze Br. PVD	1.265
276	Matte Agave	1.080	727	Brass Br. PVD	1.265
149	Finox Br. Nickel	1.080	845	Dark Bronze	1.265
299	Matte Black	1.080			

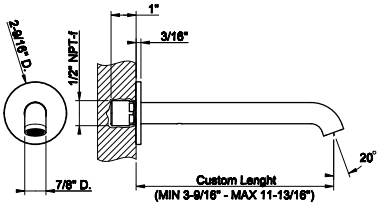

63399



Ceiling-mounted washbasin spout only
- Spout length 63”
- Drain not included - See DRAINS section
- Requires mixer control
- Maxflow rate 1.2 gpm

031	Chrome	1.777	030	Copper PVD	2.631
275	Matte Cipria	2.279	708	Copper Br. PVD	2.806
273	Matte Greige	2.279	735	Warm Bronze PVD	2.631
277	Glossy Ocra	2.666	726	Warm Bronze Br. PVD	2.806
278	Glossy Coral	2.666	710	Brass PVD	2.631
276	Matte Agave	2.279	727	Brass Br. PVD	2.806
149	Finox Br. Nickel	2.399	246	Gold PVD	2.986
299	Matte Black	2.399	716	Gold Br. PVD	2.986
720	Nickel PVD	2.631	187	Aged Bronze	2.806
706	Black Metal PVD	2.631	713	Antique Brass	2.806
707	Black Metal Br. PVD	2.806	845	Dark Bronze	2.666

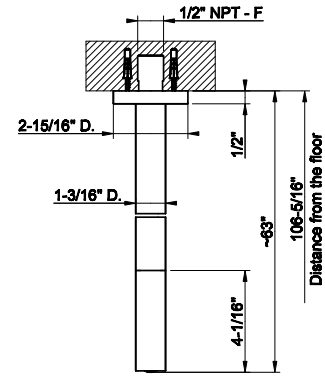

HABITO RIGATO

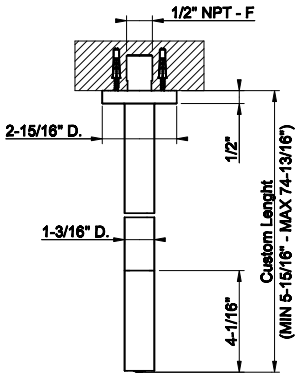

63499

Ceiling-mounted washbasin spout only
- Custom length: Minimum 5-15/16" - Maximum 74-13/16"
- Drain not included - See DRAINS section
- Requires mixer control
- Max flow rate 1.2 gpm



031	Chrome	2.548	030	Copper PVD	3.769
275	Matte Cipria	3.439	708	Copper Br. PVD	4.022
273	Matte Greige	3.439	735	Warm Bronze PVD	3.769
277	Glossy Ocra	3.439	726	Warm Bronze Br. PVD	4.022
278	Glossy Coral	3.439	710	Brass PVD	3.769
276	Matte Agave	3.439	727	Brass Br. PVD	4.022
149	Finox Br. Nickel	3.439	246	Gold PVD	4.281
299	Matte Black	3.439	716	Gold Br. PVD	4.281
720	Nickel PVD	3.769	187	Aged Bronze	4.022
706	Black Metal PVD	3.769	713	Antique Brass	4.022
707	Black Metal Br. PVD	4.022	845	Dark Bronze	4.022

54055+70599

54055

Wall-mounted Basin/bath mixer rough valve. One exit

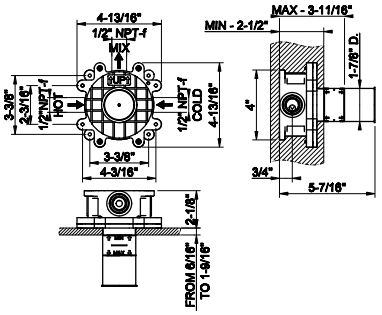

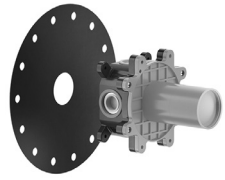

239	Steel Br.	563

70599

TRIM PARTS ONLY Wall-mounted washbasin mixer control RIGATO
- 1/2" connections
- Drain not included - See DRAINS section
- Requiresin-wallrough valve 54055

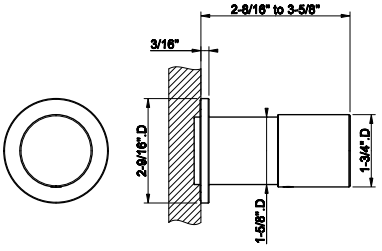



031	Chrome	548	735	Warm Bronze PVD	814
149	Finox Br. Nickel	741	726	Warm Bronze Br. PVD	868
299	Matte Black	741	710	Brass PVD	814
706	Black Metal PVD	814	727	Brass Br. PVD	868
707	Black Metal Br. PVD	868	845	Dark Bronze	868
708	Copper Br. PVD	868			



48189

Floor-mounted tub filler in-floor rough valve

031	Chrome	847

48189+70528

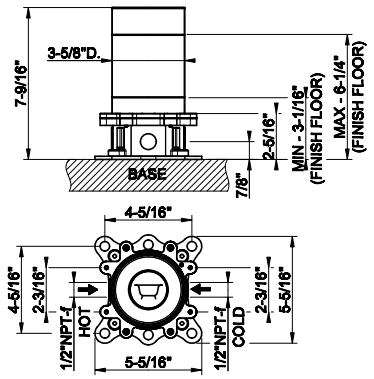



70528

TRIM PARTS ONLY Floor-mounted tub filler RIGATO
- Handshower
- Diverter
- Spout projection 10-1/4”
- Requires in-floor rough valve48189
- Handshower max flow rate 1.75 GPM
- Spout mixed flow rate 6 GPM at 60 PSI.

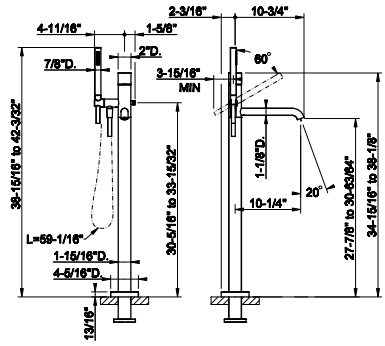

031	Chrome	4.216	735	Warm Bronze PVD	6.240
149	Finox Br. Nickel	5.693	726	Warm Bronze Br. PVD	6.662
299	Matte Black	5.693	710	Brass PVD	6.240
706	Black Metal PVD	6.240	727	Brass Br. PVD	6.662
707	Black Metal Br. PVD	6.662	845	Dark Bronze	6.662
708	Copper Br. PVD	6.662			

HABITO RIGATO

54139+70538

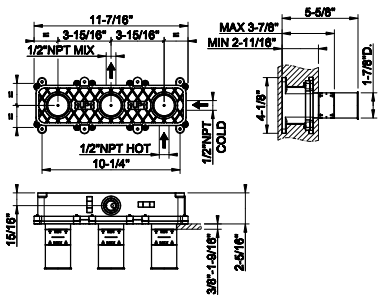

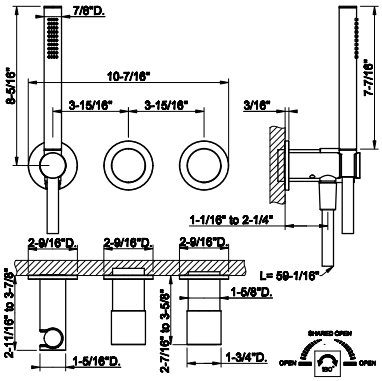

54139

Wall-mounted bath mixer control rough valve
- 1/2" connections
- Non positive shut off



239	Steel Br.	1.087

70538

TRIM PARTS ONLY. Wall-mounted bath mixer control. RIGATO
- Handshower
- Single backplate
- Two-way diverter
- Water outlet
- Handshower max flow rate 1.75 GPM



031	Chrome	1.711	735	Warm Bronze PVD	2.533
149	Finox Br. Nickel	2.310	726	Warm Bronze Br. PVD	2.702
299	Matte Black	2.310	710	Brass PVD	2.533
706	Black Metal PVD	2.533	727	Brass Br. PVD	2.702
707	Black Metal Br. PVD	2.702	845	Dark Bronze	2.702
708	Copper Br. PVD	2.702			

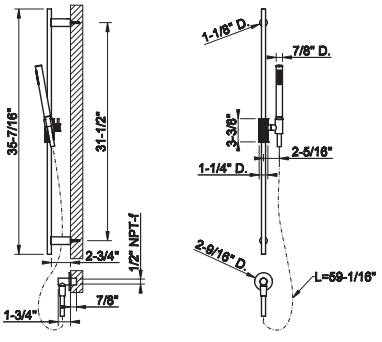

63582

Handshower and adjustable sliding rail set. RIGATO
- Adjustable bar
- Adjustable hook
- 59" Flex hose
- Wall elbow
- Max flow rate1.75 GPM.



031	Chrome	1.656	735	Warm Bronze PVD	2.450
149	Finox Br. Nickel	2.236	726	Warm Bronze Br. PVD	2.617
299	Matte Black	2.236	710	Brass PVD	2.450
720	Nickel PVD	2.450	727	Brass Br. PVD	2.617
706	Black Metal PVD	2.450	187	Aged Bronze	2.617
707	Black Metal Br. PVD	2.617	713	Antique Brass	2.617
030	Copper PVD	2.450	845	Dark Bronze	2.617
708	Copper Br. PVD	2.617			


GESSI
HABITO
DIAMANTATO

70601



Single lever washbasin mixer with pop-up assembly.
DIAMANTATO
• Spout projection 5-1/8”
• Height 7-1/2”
• 1-1/4” D. pop-up drain and flexible hoses with 9/16” – 24 UNEF connections.
• Max flow rate 1.2 GPM

031	Chrome	1.048	735	Warm Bronze PVD	1.553
149	Finox Br. Nickel	1.415	726	Warm Bronze Br. PVD	1.658
299	Matte Black	1.415	710	Brass PVD	1.553
706	Black Metal PVD	1.553	727	Brass Br. PVD	1.658
707	Black Metal Br. PVD	1.658	845	Dark Bronze	1.658
708	Copper Br. PVD	1.658			

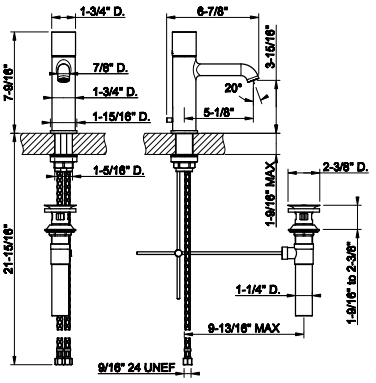

70602



Single lever washbasin mixer without pop-up assembly.
DIAMANTATO
• Spout projection 5-1/8
• Height 7-1/2”
• Drain not included – see DRAINS section
• Max flow rate 1.2 GPM
• Flexible hoses with 9/16” – 24 UNEF connections.

031	Chrome	961	735	Warm Bronze PVD	1.423
149	Finox Br. Nickel	1.298	726	Warm Bronze Br. PVD	1.517
299	Matte Black	1.298	710	Brass PVD	1.423
706	Black Metal PVD	1.423	727	Brass Br. PVD	1.517
707	Black Metal Br. PVD	1.517	845	Dark Bronze	1.517
708	Copper Br. PVD	1.517			

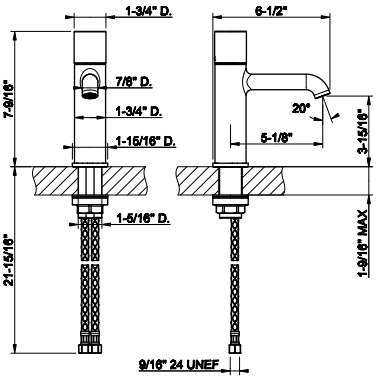

70605



Medium single lever washbasin mixer with pop-up assembly.
DIAMANTATO
• Spout projection 6-7/16”
• Height 10-1/2”
• 1-1/4” pop up drain and Flexible hoses with 9/16” – 24 UNEF connections.
• Max flow rate 1.2 GPM

031	Chrome	1.223	735	Warm Bronze PVD	1.811
149	Finox Br. Nickel	1.653	726	Warm Bronze Br. PVD	1.932
299	Matte Black	1.653	710	Brass PVD	1.811
706	Black Metal PVD	1.811	727	Brass Br. PVD	1.932
707	Black Metal Br. PVD	1.932	845	Dark Bronze	1.932
708	Copper Br. PVD	1.932			

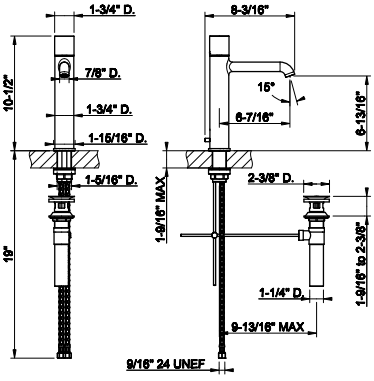

70606



Medium single lever washbasin mixer without pop-up assembly.
DIAMANTATO
• Spout projection 6-7/16”
• Height 10-1/2”
• Drain not included – see DRAINS section
• Max flow rate 1.2 GPM
• Flexible hoses with 9/16” – 24 UNEF connections.

031	Chrome	1.136	735	Warm Bronze PVD	1.681
149	Finox Br. Nickel	1.532	726	Warm Bronze Br. PVD	1.796
299	Matte Black	1.532	710	Brass PVD	1.681
706	Black Metal PVD	1.681	727	Brass Br. PVD	1.796
707	Black Metal Br. PVD	1.796	845	Dark Bronze	1.796
708	Copper Br. PVD	1.796			

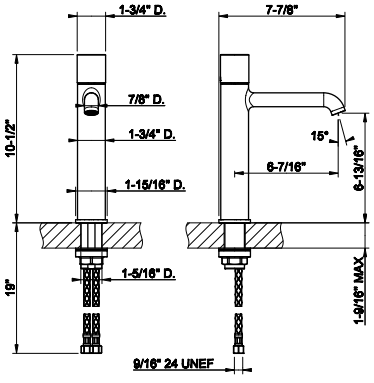

HABITO DIAMANTATO

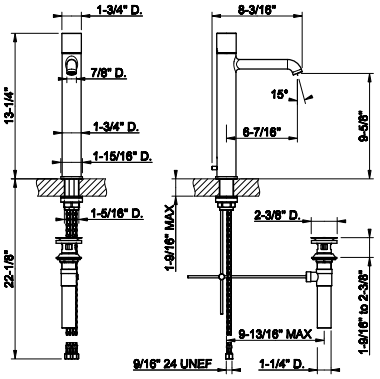

70603

Tall single lever washbasin mixer with pop-up assembly.
DIAMANTATO
•Spout projection 6-7/16”
• Height 13-1/4”
• 1-1/4” D. pop-up drain and flexible hoses with 9/16” – 24UNEF connections
• Max flow rate 1.2 GPM



031	Chrome	1.321	735	Warm Bronze PVD	1.955
149	Finox Br. Nickel	1.783	726	Warm Bronze Br. PVD	2.088
299	Matte Black	1.783	710	Brass PVD	1.955
706	Black Metal PVD	1.955	727	Brass Br. PVD	2.088
707	Black Metal Br. PVD	2.088	845	Dark Bronze	2.088
708	Copper Br. PVD	2.088			

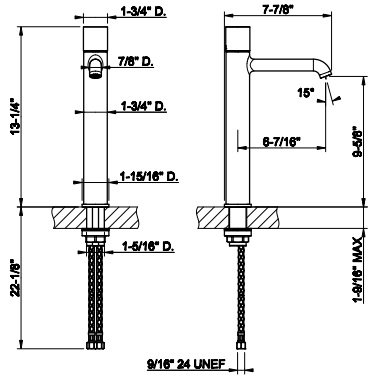

70604

Tall single lever washbasin mixer without pop-up assembly.
DIAMANTATO
• Spout projection 6-7/16”
• Height 13-1/4”
• Drain not included – see DRAINS section
• Max flow rate 1.2 GPM
• Flexible hoses with 9/16” – 24 UNEF connections.



031	Chrome	1.233	735	Warm Bronze PVD	1.826
149	Finox Br. Nickel	1.666	726	Warm Bronze Br. PVD	1.947
299	Matte Black	1.666	710	Brass PVD	1.826
706	Black Metal PVD	1.826	727	Brass Br. PVD	1.947
707	Black Metal Br. PVD	1.947	845	Dark Bronze	1.947
708	Copper Br. PVD	1.947			

54197+70688

54197

Wall-mounted washbasin mixer rough valve
• Drain not included - See DRAINS section

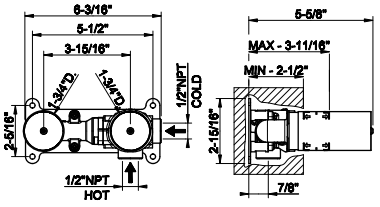



239	Steel Br.	809			

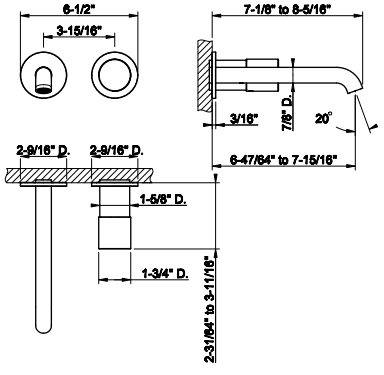

70688

TRIM PARTS ONLY Wall-mounted washbasin mixer trim.
DIAMANTATO
• Spout projection 6-47/64” to 7-15/16”
• Drain not included - See DRAINS section
• Requires in-wall rough valve 54197
• Max flow rate 1.2 GPM
• ADA compliant



031	Chrome	948	735	Warm Bronze PVD	1.402
149	Finox Br. Nickel	1.280	726	Warm Bronze Br. PVD	1.498
299	Matte Black	1.280	710	Brass PVD	1.402
706	Black Metal PVD	1.402	727	Brass Br. PVD	1.498
707	Black Metal Br. PVD	1.498	845	Dark Bronze	1.498
708	Copper Br. PVD	1.498			

66102

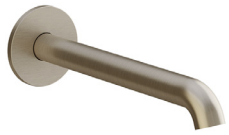

Wall-mounted washbasin spout only
- Projection 8-1/16”
- 1/2” connections
- Drain not included - See DRAINS section
- Requires mixercontrol
- Max flow rate 1.2 GPM.

031	Chrome	401	720	Nickel PVD	593
275	Matte Cipria	541	706	Black Metal PVD	593
273	Matte Greige	541	707	Black Metal Br. PVD	633
277	Glossy Ocra	633	708	Copper Br. PVD	633
278	Glossy Coral	633	726	Warm Bronze Br. PVD	633
276	Matte Agave	541	727	Brass Br. PVD	633
149	Finox Br. Nickel	541	845	Dark Bronze	633
299	Matte Black	541			

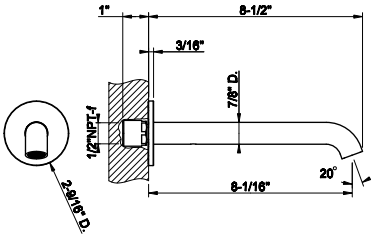

66104

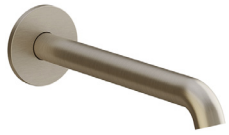

Wall-mounted washbasin spout only
- Custom length MIN3-9/16” - MAX11-13/16”
- 1/2” connections
- Drain not included - See DRAINS section
- Requires mixercontrol
- Max flow rate 1.2 GPM.

031	Chrome	801	720	Nickel PVD	1.185
275	Matte Cipria	1.080	706	Black Metal PVD	1.185
273	Matte Greige	1.080	707	Black Metal Br. PVD	1.265
277	Glossy Ocra	1.265	708	Copper Br. PVD	1.265
278	Glossy Coral	1.265	726	Warm Bronze Br. PVD	1.265
276	Matte Agave	1.080	727	Brass Br. PVD	1.265
149	Finox Br. Nickel	1.080	845	Dark Bronze	1.265
299	Matte Black	1.080			

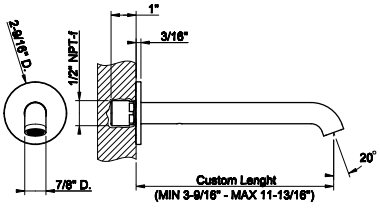

63399



Ceiling-mounted washbasin spout only
- Spout length 63”
- Drain not included - See DRAINS section
- Requires mixer control
- Maxflow rate 1.2 gpm

031	Chrome	1.777	030	Copper PVD	2.631
275	Matte Cipria	2.279	708	Copper Br. PVD	2.806
273	Matte Greige	2.279	735	Warm Bronze PVD	2.631
277	Glossy Ocra	2.666	726	Warm Bronze Br. PVD	2.806
278	Glossy Coral	2.666	710	Brass PVD	2.631
276	Matte Agave	2.279	727	Brass Br. PVD	2.806
149	Finox Br. Nickel	2.399	246	Gold PVD	2.986
299	Matte Black	2.399	716	Gold Br. PVD	2.986
720	Nickel PVD	2.631	187	Aged Bronze	2.806
706	Black Metal PVD	2.631	713	Antique Brass	2.806
707	Black Metal Br. PVD	2.806	845	Dark Bronze	2.666

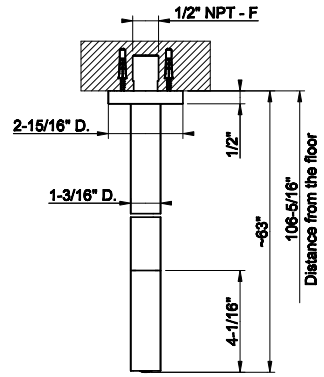

HABITO DIAMANTATO

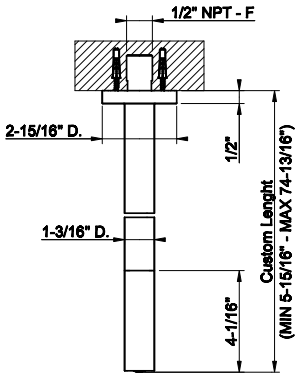

63499

Ceiling-mounted washbasin spout only
- Custom length: Minimum 5-15/16" - Maximum 74-13/16"
- Drain not included - See DRAINS section
- Requires mixer control
- Max flow rate 1.2 gpm



031	Chrome	2.548	030	Copper PVD	3.769
275	Matte Cipria	3.439	708	Copper Br. PVD	4.022
273	Matte Greige	3.439	735	Warm Bronze PVD	3.769
277	Glossy Ocra	3.439	726	Warm Bronze Br. PVD	4.022
278	Glossy Coral	3.439	710	Brass PVD	3.769
276	Matte Agave	3.439	727	Brass Br. PVD	4.022
149	Finox Br. Nickel	3.439	246	Gold PVD	4.281
299	Matte Black	3.439	716	Gold Br. PVD	4.281
720	Nickel PVD	3.769	187	Aged Bronze	4.022
706	Black Metal PVD	3.769	713	Antique Brass	4.022
707	Black Metal Br. PVD	4.022	845	Dark Bronze	4.022

54055+70699

54055

Wall-mounted Basin/bath mixer rough valve. One exit

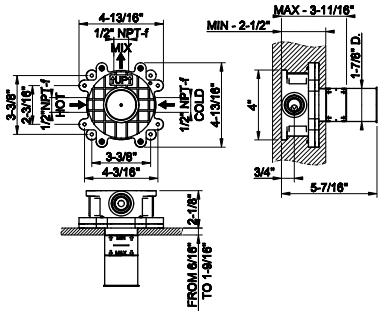

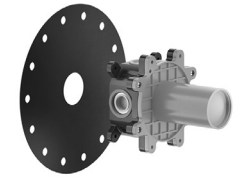

239	Steel Br.	563

70699

TRIM PARTS ONLY Wall-mounted washbasin mixer control DIAMANTATO
- 1/2" connections
- Drain not included - See DRAINS section
- Requires in-wallrough valve 54055

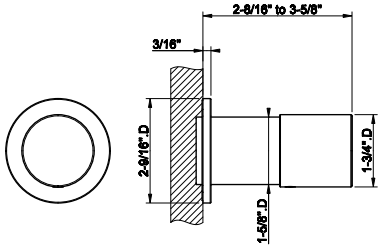



031	Chrome	548	735	Warm Bronze PVD	814
149	Finox Br. Nickel	741	726	Warm Bronze Br. PVD	868
299	Matte Black	741	710	Brass PVD	814
706	Black Metal PVD	814	727	Brass Br. PVD	868
707	Black Metal Br. PVD	868	845	Dark Bronze	868
708	Copper Br. PVD	868			



48189

Floor-mounted tub filler in-floor rough valve

031	Chrome	847

48189+70628

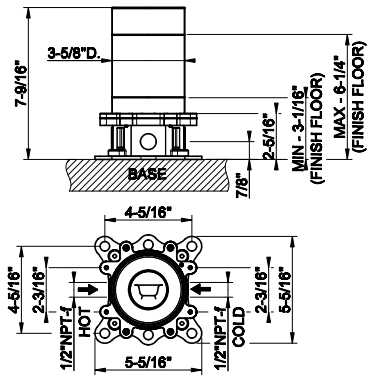



70628

TRIM PARTS ONLY Floor-mounted tub filler DIAMANTATO
- Handshower
- Diverter
- Spout projection 10-1/4”
- Requires in-floor rough valve 48189
- Handshower max flow rate 1.75 GPM
- Spout mixed flow rate 6 GPM at 60 PSI.

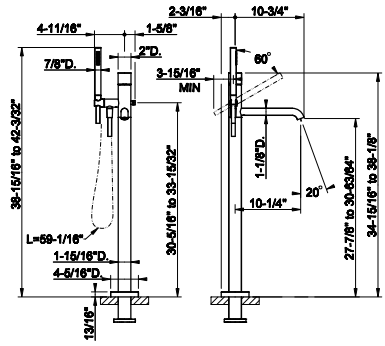

031	Chrome	4.216	735	Warm Bronze PVD	6.240
149	Finox Br. Nickel	5.693	726	Warm Bronze Br. PVD	6.662
299	Matte Black	5.693	710	Brass PVD	6.240
706	Black Metal PVD	6.240	727	Brass Br. PVD	6.662
707	Black Metal Br. PVD	6.662	845	Dark Bronze	6.662
708	Copper Br. PVD	6.662			

HABITO DIAMANTATO

54139+70638

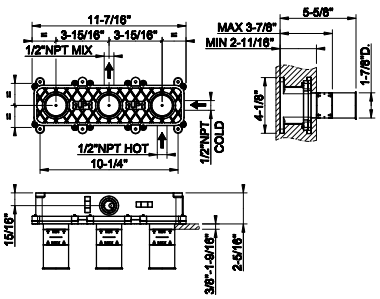

54139

Wall-mounted bath mixer control rough valve
- 1/2" connections
- Non positive shut off



239	Steel Br.	1.087

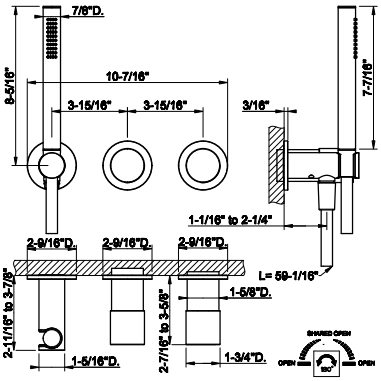

70638

TRIM PARTS ONLY. Wall-mounted bath mixer control. DIAMANTATO
- Handshower
- Single backplate
- Two-way diverter
- Water outlet
- Handshower max flow rate 1.75 GPM



031	Chrome	1.711	735	Warm Bronze PVD	2.533
149	Finox Br. Nickel	2.310	726	Warm Bronze Br. PVD	2.702
299	Matte Black	2.310	710	Brass PVD	2.533
706	Black Metal PVD	2.533	727	Brass Br. PVD	2.702
707	Black Metal Br. PVD	2.702	845	Dark Bronze	2.702
708	Copper Br. PVD	2.702			

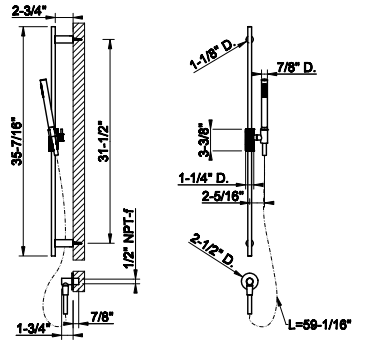

63482

Handshower and adjustable sliding rail set. DIAMANTATO
- Adjustable bar
- Adjustable hook
- 59" Flex hose
- Wall elbow
- Max flow rate 1.75 GPM.



031	Chrome	1.656	735	Warm Bronze PVD	2.450
149	Finox Br. Nickel	2.236	726	Warm Bronze Br. PVD	2.617
299	Matte Black	2.236	710	Brass PVD	2.450
720	Nickel PVD	2.450	727	Brass Br. PVD	2.617
706	Black Metal PVD	2.450	187	Aged Bronze	2.617
707	Black Metal Br. PVD	2.617	713	Antique Brass	2.617
030	Copper PVD	2.450	845	Dark Bronze	2.617
708	Copper Br. PVD	2.617			


GESSI
HABITO
CESELLO

70401



Single lever washbasin mixer with pop-up assembly. CESELLO
- Spout projection 5-1/8”
- Height 7-1/2”
- 1-1/4” D. pop-up drain andflexible hoses with 9/16” – 24 UNEF connections.
- Max flow rate 1.2 GPM

031	Chrome	1.048	735	Warm Bronze PVD	1.553
149	Finox Br. Nickel	1.415	726	Warm Bronze Br. PVD	1.658
299	Matte Black	1.415	710	Brass PVD	1.553
706	Black Metal PVD	1.553	727	Brass Br. PVD	1.658
707	Black Metal Br. PVD	1.658	845	Dark Bronze	1.658
708	Copper Br. PVD	1.658			

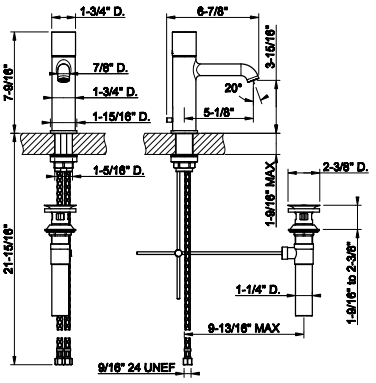

70402



Single lever washbasin mixer without pop-up assembly. CESELLO
- Spout projection 5-1/8”
- Height 7-1/2”
- Drain not included – seeDRAINS section
- Max flow rate 1.2 GPM
- Flexible hoses with 9/16” – 24 UNEF connections.

031	Chrome	961	735	Warm Bronze PVD	1.423
149	Finox Br. Nickel	1.298	726	Warm Bronze Br. PVD	1.517
299	Matte Black	1.298	710	Brass PVD	1.423
706	Black Metal PVD	1.423	727	Brass Br. PVD	1.517
707	Black Metal Br. PVD	1.517	845	Dark Bronze	1.517
708	Copper Br. PVD	1.517			

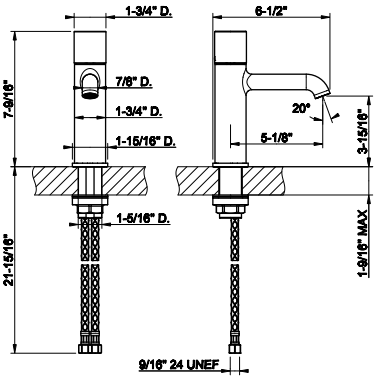

70405



Medium single lever washbasin mixer with pop-up assembly. CESELLO
- Spout projection 6-7/16”
- Height 10-1/2”
- 1-1/4” pop up drain and Flexible hoses with 9/16” – 24 UNEF connections.
- Max flow rate 1.2 GPM

031	Chrome	1.223	735	Warm Bronze PVD	1.811
149	Finox Br. Nickel	1.653	726	Warm Bronze Br. PVD	1.932
299	Matte Black	1.653	710	Brass PVD	1.811
706	Black Metal PVD	1.811	727	Brass Br. PVD	1.932
707	Black Metal Br. PVD	1.932	845	Dark Bronze	1.932
708	Copper Br. PVD	1.932			

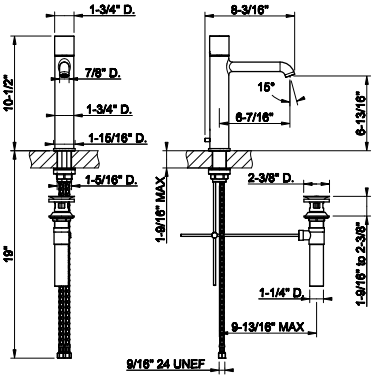

70406



Medium single lever washbasin mixer without pop-up assembly. CESELLO
- Spout projection 6-7/16”
- Height 10-1/2”
- Drain not included – see DRAINS section
- Max flow rate 1.2 GPM
- Flexible hoses with 9/16” – 24 UNEF connections.

031	Chrome	1.136	735	Warm Bronze PVD	1.681
149	Finox Br. Nickel	1.532	726	Warm Bronze Br. PVD	1.796
299	Matte Black	1.532	710	Brass PVD	1.681
706	Black Metal PVD	1.681	727	Brass Br. PVD	1.796
707	Black Metal Br. PVD	1.796	845	Dark Bronze	1.796
708	Copper Br. PVD	1.796			

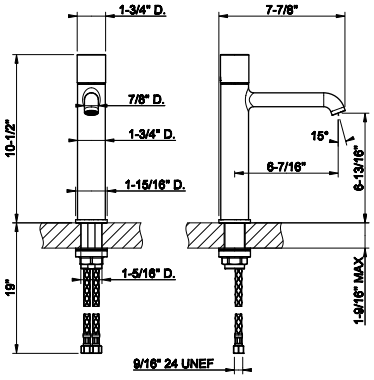

HABITO CESELLO

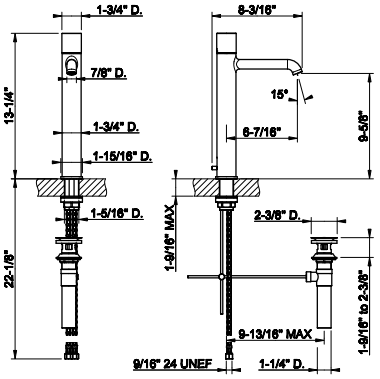

70403

Tall single lever washbasin mixer with pop-up assembly.
CESELLO
- Spout projection 6-7/16”
- Height 13-1/4”
- 1-1/4” D. pop-up drain and flexible hoses with 9/16” – 24UNEF connections
- Max flow rate 1.2 GPM



031	Chrome	1.321	735	Warm Bronze PVD	1.955
149	Finox Br. Nickel	1.783	726	Warm Bronze Br. PVD	2.088
299	Matte Black	1.783	710	Brass PVD	1.955
706	Black Metal PVD	1.955	727	Brass Br. PVD	2.088
707	Black Metal Br. PVD	2.088	845	Dark Bronze	2.088
708	Copper Br. PVD	2.088			

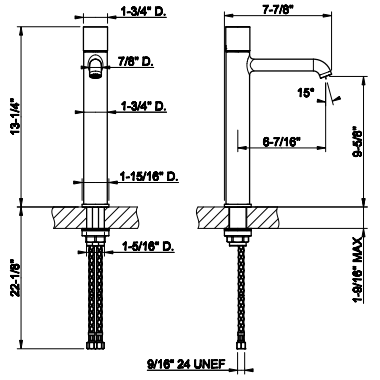

70404

Tall single lever washbasin mixer without pop-up assembly.
CESELLO
- Spout projection 6-7/16”
- Height 13-1/4”
- Drain not included – see DRAINS section
- Max flow rate 1.2 GPM
- Flexible hoses with 9/16” – 24 UNEF connections.



031	Chrome	1.233	735	Warm Bronze PVD	1.826
149	Finox Br. Nickel	1.666	726	Warm Bronze Br. PVD	1.947
299	Matte Black	1.666	710	Brass PVD	1.826
706	Black Metal PVD	1.826	727	Brass Br. PVD	1.947
707	Black Metal Br. PVD	1.947	845	Dark Bronze	1.947
708	Copper Br. PVD	1.947			

54197+70488

54197

Wall-mounted washbasin mixer rough valve
- Drain not included - See DRAINS section

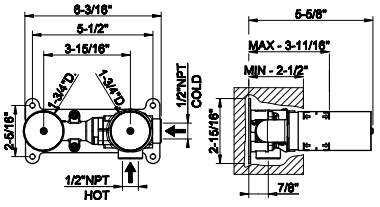



239	Steel Br.	809			

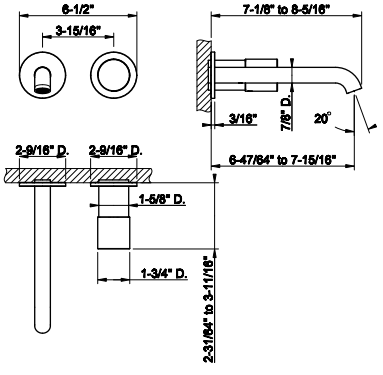

70488

TRIM PARTS ONLY Wall-mounted washbasin mixer trim.
CESELLO
- Spout projection 6-47/64” to 7-15/16”
- Drain not included - See DRAINS section
- Requires in-wall rough valve 54197
- Max flow rate 1.2 GPM
- ADA compliant



031	Chrome	948	735	Warm Bronze PVD	1.402
149	Finox Br. Nickel	1.280	726	Warm Bronze Br. PVD	1.498
299	Matte Black	1.280	710	Brass PVD	1.402
706	Black Metal PVD	1.402	727	Brass Br. PVD	1.498
707	Black Metal Br. PVD	1.498	845	Dark Bronze	1.498
708	Copper Br. PVD	1.498			

66102

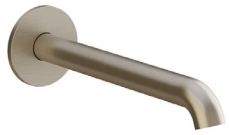

Wall-mounted washbasin spout only
- Projection 8-1/16”
- 1/2” connections
- Drain not included - See DRAINS section
- Requires mixercontrol
- Max flow rate 1.2 GPM.

031	Chrome	401	720	Nickel PVD	593
275	Matte Cipria	541	706	Black Metal PVD	593
273	Matte Greige	541	707	Black Metal Br. PVD	633
277	Glossy Ocra	633	708	Copper Br. PVD	633
278	Glossy Coral	633	726	Warm Bronze Br. PVD	633
276	Matte Agave	541	727	Brass Br. PVD	633
149	Finox Br. Nickel	541	845	Dark Bronze	633
299	Matte Black	541			

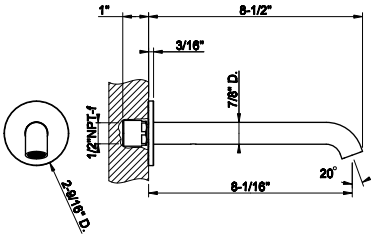

66104

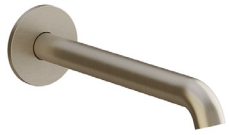

Wall-mounted washbasin spout only
- Custom length MIN3-9/16” - MAX11-13/16”
- 1/2” connections
- Drain not included - See DRAINS section
- Requires mixercontrol
- Max flow rate 1.2 GPM.

031	Chrome	801	720	Nickel PVD	1.185
275	Matte Cipria	1.080	706	Black Metal PVD	1.185
273	Matte Greige	1.080	707	Black Metal Br. PVD	1.265
277	Glossy Ocra	1.265	708	Copper Br. PVD	1.265
278	Glossy Coral	1.265	726	Warm Bronze Br. PVD	1.265
276	Matte Agave	1.080	727	Brass Br. PVD	1.265
149	Finox Br. Nickel	1.080	845	Dark Bronze	1.265
299	Matte Black	1.080			

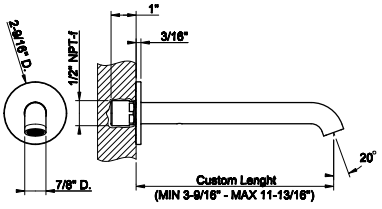

63399



Ceiling-mounted washbasin spout only
- Spout length 63”
- Drain not included - See DRAINS section
- Requires mixer control
- Maxflow rate 1.2 gpm

031	Chrome	1.777	030	Copper PVD	2.631
275	Matte Cipria	2.279	708	Copper Br. PVD	2.806
273	Matte Greige	2.279	735	Warm Bronze PVD	2.631
277	Glossy Ocra	2.666	726	Warm Bronze Br. PVD	2.806
278	Glossy Coral	2.666	710	Brass PVD	2.631
276	Matte Agave	2.279	727	Brass Br. PVD	2.806
149	Finox Br. Nickel	2.399	246	Gold PVD	2.986
299	Matte Black	2.399	716	Gold Br. PVD	2.986
720	Nickel PVD	2.631	187	Aged Bronze	2.806
706	Black Metal PVD	2.631	713	Antique Brass	2.806
707	Black Metal Br. PVD	2.806	845	Dark Bronze	2.666

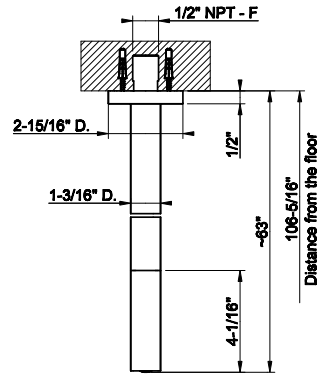

HABITO CESELLO

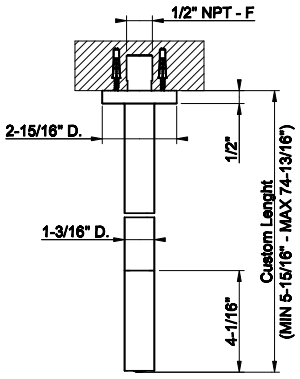

63499

Ceiling-mounted washbasin spout only
- Custom length: Minimum 5-15/16" - Maximum 74-13/16"
- Drain not included - See DRAINS section
- Requires mixer control
- Max flow rate 1.2 gpm



031	Chrome	2.548	030	Copper PVD	3.769
275	Matte Cipria	3.439	708	Copper Br. PVD	4.022
273	Matte Greige	3.439	735	Warm Bronze PVD	3.769
277	Glossy Ocra	3.439	726	Warm Bronze Br. PVD	4.022
278	Glossy Coral	3.439	710	Brass PVD	3.769
276	Matte Agave	3.439	727	Brass Br. PVD	4.022
149	Finox Br. Nickel	3.439	246	Gold PVD	4.281
299	Matte Black	3.439	716	Gold Br. PVD	4.281
720	Nickel PVD	3.769	187	Aged Bronze	4.022
706	Black Metal PVD	3.769	713	Antique Brass	4.022
707	Black Metal Br. PVD	4.022	845	Dark Bronze	4.022

54055+70499

54055

Wall-mounted Basin/bath mixer rough valve. One exit

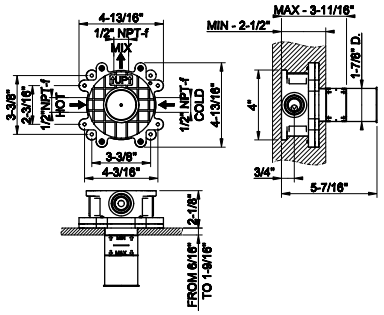

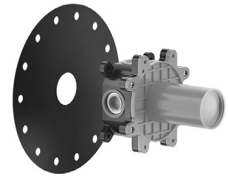

239	Steel Br.	563

70499

TRIM PARTS ONLY Wall-mounted washbasin mixer control CESELLO
- 1/2" connections
- Drain not included - See DRAINS section
- Requiresin-wallrough valve 54055

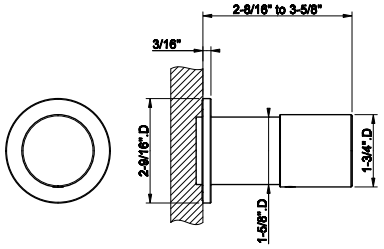



031	Chrome	548	735	Warm Bronze PVD	814
149	Finox Br. Nickel	741	726	Warm Bronze Br. PVD	868
299	Matte Black	741	710	Brass PVD	814
706	Black Metal PVD	814	727	Brass Br. PVD	868
707	Black Metal Br. PVD	868	845	Dark Bronze	868
708	Copper Br. PVD	868			



48189

Floor-mounted tub filler in-floor rough valve

031	Chrome	847

48189+70428

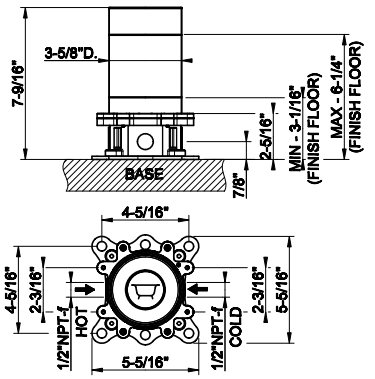



70428

TRIM PARTS ONLY Floor-mounted tub filler CESELLO
- Handshower
- Diverter
- Spout projection 10-1/4”
- Requires in-floor rough valve48189
- Handshower max flow rate 1.75 GPM
- Spout mixed flow rate 6 GPM at 60 PSI.

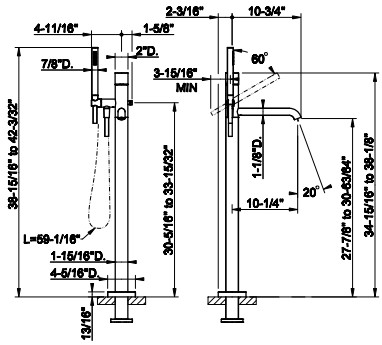

031	Chrome	4.216	735	Warm Bronze PVD	6.240
149	Finox Br. Nickel	5.693	726	Warm Bronze Br. PVD	6.662
299	Matte Black	5.693	710	Brass PVD	6.240
706	Black Metal PVD	6.240	727	Brass Br. PVD	6.662
707	Black Metal Br. PVD	6.662	845	Dark Bronze	6.662
708	Copper Br. PVD	6.662			

HABITO CESELLO

54139+70438

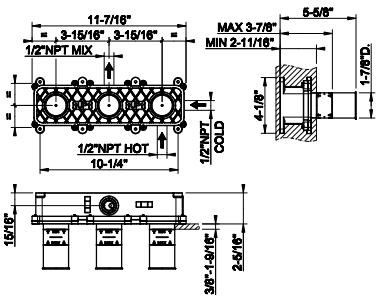

54139

Wall-mounted bath mixer control rough valve
- 1/2” connections
- Non positive shut off



239	Steel Br.	1.087

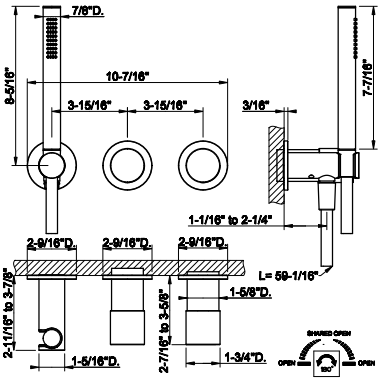

70438

TRIM PARTS ONLY. Wall-mounted bath mixer control. CESELLO
- Handshower
- Single backplate
- Two-way diverter
- Water outlet
- Handshower max flow rate 1.75 GPM



031	Chrome	1.711	735	Warm Bronze PVD	2.533
149	Finox Br. Nickel	2.310	726	Warm Bronze Br. PVD	2.702
299	Matte Black	2.310	710	Brass PVD	2.533
706	Black Metal PVD	2.533	727	Brass Br. PVD	2.702
707	Black Metal Br. PVD	2.702	845	Dark Bronze	2.702
708	Copper Br. PVD	2.702			

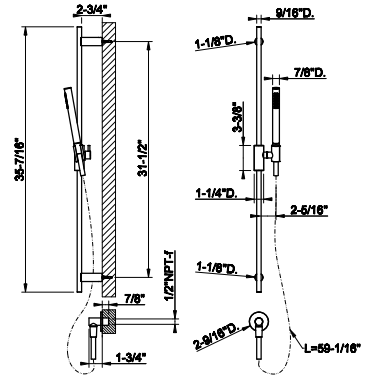

70442

Handshower and adjustable sliding rail set. CESELLO
- Adjustable bar
- Adjustable hook
- 59” Flex hose
- Wall elbow
- Max flow rate 1.75GPM. Insert in desired finish included.



031	Chrome	1.696	735	Warm Bronze PVD	2.510
149	Finox Br. Nickel	2.290	726	Warm Bronze Br. PVD	2.680
299	Matte Black	2.290	710	Brass PVD	2.510
706	Black Metal PVD	2.510	727	Brass Br. PVD	2.680
707	Black Metal Br. PVD	2.680	845	Dark Bronze	2.680
708	Copper Br. PVD	2.680			



HABITO

BATH-SHOWER

66103



Wall mounted Bath spout only
- 1/2’ connections with separate control (not included)
- Spout projection 7-9/16”
- Drain not included -See DRAINS section
- Requires mixer control
- Flow rate 6.4 GPM at 60 PSI

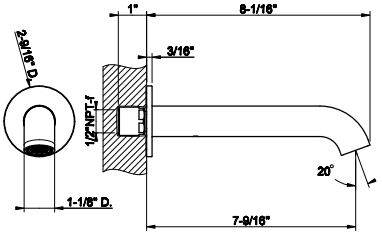

031	Chrome	518	707	Black Metal Br. PVD	820
149	Finox Br. Nickel	701	708	Copper Br. PVD	820
299	Matte Black	701	726	Warm Bronze Br. PVD	820
720	Nickel PVD	769	727	Brass Br. PVD	820
706	Black Metal PVD	769	845	Dark Bronze	820

09279

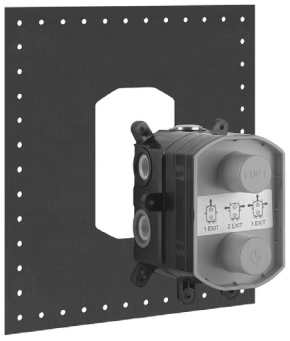

In-wall thermostatic rough valve for 1/2/3-way diverter function
- 1/2” connections
- Vertical application
- Anti-scalding
- Non-Shared function

031	Chrome	877

09279+73533

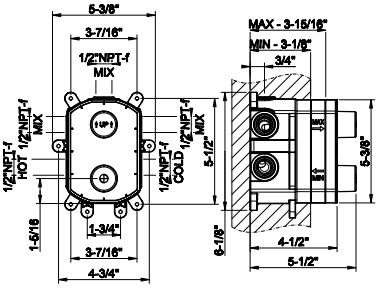

73533



TRIM PARTS ONLY External parts for thermostatic with single volume control. RIGATO
- Single backplate
- Vertical application
- Requires in-wall rough valve 09279

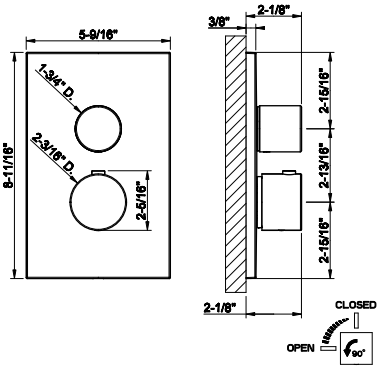

031	Chrome	1.785	735	Warm Bronze PVD	2.642
149	Finox Br. Nickel	2.410	726	Warm Bronze Br. PVD	2.823
299	Matte Black	2.410	710	Brass PVD	2.642
720	Nickel PVD	2.642	727	Brass Br. PVD	2.823
706	Black Metal PVD	2.642	187	Aged Bronze	2.823
707	Black Metal Br. PVD	2.823	713	Antique Brass	2.823
030	Copper PVD	2.642	845	Dark Bronze	2.823
708	Copper Br. PVD	2.823			

09279+73633

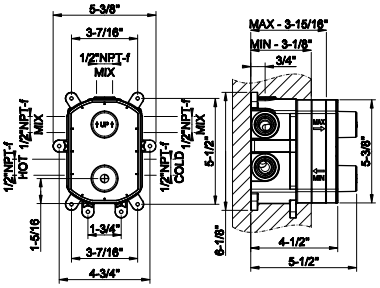

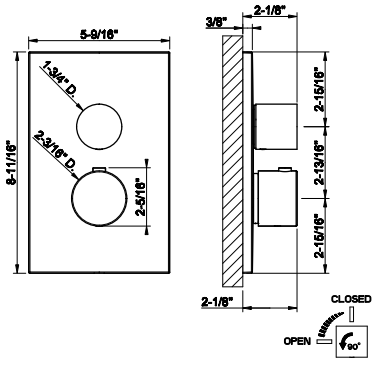

09279

In-wall thermostatic rough valve for 1/2/3-way diverter function
- 1/2" connections
- Vertical application
- Anti-scalding
- Non-Shared function

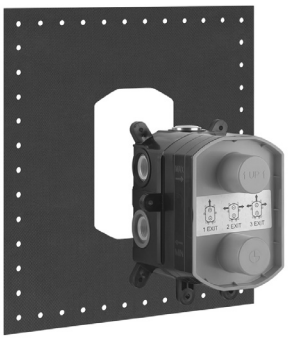

031	Chrome	877

73633

TRIM PARTS ONLY External parts for thermostatic with single volume control. DIAMANTATO
- Single backplate
- Vertical application
- Requires in-wall rough valve 09279



031	Chrome	1.785	735	Warm Bronze PVD	2.642
149	Finox Br. Nickel	2.410	726	Warm Bronze Br. PVD	2.823
299	Matte Black	2.410	710	Brass PVD	2.642
720	Nickel PVD	2.642	727	Brass Br. PVD	2.823
706	Black Metal PVD	2.642	187	Aged Bronze	2.823
707	Black Metal Br. PVD	2.823	713	Antique Brass	2.823
030	Copper PVD	2.642	845	Dark Bronze	2.823
708	Copper Br. PVD	2.823			

09279+73535

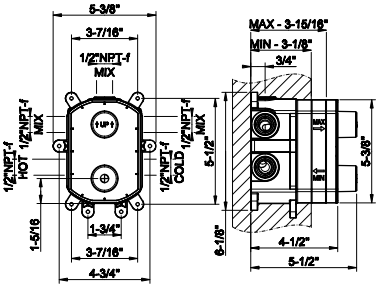

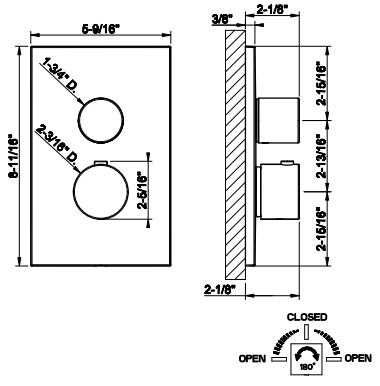

09279

In-wall thermostatic rough valve for 1/2/3-way diverter function
- 1/2" connections
- Vertical application
- Anti-scalding
- Non-Shared function

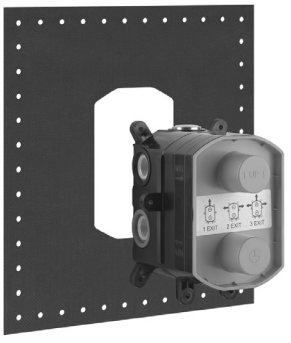

031	Chrome	877

73535

TRIM PARTS ONLY External parts for two ways diverter thermostatic and volume control. RIGATO
- Single backplate
- Vertical application
- Requires in-wall rough valve 09279



031	Chrome	1.785	735	Warm Bronze PVD	2.642
149	Finox Br. Nickel	2.410	726	Warm Bronze Br. PVD	2.823
299	Matte Black	2.410	710	Brass PVD	2.642
720	Nickel PVD	2.642	727	Brass Br. PVD	2.823
706	Black Metal PVD	2.642	187	Aged Bronze	2.823
707	Black Metal Br. PVD	2.823	713	Antique Brass	2.823
030	Copper PVD	2.642	845	Dark Bronze	2.823
708	Copper Br. PVD	2.823			

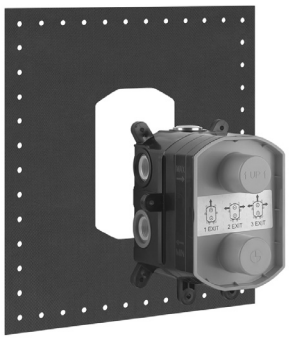

09279

In-wall thermostatic rough valve for 1/2/3-way diverter function
- 1/2” connections
- Vertical application
- Anti-scalding
- Non-Shared function

031	Chrome	877

09279+73635

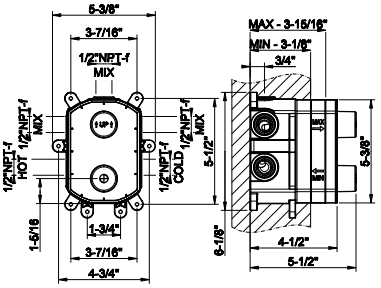



73635

TRIM PARTS ONLY External parts for two ways diverter thermostatic and volume control. DIAMANTATO
- Single backplate
- Vertical application
- Requires in-wall rough valve 09279

031	Chrome	1.785	735	Warm Bronze PVD	2.642
149	Finox Br. Nickel	2.410	726	Warm Bronze Br. PVD	2.823
299	Matte Black	2.410	710	Brass PVD	2.642
720	Nickel PVD	2.642	727	Brass Br. PVD	2.823
706	Black Metal PVD	2.642	187	Aged Bronze	2.823
707	Black Metal Br. PVD	2.823	713	Antique Brass	2.823
030	Copper PVD	2.642	845	Dark Bronze	2.823
708	Copper Br. PVD	2.823			

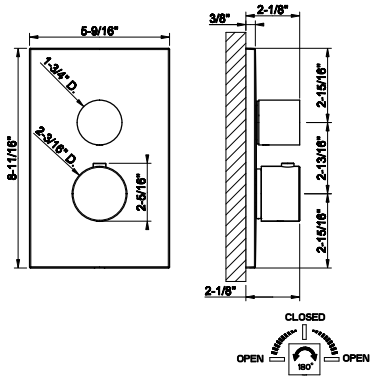

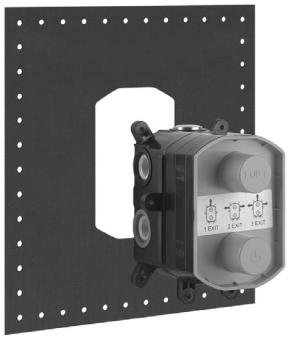

09279

In-wall thermostatic rough valve for 1/2/3-way diverter function
- 1/2” connections
- Vertical application
- Anti-scalding
- Non-Shared function

031	Chrome	877

09279+73537

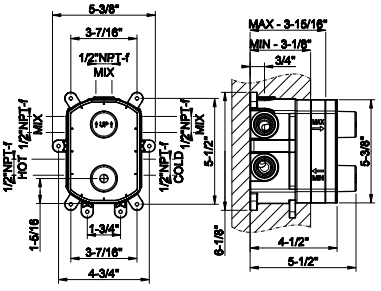



73537

TRIM PARTS ONLY External parts for three ways diverter thermostatic and volume control. RIGATO
- Single backplate
- Vertical application
- Requires in-wall rough valve 09279

031	Chrome	1.785	735	Warm Bronze PVD	2.642
149	Finox Br. Nickel	2.410	726	Warm Bronze Br. PVD	2.823
299	Matte Black	2.410	710	Brass PVD	2.642
720	Nickel PVD	2.642	727	Brass Br. PVD	2.823
706	Black Metal PVD	2.642	187	Aged Bronze	2.823
707	Black Metal Br. PVD	2.823	713	Antique Brass	2.823
030	Copper PVD	2.642	845	Dark Bronze	2.823
708	Copper Br. PVD	2.823			

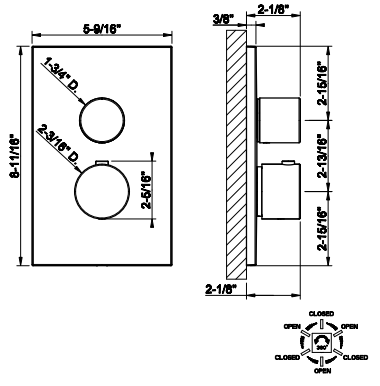

09279+73637

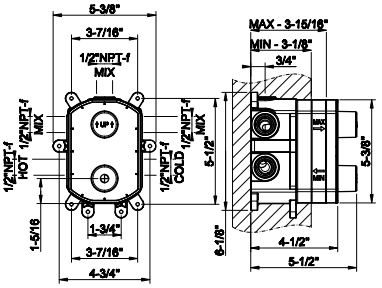

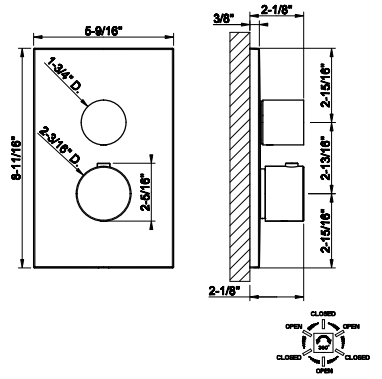

09279

In-wall thermostatic rough valve for 1/2/3-way diverter function
- 1/2” connections
- Vertical application
- Anti-scalding
- Non-Shared function

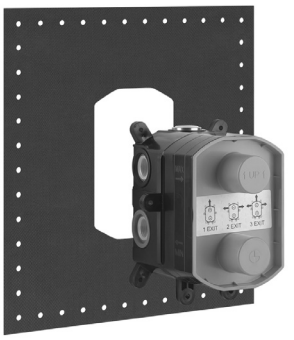

031	Chrome	877

73637

TRIM PARTS ONLY External parts for three ways diverter thermostatic and volume control. DIAMANTATO
- Single backplate
- Verticalapplication
- Requires in-wall rough valve 09279



031	Chrome	1.785	735	Warm Bronze PVD	2.642
149	Finox Br. Nickel	2.410	726	Warm Bronze Br. PVD	2.823
299	Matte Black	2.410	710	Brass PVD	2.642
720	Nickel PVD	2.642	727	Brass Br. PVD	2.823
706	Black Metal PVD	2.642	187	Aged Bronze	2.823
707	Black Metal Br. PVD	2.823	713	Antique Brass	2.823
030	Copper PVD	2.642	845	Dark Bronze	2.823
708	Copper Br. PVD	2.823			

09272+59173

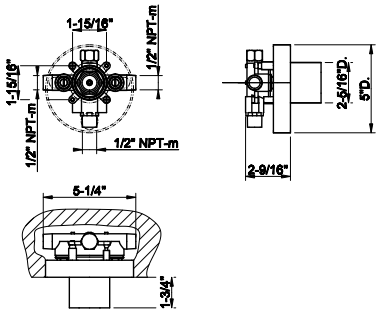

09272

In-wall single exit pressure balance rough valve
- 1/2” connections



031	Chrome	371

59173

TRIM PARTS ONLY External parts for single exit pressure balance
- Single Backplate
- 1/2” connections
- Requires in-wall rough valve 09272
- ADA compliant

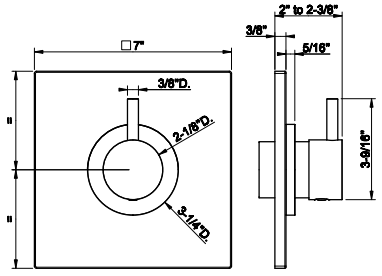



031	Chrome	627	735	Warm Bronze PVD	929
149	Finox Br. Nickel	847	726	Warm Bronze Br. PVD	992
299	Matte Black	847	710	Brass PVD	929
706	Black Metal PVD	929	727	Brass Br. PVD	992
707	Black Metal Br. PVD	992	845	Dark Bronze	992
708	Copper Br. PVD	992			



09274

In-wall pressure balance rough valve with 2-way diverter
- 1/2” connections
- Non-Shared Function

031	Chrome	443

09274+59174

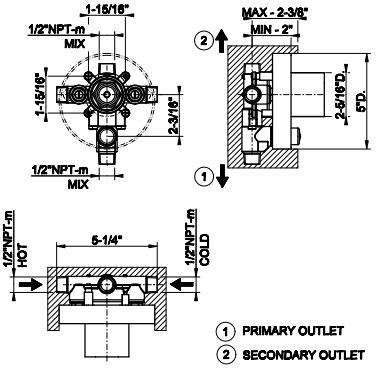



59174

TRIM PARTS ONLY External parts for Pressure balance with 2-way diverter
- 1/2” connections
- Single Backplate
- Requires in-wallrough valve 09274

031	Chrome	700	735	Warm Bronze PVD	1.034
149	Finox Br. Nickel	943	726	Warm Bronze Br. PVD	1.103
299	Matte Black	943	710	Brass PVD	1.034
706	Black Metal PVD	1.034	727	Brass Br. PVD	1.103
707	Black Metal Br. PVD	1.103	845	Dark Bronze	1.103
708	Copper Br. PVD	1.103			

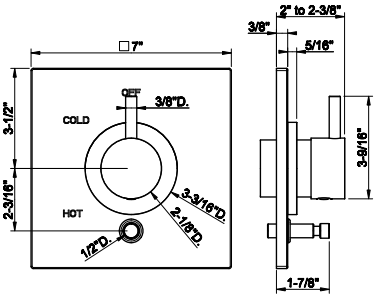

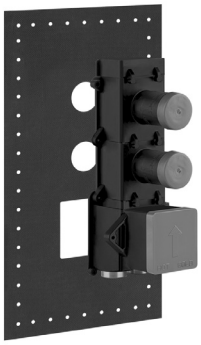

39693

In-wall thermostatic rough valve with 2 volume controls
- High capacity
- 3/4” connections
- Vertical/Horizontal application
- Anti-scalding

031	Chrome	1.903

39693+39752

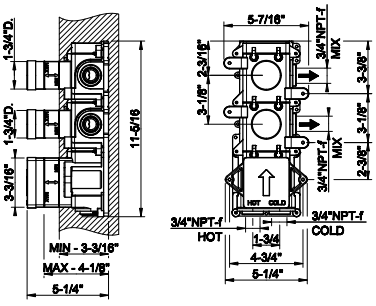



39752

TRIM PARTS ONLY External parts for thermostatic with 2 volume controls
- Single backplate
- High Capacity
- 3/4” connections
- Vertical/horizontal application
- Anti-scalding
- Requires in-wall rough valve 39693

031	Chrome	2.197	735	Warm Bronze PVD	3.252
149	Finox Br. Nickel	2.966	726	Warm Bronze Br. PVD	3.471
299	Matte Black	2.966	710	Brass PVD	3.252
147	Chrome Br.	2.966	727	Brass Br. PVD	3.471
720	Nickel PVD	3.252	187	Aged Bronze	3.471
706	Black Metal PVD	3.252	713	Antique Brass	3.471
707	Black Metal Br. PVD	3.471	845	Dark Bronze	3.471
030	Copper PVD	3.252	279	Matte White	2.966
708	Copper Br. PVD	3.471			

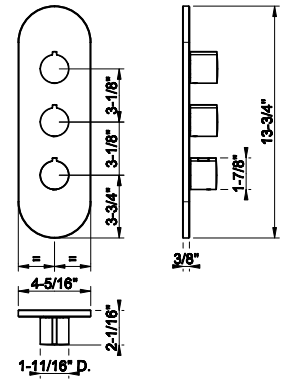

39693+39644

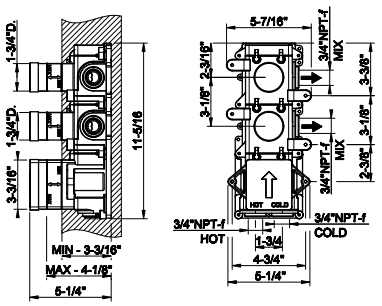

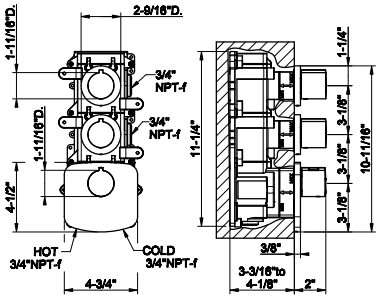

39693

In-wall thermostatic rough valve with 2 volume controls
- High capacity
- 3/4" connections
- Vertical/Horizontal application
- Anti-scalding

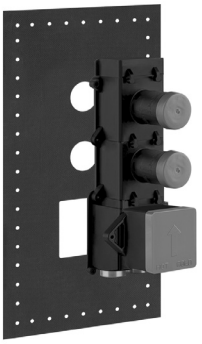

031	Chrome	1.903

39644

TRIM PARTS ONLY External parts for thermostatic with 2 volume controls
- Separate backplate
- High Capacity
- 3/4" connections
- Vertical/horizontal application
- Anti-scalding
- Requires in-wall rough valve 39693



031	Chrome	2.149	735	Warm Bronze PVD	3.915
149	Finox Br. Nickel	3.571	726	Warm Bronze Br. PVD	4.178
299	Matte Black	3.571	710	Brass PVD	3.915
147	Chrome Br.	3.571	727	Brass Br. PVD	4.178
720	Nickel PVD	3.915	187	Aged Bronze	4.178
706	Black Metal PVD	3.915	713	Antique Brass	4.178
707	Black Metal Br. PVD	4.178	845	Dark Bronze	4.178
030	Copper PVD	3.915	279	Matte White	3.571
708	Copper Br. PVD	4.178			

39695+39754

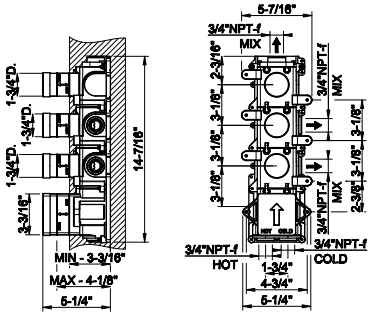

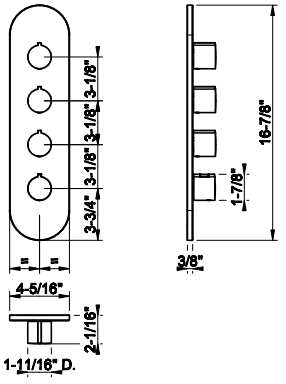

39695

In-wall thermostatic rough valve with 3 volume controls
- High capacity
- 3/4" connections
- Vertical/Horizontal application
- Anti-scalding

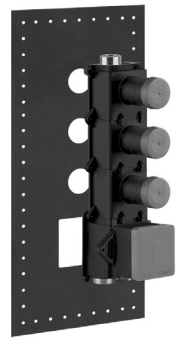

031	Chrome	2.197

39754

TRIM PARTS ONLY External parts for thermostatic with 3 volume controls
- Single backplate
- High Capacity
- 3/4" connections
- Vertical/horizontal application
- Anti-scalding
- Requires in-wall rough valve 39695



031	Chrome	2.277	735	Warm Bronze PVD	3.371
149	Finox Br. Nickel	3.076	726	Warm Bronze Br. PVD	3.600
299	Matte Black	3.076	710	Brass PVD	3.371
147	Chrome Br.	3.076	727	Brass Br. PVD	3.600
720	Nickel PVD	3.371	187	Aged Bronze	3.600
706	Black Metal PVD	3.371	713	Antique Brass	3.600
707	Black Metal Br. PVD	3.600	845	Dark Bronze	3.600
030	Copper PVD	3.371	279	Matte White	3.076
708	Copper Br. PVD	3.600			

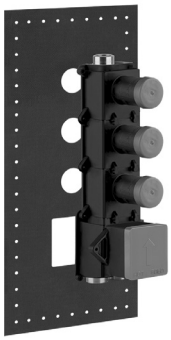

39695

In-wall thermostatic rough valve with 3 volume controls
- High capacity
- 3/4” connections
- Vertical/Horizontal application
- Anti-scalding

031	Chrome	2.197

39695+39646

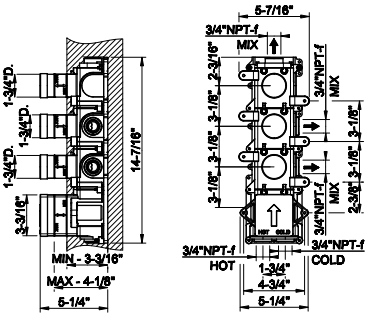



39646

TRIM PARTS ONLY External parts for thermostatic with 3 volume controls
- Separate backplate
- High Capacity
- 3/4” connections
- Vertical/horizontal application
- Anti-scalding
- Requires in-wall rough valve 39695

031	Chrome	2.498	735	Warm Bronze PVD	4.502
149	Finox Br. Nickel	4.107	726	Warm Bronze Br. PVD	4.805
299	Matte Black	4.107	710	Brass PVD	4.502
147	Chrome Br.	4.107	727	Brass Br. PVD	4.805
720	Nickel PVD	4.502	187	Aged Bronze	4.805
706	Black Metal PVD	4.502	713	Antique Brass	4.805
707	Black Metal Br. PVD	4.805	845	Dark Bronze	4.805
030	Copper PVD	4.502	279	Matte White	4.107
708	Copper Br. PVD	4.805			

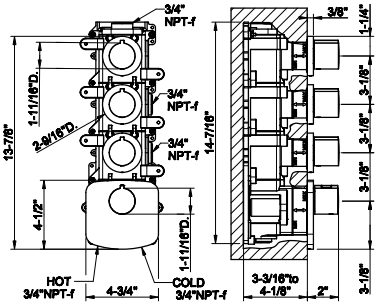

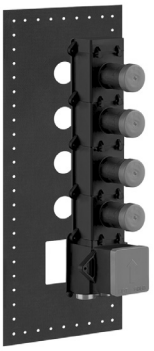

39699

In-wall thermostatic rough valve with 4 volume controls
- High capacity
- 3/4” connections
- Vertical/Horizontal application
- Anti-scalding
- Max flow rate 1.75 GPM

031	Chrome	2.498

39699+39756

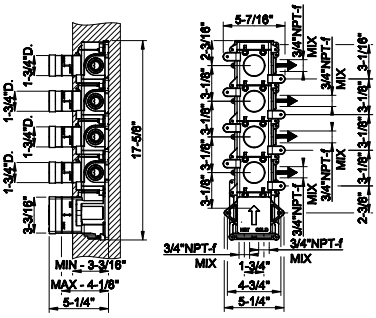



39756

TRIM PARTS ONLY External parts for thermostatic with 4 volume controls
- Single backplate
- High Capacity
- 3/4” connections
- Vertical/horizontal application
- Anti-scalding
- Requires in-wall rough valve 39699

031	Chrome	2.637	735	Warm Bronze PVD	3.904
149	Finox Br. Nickel	3.561	726	Warm Bronze Br. PVD	4.168
299	Matte Black	3.561	710	Brass PVD	3.904
147	Chrome Br.	3.561	727	Brass Br. PVD	4.168
720	Nickel PVD	3.904	187	Aged Bronze	4.168
706	Black Metal PVD	3.904	713	Antique Brass	4.168
707	Black Metal Br. PVD	4.168	845	Dark Bronze	4.168
030	Copper PVD	3.904	279	Matte White	3.561
708	Copper Br. PVD	4.168			

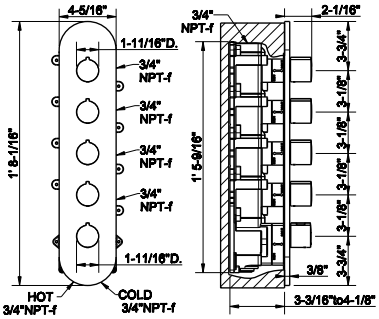

39699+39650

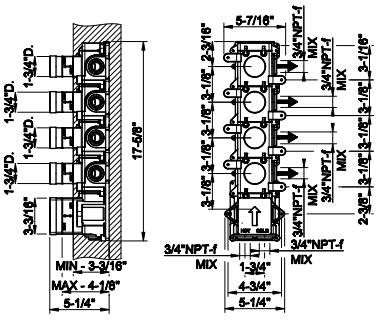

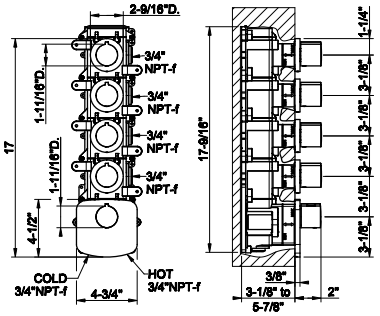

39699

In-wall thermostatic rough valve with 4 volume controls
- High capacity
- 3/4" connections
- Vertical/Horizontal application
- Anti-scalding
- Max flow rate 1.75 GPM

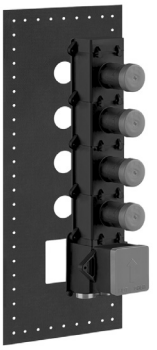

031	Chrome	2.498

39650

TRIM PARTS ONLY External parts for thermostatic with 4 volume controls
- Separate backplate
- High Capacity
- 3/4" connections
- Vertical/horizontal application
- Anti-scalding
- Requires in-wall rough valve 39699



031	Chrome	2.829	735	Warm Bronze PVD	5.381
149	Finox Br. Nickel	4.910	726	Warm Bronze Br. PVD	5.745
299	Matte Black	4.910	710	Brass PVD	5.381
147	Chrome Br.	4.910	727	Brass Br. PVD	5.745
720	Nickel PVD	5.381	187	Aged Bronze	5.745
706	Black Metal PVD	5.381	713	Antique Brass	5.745
707	Black Metal Br. PVD	5.745	845	Dark Bronze	5.745
030	Copper PVD	5.381	279	Matte White	4.910
708	Copper Br. PVD	5.745			

39601+39750

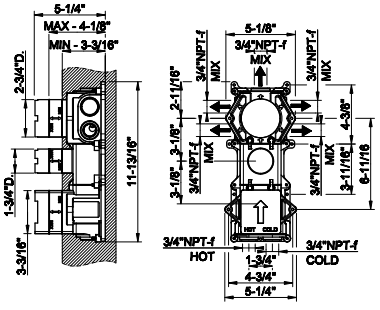

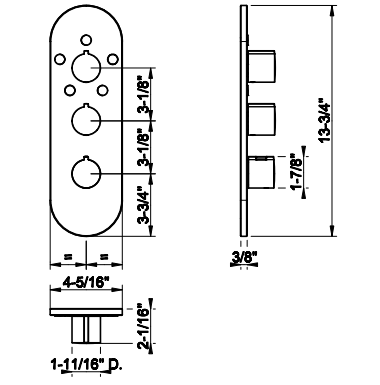

39601

In-wall thermostatic rough valve with 5-way diverter
- High capacity
- 3/4" connections
- Vertical/Horizontal application
- Anti-scalding
- Non shared function

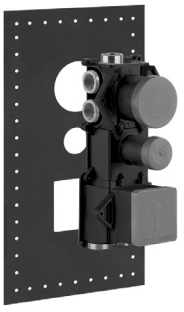

031	Chrome	2.637

39750

TRIM PARTS ONLY External parts for 5-way thermostatic diverter with volume control
- Single backplate
- High Capacity
- 3/4" connections
- Vertical/horizontal application
- Anti-scalding
- Requires in-wall rough valve 39601



031	Chrome	2.204	735	Warm Bronze PVD	3.262
149	Finox Br. Nickel	2.976	726	Warm Bronze Br. PVD	3.483
299	Matte Black	2.976	710	Brass PVD	3.262
147	Chrome Br.	2.976	727	Brass Br. PVD	3.483
720	Nickel PVD	3.262	187	Aged Bronze	3.483
706	Black Metal PVD	3.262	713	Antique Brass	3.483
707	Black Metal Br. PVD	3.483	845	Dark Bronze	3.483
030	Copper PVD	3.262	279	Matte White	2.976
708	Copper Br. PVD	3.483			

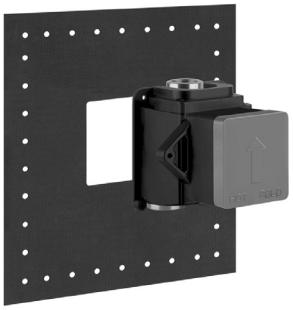

39681

In-wall thermostatic rough valve for individual mixer
- High capacity
- 3/4” connections
- Vertical/Horizontal application
- Anti-scalding

031	Chrome	1.169

39681+39666

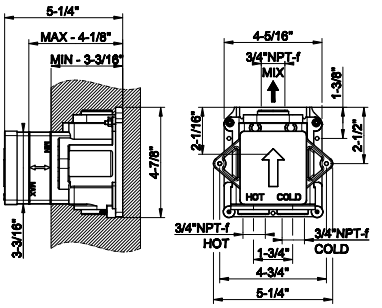

39666



TRIM PARTS ONLY External parts for individual thermostatic mixer
- High Capacity
- 3/4” connections
- Vertical/horizontal application
- Anti-scalding
- Requires in-wall rough valve 39681

031	Chrome	954	735	Warm Bronze PVD	1.811
149	Finox Br. Nickel	1.652	726	Warm Bronze Br. PVD	1.932
299	Matte Black	1.652	710	Brass PVD	1.811
147	Chrome Br.	1.652	727	Brass Br. PVD	1.932
720	Nickel PVD	1.811	187	Aged Bronze	1.932
706	Black Metal PVD	1.811	713	Antique Brass	1.932
707	Black Metal Br. PVD	1.932	845	Dark Bronze	1.932
030	Copper PVD	1.811	279	Matte White	1.652
708	Copper Br. PVD	1.932			

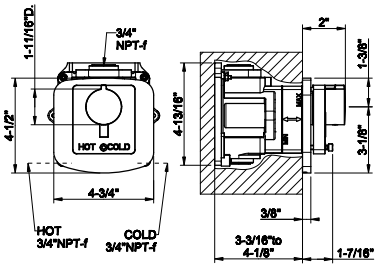

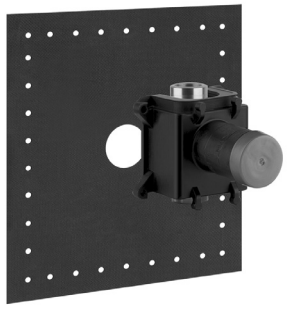

39683

In-wall thermostatic rough valve parts for volume control
- High capacity
- 3/4” connections
- Vertical/Horizontal application
- Anti-scalding

031	Chrome	582

39683+43268

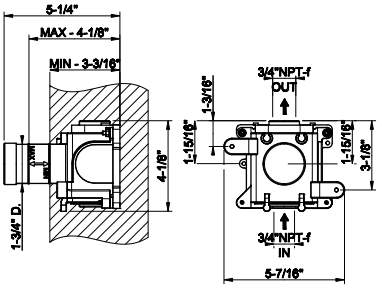

43268



TRIM PARTS ONLY External parts for individual thermostatic volume control
- Single backplate
- High Capacity
- 3/4” connections
- Vertical/horizontal application
- Anti-scalding
- Requires in-wall rough valve 39683

031	Chrome	580	735	Warm Bronze PVD	1.154
149	Finox Br. Nickel	1.054	726	Warm Bronze Br. PVD	1.231
299	Matte Black	1.054	710	Brass PVD	1.154
147	Chrome Br.	1.054	727	Brass Br. PVD	1.231
720	Nickel PVD	1.154	187	Aged Bronze	1.231
706	Black Metal PVD	1.154	713	Antique Brass	1.231
707	Black Metal Br. PVD	1.231	845	Dark Bronze	1.231
030	Copper PVD	1.154	279	Matte White	1.054
708	Copper Br. PVD	1.231			

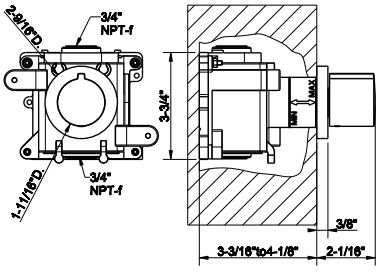

HABITO BATH&SHOWER

66156

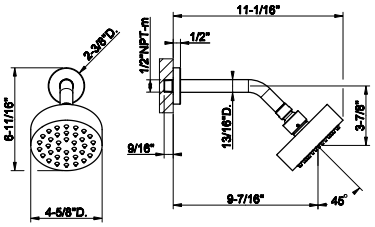

Wall-mounted adjustable shower head with arm.
- 1/2" connections.
- Projection from wall to center 9-7/16"
- Total projection 11-1/16"
- Max flow rate 1.75 GPM



031	Chrome	1.554	707	Black Metal Br. PVD	2.456
149	Finox Br. Nickel	2.098	708	Copper Br. PVD	2.456
299	Matte Black	2.098	726	Warm Bronze Br. PVD	2.456
720	Nickel PVD	2.300	727	Brass Br. PVD	2.456
706	Black Metal PVD	2.300	845	Dark Bronze	2.456

66158

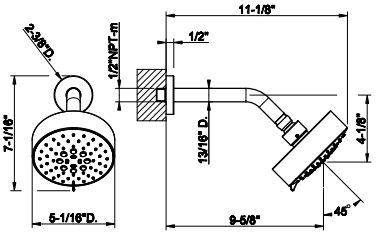

Wall-mounted adjustable multi-function shower head with arm:
- 1/2" connections
- Projection from wall to center 9-5/8"
- Total projection 11-1/8"
- Max flow rate 1.75 gpm



031	Chrome	1.907	707	Black Metal Br. PVD	3.013
149	Finox Br. Nickel	2.575	708	Copper Br. PVD	3.013
299	Matte Black	2.575	726	Warm Bronze Br. PVD	3.013
720	Nickel PVD	2.823	727	Brass Br. PVD	3.013
706	Black Metal PVD	2.823	845	Dark Bronze	3.013

66148

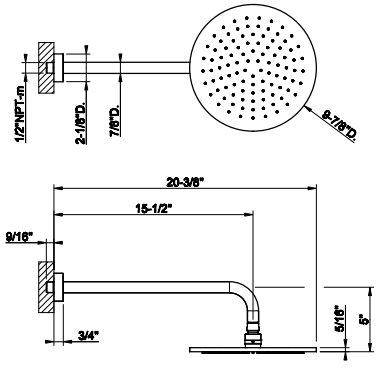

Wall-mounted adjustable shower head with arm.
- 1/2" connections.
- Projection from wall to center 15-1/2"
- Total projection 20-3/8"
- Max flow rate 1.75 GPM



031	Chrome	1.168	708	Copper Br. PVD	1.845
149	Finox Br. Nickel	1.578	735	Warm Bronze PVD	1.730
299	Matte Black	1.578	726	Warm Bronze Br. PVD	1.845
720	Nickel PVD	1.730	710	Brass PVD	1.730
706	Black Metal PVD	1.730	727	Brass Br. PVD	1.845
707	Black Metal Br. PVD	1.845	845	Dark Bronze	1.845
030	Copper PVD	1.730			

63352

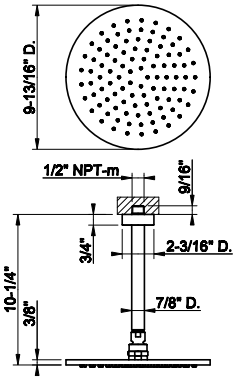

Ceiling-mounted adjustable shower head with arm.
- 1/2" connections.
- Projection from ceiling 10-1/4"
- Max flow rate 1.75 GPM



031	Chrome	966	726	Warm Bronze Br. PVD	1.528
149	Finox Br. Nickel	1.306	710	Brass PVD	1.431
299	Matte Black	1.306	727	Brass Br. PVD	1.528
720	Nickel PVD	1.431	246	Gold PVD	1.624
706	Black Metal PVD	1.431	716	Gold Br. PVD	1.624
707	Black Metal Br. PVD	1.528	187	Aged Bronze	1.528
030	Copper PVD	1.431	713	Antique Brass	1.528
708	Copper Br. PVD	1.528	845	Dark Bronze	1.528
735	Warm Bronze PVD	1.431	279	Matte White	1.306



63350

Ceiling-mounted, shower head with arm, custom length
- 1/2” connections
- Projection from ceiling MIN 3-3/8” MAX 73-1/4”
- Max flow rate 1.75 GPM

031	Chrome	1.387	726	Warm Bronze Br. PVD	2.190
149	Finox Br. Nickel	1.870	710	Brass PVD	2.052
299	Matte Black	1.870	727	Brass Br. PVD	2.190
720	Nickel PVD	2.052	246	Gold PVD	2.333
706	Black Metal PVD	2.052	716	Gold Br. PVD	2.333
707	Black Metal Br. PVD	2.190	187	Aged Bronze	2.190
030	Copper PVD	2.052	713	Antique Brass	2.190
708	Copper Br. PVD	2.190	845	Dark Bronze	2.190
735	Warm Bronze PVD	2.052	279	Matte White	1.870

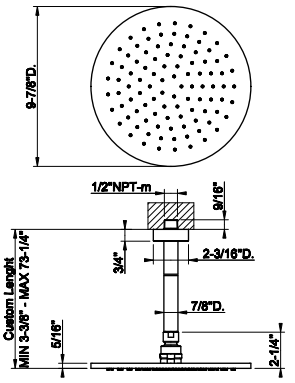



63329

Handshower set
- Fixed hook
- Wall elbow
- 59” flex hose
- Max flow rate 1.75 GPM

031	Chrome	847	735	Warm Bronze PVD	1.254
149	Finox Br. Nickel	1.141	726	Warm Bronze Br. PVD	1.337
299	Matte Black	1.141	710	Brass PVD	1.254
720	Nickel PVD	1.254	727	Brass Br. PVD	1.337
706	Black Metal PVD	1.254	187	Aged Bronze	1.337
707	Black Metal Br. PVD	1.337	713	Antique Brass	1.337
030	Copper PVD	1.254	845	Dark Bronze	1.337
708	Copper Br. PVD	1.337			

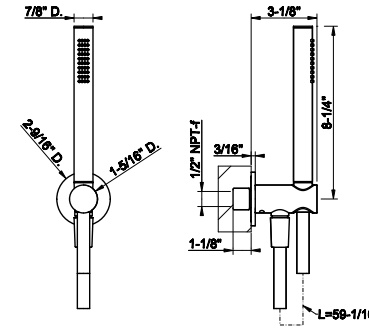



63099

Magnetic anti-limestone handshower set
- Fixed hook
- Wall elbow
- 59” Cromalux flex hose
- Max flow rate 1.75 GPM

031	Chrome	1.213	726	Warm Bronze Br. PVD	1.916
149	Finox Br. Nickel	1.638	710	Brass PVD	1.794
299	Matte Black	1.638	727	Brass Br. PVD	1.916
720	Nickel PVD	1.794	246	Gold PVD	2.037
706	Black Metal PVD	1.794	716	Gold Br. PVD	2.037
707	Black Metal Br. PVD	1.916	187	Aged Bronze	1.916
030	Copper PVD	1.794	713	Antique Brass	1.916
708	Copper Br. PVD	1.916	845	Dark Bronze	1.916
735	Warm Bronze PVD	1.794			

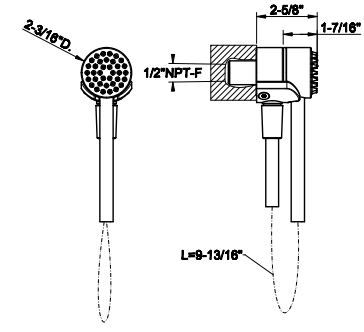



32971

Round body spray
- 1/2” connections
- Max flow rate 1 GPM at 60 PSI

031	Chrome	552	726	Warm Bronze Br. PVD	873
149	Finox Br. Nickel	746	710	Brass PVD	840
299	Matte Black	746	727	Brass Br. PVD	873
147	Chrome Br.	766	246	Gold PVD	929
720	Nickel PVD	818	716	Gold Br. PVD	929
706	Black Metal PVD	818	187	Aged Bronze	873
707	Black Metal Br. PVD	873	713	Antique Brass	873
030	Copper PVD	818	845	Dark Bronze	873
708	Copper Br. PVD	873	279	Matte White	746
735	Warm Bronze PVD	840			

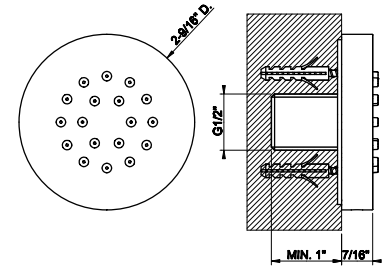

32985+32982

32985

In-wall rough valve for pivotable body spray 32982

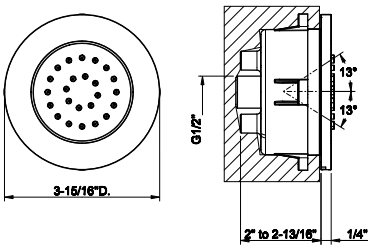



031	Chrome	406

32982

TRIM PARTS ONLY Round in-wall pivotable body spray
- 1/2" connections
- Requires in-wall rough valve 32985
- Max flow rate 1 GPM at60 PSI

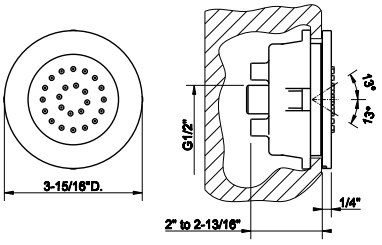



031	Chrome	773	726	Warm Bronze Br. PVD	1.223
149	Finox Br. Nickel	1.045	710	Brass PVD	1.145
299	Matte Black	1.045	727	Brass Br. PVD	1.223
147	Chrome Br.	1.045	246	Gold PVD	1.300
720	Nickel PVD	1.145	716	Gold Br. PVD	1.300
706	Black Metal PVD	1.145	187	Aged Bronze	1.223
707	Black Metal Br. PVD	1.223	713	Antique Brass	1.223
030	Copper PVD	1.145	845	Dark Bronze	1.223
708	Copper Br. PVD	1.223	279	Matte White	1.045
735	Warm Bronze PVD	1.145			

13375

Pivotable body spray
- 1/2" connections
- Max flow rate 0.9 GPM at 60 PSI

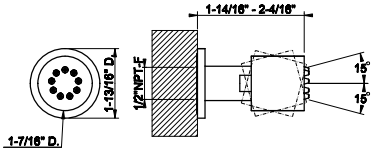



031	Chrome	405	726	Warm Bronze Br. PVD	639
149	Finox Br. Nickel	547	710	Brass PVD	598
299	Matte Black	547	727	Brass Br. PVD	639
147	Chrome Br.	547	246	Gold PVD	680
720	Nickel PVD	598	716	Gold Br. PVD	680
706	Black Metal PVD	598	187	Aged Bronze	639
707	Black Metal Br. PVD	639	713	Antique Brass	639
030	Copper PVD	598	845	Dark Bronze	639
708	Copper Br. PVD	639	279	Matte White	547
735	Warm Bronze PVD	598			

65295

Wall-fixing cascade spout
- 1/2" connections
- Flow rate 4.8 GPM at 60 PSI

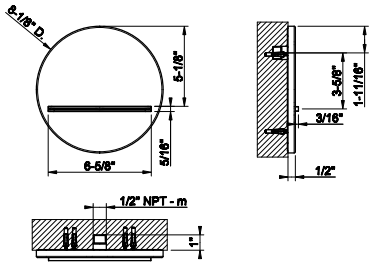

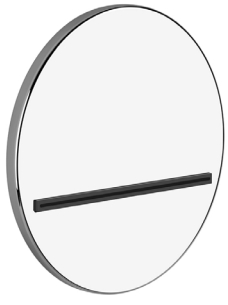

031	Chrome	1.937	726	Warm Bronze Br. PVD	3.058
149	Finox Br. Nickel	2.614	710	Brass PVD	2.864
299	Matte Black	2.614	727	Brass Br. PVD	3.058
720	Nickel PVD	2.864	246	Gold PVD	3.255
706	Black Metal PVD	2.864	716	Gold Br. PVD	3.255
707	Black Metal Br. PVD	3.058	187	Aged Bronze	3.058
030	Copper PVD	2.864	713	Antique Brass	3.058
708	Copper Br. PVD	3.058	845	Dark Bronze	3.058
735	Warm Bronze PVD	2.864	279	Matte White	2.614

20293



Wall-fixing cascade spout with separate control (not included)
- 1/2” connections
- Projection from the wall 6”
- Flow rate 4.2 GPM at 60 PSI

239	Steel Br.	2.966	726	Warm Bronze Br. PVD	4.687
238	Mirror Steel	2.966	710	Brass PVD	4.390
299	Matte Black	4.006	727	Brass Br. PVD	4.687
720	Nickel PVD	4.390	246	Gold PVD	4.985
706	Black Metal PVD	4.390	716	Gold Br. PVD	4.985
707	Black Metal Br. PVD	4.687	187	Aged Bronze	4.687
030	Copper PVD	4.390	713	Antique Brass	4.687
708	Copper Br. PVD	4.687	845	Dark Bronze	4.687
735	Warm Bronze PVD	4.390	279	Matte White	4.006

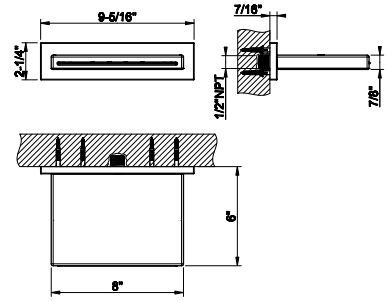

63461



Wall elbow with built in water intake and fixed hook
- 1/2” connection

031	Chrome	457	735	Warm Bronze PVD	677
149	Finox Br. Nickel	617	726	Warm Bronze Br. PVD	723
299	Matte Black	617	710	Brass PVD	677
720	Nickel PVD	677	727	Brass Br. PVD	723
706	Black Metal PVD	677	187	Aged Bronze	723
707	Black Metal Br. PVD	723	713	Antique Brass	723
030	Copper PVD	677	845	Dark Bronze	723
708	Copper Br. PVD	723			

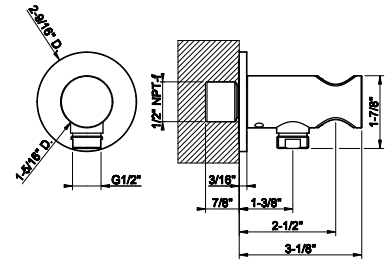

63469



Wall-elbow with backplate
- 1/2” connection

031	Chrome	298	735	Warm Bronze PVD	443
149	Finox Br. Nickel	404	726	Warm Bronze Br. PVD	472
299	Matte Black	404	710	Brass PVD	443
720	Nickel PVD	443	727	Brass Br. PVD	472
706	Black Metal PVD	443	187	Aged Bronze	472
707	Black Metal Br. PVD	472	713	Antique Brass	472
030	Copper PVD	443	845	Dark Bronze	472
708	Copper Br. PVD	472			

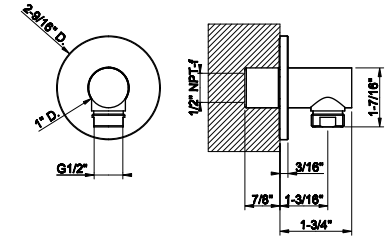

58157



Fixed handshower hook.

031	Chrome	245	726	Warm Bronze Br. PVD	387
149	Finox Br. Nickel	332	710	Brass PVD	363
299	Matte Black	332	727	Brass Br. PVD	387
720	Nickel PVD	363	246	Gold PVD	411
706	Black Metal PVD	363	716	Gold Br. PVD	411
707	Black Metal Br. PVD	387	187	Aged Bronze	387
030	Copper PVD	363	713	Antique Brass	387
708	Copper Br. PVD	387	845	Dark Bronze	387
735	Warm Bronze PVD	363			

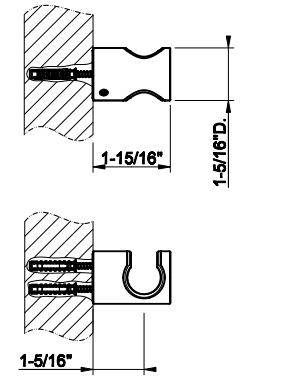

HABITO BATH&SHOWER

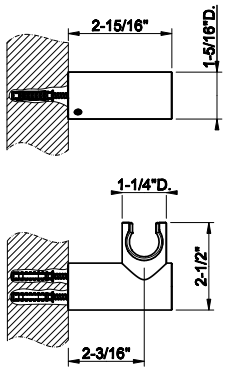

58160

Adjustable handshower hook.



031	Chrome	434	726	Warm Bronze Br. PVD	686
149	Finox Br. Nickel	586	710	Brass PVD	642
299	Matte Black	586	727	Brass Br. PVD	686
720	Nickel PVD	642	246	Gold PVD	728
706	Black Metal PVD	642	716	Gold Br. PVD	728
707	Black Metal Br. PVD	686	187	Aged Bronze	686
030	Copper PVD	642	713	Antique Brass	686
708	Copper Br. PVD	686	845	Dark Bronze	686
735	Warm Bronze PVD	642			

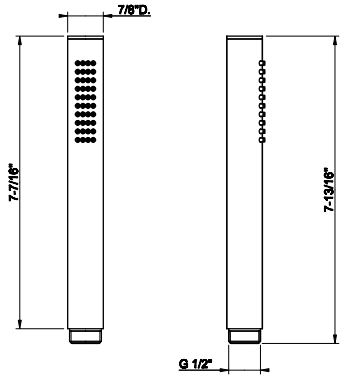

14371

Handshower
- Max flow rate 1.75 GPM



031	Chrome	268	735	Warm Bronze PVD	425
149	Finox Br. Nickel	363	726	Warm Bronze Br. PVD	450
299	Matte Black	363	710	Brass PVD	425
147	Chrome Br.	363	727	Brass Br. PVD	450
720	Nickel PVD	425	246	Gold PVD	478
706	Black Metal PVD	425	716	Gold Br. PVD	478
707	Black Metal Br. PVD	450	187	Aged Bronze	450
030	Copper PVD	425	713	Antique Brass	450
708	Copper Br. PVD	450	845	Dark Bronze	450

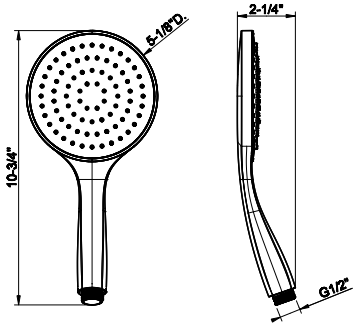

14370

Antilimestone handshower
- Single spray
- Max flow rate 1.75 GPM



031	Chrome	189	726	Warm Bronze Br. PVD	465
149	Finox Br. Nickel	377	710	Brass PVD	435
299	Matte Black	377	727	Brass Br. PVD	465
147	Chrome Br.	377	246	Gold PVD	493
720	Nickel PVD	435	716	Gold Br. PVD	493
706	Black Metal PVD	435	187	Aged Bronze	465
707	Black Metal Br. PVD	465	713	Antique Brass	465
030	Copper PVD	435	845	Dark Bronze	465
708	Copper Br. PVD	465	279	Matte White	377
735	Warm Bronze PVD	435			

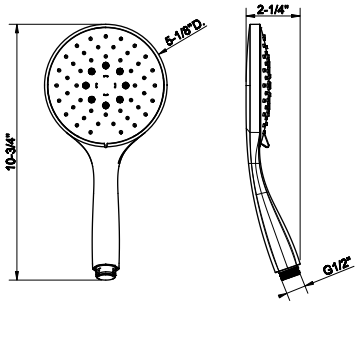

14376

Handshower with white insert
- 3-pattern spray
- Max flow rate 1.75 GPM



031	Chrome	390	726	Warm Bronze Br. PVD	656
149	Finox Br. Nickel	527	710	Brass PVD	616
299	Matte Black	527	727	Brass Br. PVD	656
147	Chrome Br.	527	246	Gold PVD	681
720	Nickel PVD	616	716	Gold Br. PVD	681
706	Black Metal PVD	616	187	Aged Bronze	656
707	Black Metal Br. PVD	656	713	Antique Brass	656
030	Copper PVD	616	845	Dark Bronze	656
708	Copper Br. PVD	656	279	Matte White	527
735	Warm Bronze PVD	616			



01637

59” flex hose

031	Chrome	134	726	Warm Bronze Br. PVD	214
149	Finox Br. Nickel	173	710	Brass PVD	203
299	Matte Black	173	727	Brass Br. PVD	214
147	Chrome Br.	173	246	Gold PVD	227
720	Nickel PVD	203	716	Gold Br. PVD	227
706	Black Metal PVD	203	187	Aged Bronze	214
707	Black Metal Br. PVD	214	713	Antique Brass	214
030	Copper PVD	203	845	Dark Bronze	214
708	Copper Br. PVD	214	279	Matte White	173
735	Warm Bronze PVD	203			

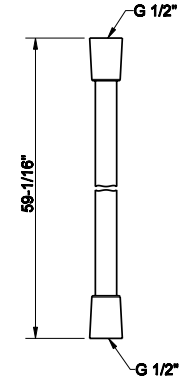



54137

59” black flex hose with options to change the metal ends with desired finish

031	Chrome	183	735	Warm Bronze PVD	290
239	Steel Br.	179	726	Warm Bronze Br. PVD	283
299	Matte Black	241	710	Brass PVD	290
720	Nickel PVD	248	727	Brass Br. PVD	283
706	Black Metal PVD	290	187	Aged Bronze	248
707	Black Metal Br. PVD	283	713	Antique Brass	248
030	Copper PVD	290	845	Dark Bronze	248
708	Copper Br. PVD	283			

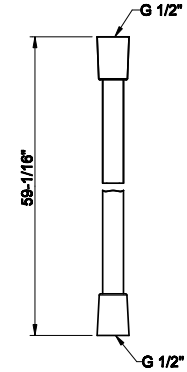



01724

Metal flexible hose, 59” length, 1/2” connector.

031	Chrome	196	726	Warm Bronze Br. PVD	308
149	Finox Br. Nickel	260	710	Brass PVD	288
299	Matte Black	260	727	Brass Br. PVD	308
147	Chrome Br.	260	246	Gold PVD	288
720	Nickel PVD	308	716	Gold Br. PVD	341
706	Black Metal PVD	288	187	Aged Bronze	308
707	Black Metal Br. PVD	308	713	Antique Brass	308
030	Copper PVD	288	845	Dark Bronze	308
708	Copper Br. PVD	308	279	Matte White	259
735	Warm Bronze PVD	288			

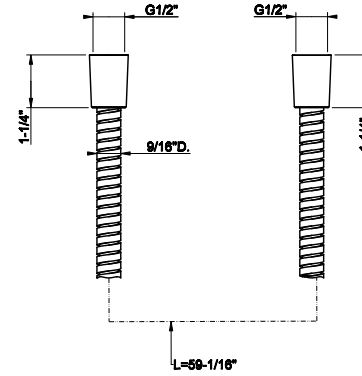


GESSI
HABITO
ACCESSORIES

66401

Wall-mounted soap dish, white

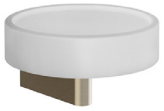

031	Chrome	439	726	Warm Bronze Br. PVD	693
149	Finox Br. Nickel	593	710	Brass PVD	648
299	Matte Black	593	727	Brass Br. PVD	693
720	Nickel PVD	648	246	Gold PVD	735
706	Black Metal PVD	648	716	Gold Br. PVD	735
707	Black Metal Br. PVD	693	187	Aged Bronze	693
030	Copper PVD	648	713	Antique Brass	693
708	Copper Br. PVD	693	845	Dark Bronze	693
735	Warm Bronze PVD	648	279	Matte White	593

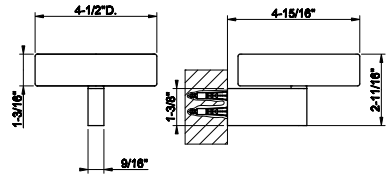

66402

Wall-mounted soap dish, black



031	Chrome	439	726	Warm Bronze Br. PVD	693
149	Finox Br. Nickel	593	710	Brass PVD	648
299	Matte Black	593	727	Brass Br. PVD	693
720	Nickel PVD	648	246	Gold PVD	735
706	Black Metal PVD	648	716	Gold Br. PVD	735
707	Black Metal Br. PVD	693	187	Aged Bronze	693
030	Copper PVD	648	713	Antique Brass	693
708	Copper Br. PVD	693	845	Dark Bronze	693
735	Warm Bronze PVD	648	279	Matte White	593

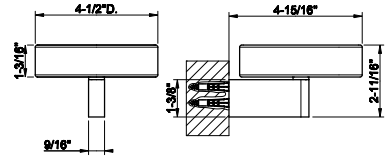

66407

Wall-mounted holder, white



031	Chrome	511	726	Warm Bronze Br. PVD	808
149	Finox Br. Nickel	690	710	Brass PVD	756
299	Matte Black	690	727	Brass Br. PVD	808
720	Nickel PVD	756	246	Gold PVD	858
706	Black Metal PVD	756	716	Gold Br. PVD	858
707	Black Metal Br. PVD	808	187	Aged Bronze	808
030	Copper PVD	756	713	Antique Brass	808
708	Copper Br. PVD	808	845	Dark Bronze	808
735	Warm Bronze PVD	756	279	Matte White	690

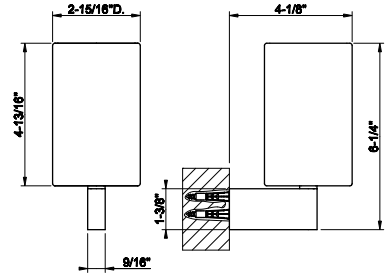

66408

Wall-mounted holder, black



031	Chrome	511	726	Warm Bronze Br. PVD	808
149	Finox Br. Nickel	690	710	Brass PVD	756
299	Matte Black	690	727	Brass Br. PVD	808
720	Nickel PVD	756	246	Gold PVD	858
706	Black Metal PVD	756	716	Gold Br. PVD	858
707	Black Metal Br. PVD	808	187	Aged Bronze	808
030	Copper PVD	756	713	Antique Brass	808
708	Copper Br. PVD	808	845	Dark Bronze	808
735	Warm Bronze PVD	756	279	Matte White	690

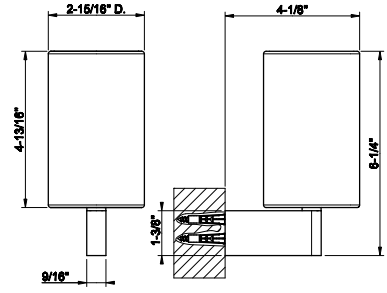

HABITO ACCESSORIES

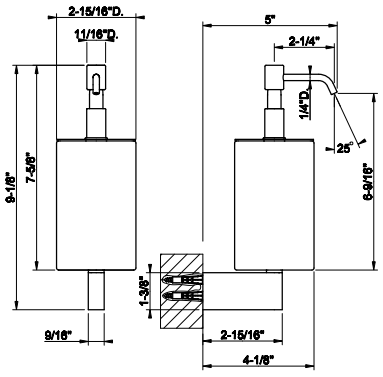

66413

Wall-mounted liquid soap dispenser , white

031	Chrome	818	726	Warm Bronze Br. PVD	1.293
149	Finox Br. Nickel	1.106	710	Brass PVD	1.210
299	Matte Black	1.106	727	Brass Br. PVD	1.293
720	Nickel PVD	1.210	246	Gold PVD	1.376
706	Black Metal PVD	1.210	716	Gold Br. PVD	1.376
707	Black Metal Br. PVD	1.293	187	Aged Bronze	1.293
030	Copper PVD	1.210	713	Antique Brass	1.293
708	Copper Br. PVD	1.293	845	Dark Bronze	1.293
735	Warm Bronze PVD	1.210	279	Matte White	1.106



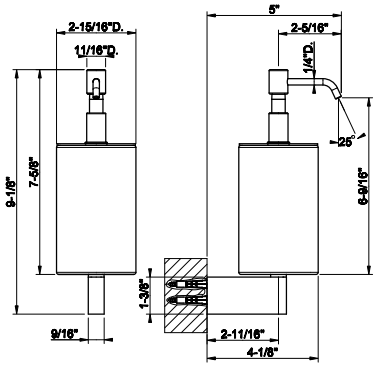

66414

Wall-mounted liquid soap dispenser - black

031	Chrome	818	726	Warm Bronze Br. PVD	1.293
149	Finox Br. Nickel	1.106	710	Brass PVD	1.210
299	Matte Black	1.106	727	Brass Br. PVD	1.293
720	Nickel PVD	1.210	246	Gold PVD	1.376
706	Black Metal PVD	1.210	716	Gold Br. PVD	1.376
707	Black Metal Br. PVD	1.293	187	Aged Bronze	1.293
030	Copper PVD	1.210	713	Antique Brass	1.293
708	Copper Br. PVD	1.293	845	Dark Bronze	1.293
735	Warm Bronze PVD	1.210	279	Matte White	1.106



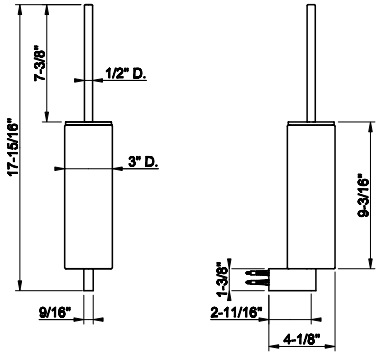

66419

Wall-mounted brush holder, white

031	Chrome	865	726	Warm Bronze Br. PVD	1.368
149	Finox Br. Nickel	1.170	710	Brass PVD	1.283
299	Matte Black	1.170	727	Brass Br. PVD	1.368
720	Nickel PVD	1.283	246	Gold PVD	1.455
706	Black Metal PVD	1.283	716	Gold Br. PVD	1.455
707	Black Metal Br. PVD	1.368	187	Aged Bronze	1.368
030	Copper PVD	1.283	713	Antique Brass	1.368
708	Copper Br. PVD	1.368	845	Dark Bronze	1.368
735	Warm Bronze PVD	1.283	279	Matte White	1.170



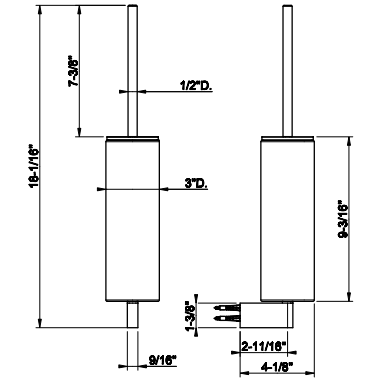

66420

Wall-mounted brush holder, black

031	Chrome	865	726	Warm Bronze Br. PVD	1.368
149	Finox Br. Nickel	1.170	710	Brass PVD	1.283
299	Matte Black	1.170	727	Brass Br. PVD	1.368
720	Nickel PVD	1.283	246	Gold PVD	1.455
706	Black Metal PVD	1.283	716	Gold Br. PVD	1.455
707	Black Metal Br. PVD	1.368	187	Aged Bronze	1.368
030	Copper PVD	1.283	713	Antique Brass	1.368
708	Copper Br. PVD	1.368	845	Dark Bronze	1.368
735	Warm Bronze PVD	1.283	279	Matte White	1.170



58525

Standing soap holder, white



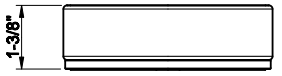

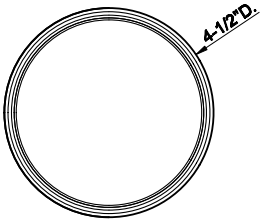

031	Chrome	391	726	Warm Bronze Br. PVD	618
149	Finox Br. Nickel	528	710	Brass PVD	580
299	Matte Black	528	727	Brass Br. PVD	618
720	Nickel PVD	580	246	Gold PVD	658
706	Black Metal PVD	580	716	Gold Br. PVD	658
707	Black Metal Br. PVD	618	187	Aged Bronze	618
030	Copper PVD	580	713	Antique Brass	618
708	Copper Br. PVD	618	845	Dark Bronze	618
735	Warm Bronze PVD	580	279	Matte White	528

58526

Standing soap holder, black



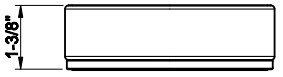

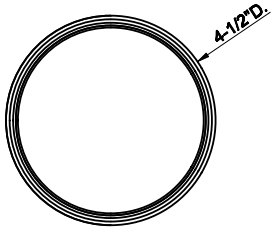

031	Chrome	391	726	Warm Bronze Br. PVD	618
149	Finox Br. Nickel	528	710	Brass PVD	580
299	Matte Black	528	727	Brass Br. PVD	618
720	Nickel PVD	580	246	Gold PVD	658
706	Black Metal PVD	580	716	Gold Br. PVD	658
707	Black Metal Br. PVD	618	187	Aged Bronze	618
030	Copper PVD	580	713	Antique Brass	618
708	Copper Br. PVD	618	845	Dark Bronze	618
735	Warm Bronze PVD	580	279	Matte White	528

58531

Standing tumbler holder, white



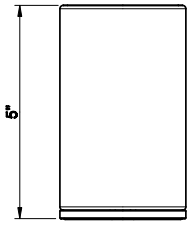

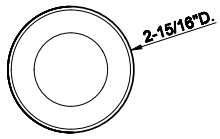

031	Chrome	436	726	Warm Bronze Br. PVD	689
149	Finox Br. Nickel	590	710	Brass PVD	647
299	Matte Black	590	727	Brass Br. PVD	689
720	Nickel PVD	647	246	Gold PVD	733
706	Black Metal PVD	647	716	Gold Br. PVD	733
707	Black Metal Br. PVD	689	187	Aged Bronze	689
030	Copper PVD	647	713	Antique Brass	689
708	Copper Br. PVD	689	845	Dark Bronze	689
735	Warm Bronze PVD	647	279	Matte White	590

58532

Standing tumbler holder, black



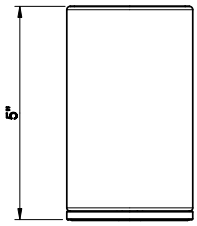

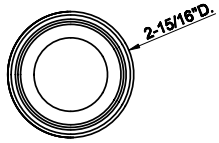

031	Chrome	436	726	Warm Bronze Br. PVD	689
149	Finox Br. Nickel	590	710	Brass PVD	647
299	Matte Black	590	727	Brass Br. PVD	689
720	Nickel PVD	647	246	Gold PVD	733
706	Black Metal PVD	647	716	Gold Br. PVD	733
707	Black Metal Br. PVD	689	187	Aged Bronze	689
030	Copper PVD	647	713	Antique Brass	689
708	Copper Br. PVD	689	845	Dark Bronze	689
735	Warm Bronze PVD	647	279	Matte White	590

HABITO ACCESSORIES

66437

Standing soap dispenser holder, white

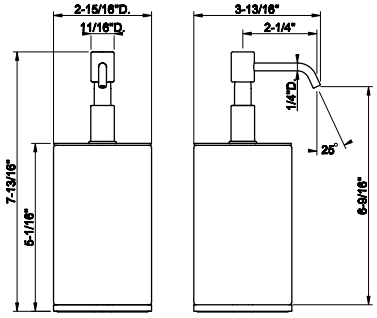



031	Chrome	726	726	Warm Bronze Br. PVD	1.148
149	Finox Br. Nickel	980	710	Brass PVD	1.076
299	Matte Black	980	727	Brass Br. PVD	1.148
720	Nickel PVD	1.076	246	Gold PVD	1.221
706	Black Metal PVD	1.076	716	Gold Br. PVD	1.221
707	Black Metal Br. PVD	1.148	187	Aged Bronze	1.148
030	Copper PVD	1.076	713	Antique Brass	1.148
708	Copper Br. PVD	1.148	845	Dark Bronze	1.148
735	Warm Bronze PVD	1.076	279	Matte White	980

66438

Standing soap dispenser holder, black

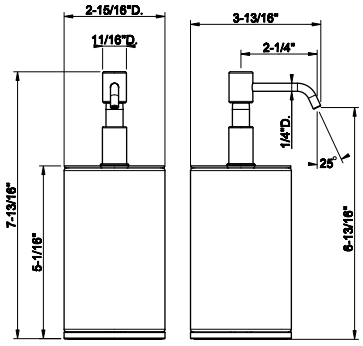



031	Chrome	726	726	Warm Bronze Br. PVD	1.148
149	Finox Br. Nickel	980	710	Brass PVD	1.076
299	Matte Black	980	727	Brass Br. PVD	1.148
720	Nickel PVD	1.076	246	Gold PVD	1.221
706	Black Metal PVD	1.076	716	Gold Br. PVD	1.221
707	Black Metal Br. PVD	1.148	187	Aged Bronze	1.148
030	Copper PVD	1.076	713	Antique Brass	1.148
708	Copper Br. PVD	1.148	845	Dark Bronze	1.148
735	Warm Bronze PVD	1.076	279	Matte White	980

58543

Standing brush holder, white

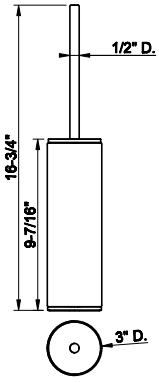



031	Chrome	848	726	Warm Bronze Br. PVD	1.340
149	Finox Br. Nickel	1.145	710	Brass PVD	1.256
299	Matte Black	1.145	727	Brass Br. PVD	1.340
720	Nickel PVD	1.256	246	Gold PVD	1.424
706	Black Metal PVD	1.256	716	Gold Br. PVD	1.424
707	Black Metal Br. PVD	1.340	187	Aged Bronze	1.340
030	Copper PVD	1.256	713	Antique Brass	1.340
708	Copper Br. PVD	1.340	845	Dark Bronze	1.340
735	Warm Bronze PVD	1.256	279	Matte White	1.145

58544

Standing brush holder, black

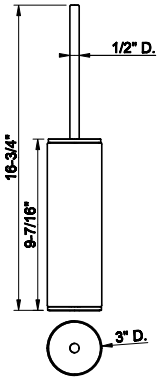



031	Chrome	848	726	Warm Bronze Br. PVD	1.340
149	Finox Br. Nickel	1.145	710	Brass PVD	1.256
299	Matte Black	1.145	727	Brass Br. PVD	1.340
720	Nickel PVD	1.141	246	Gold PVD	1.424
706	Black Metal PVD	1.256	716	Gold Br. PVD	1.424
707	Black Metal Br. PVD	1.340	187	Aged Bronze	1.340
030	Copper PVD	1.256	713	Antique Brass	1.340
708	Copper Br. PVD	1.340	845	Dark Bronze	1.340
735	Warm Bronze PVD	1.256	279	Matte White	1.145

66455

Horizontal/Vertical paper-roll holder



031	Chrome	401	726	Warm Bronze Br. PVD	633
149	Finox Br. Nickel	541	710	Brass PVD	593
299	Matte Black	541	727	Brass Br. PVD	633
720	Nickel PVD	593	246	Gold PVD	673
706	Black Metal PVD	593	716	Gold Br. PVD	673
707	Black Metal Br. PVD	633	187	Aged Bronze	633
030	Copper PVD	593	713	Antique Brass	633
708	Copper Br. PVD	633	845	Dark Bronze	633
735	Warm Bronze PVD	593	279	Matte White	541

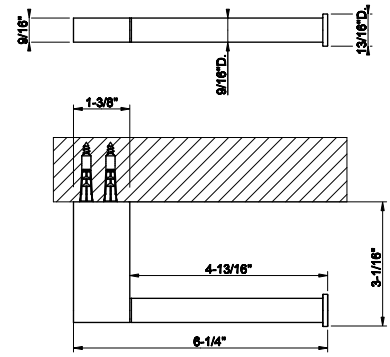

66500

12" Towel rail



031	Chrome	520	726	Warm Bronze Br. PVD	823
149	Finox Br. Nickel	703	710	Brass PVD	771
299	Matte Black	703	727	Brass Br. PVD	823
720	Nickel PVD	771	246	Gold PVD	876
706	Black Metal PVD	771	716	Gold Br. PVD	876
707	Black Metal Br. PVD	823	187	Aged Bronze	823
030	Copper PVD	771	713	Antique Brass	823
708	Copper Br. PVD	823	845	Dark Bronze	823
735	Warm Bronze PVD	771	279	Matte White	703

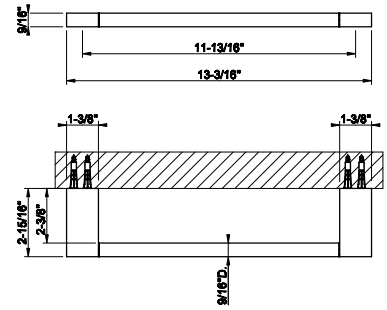

66502

18" Towel rail



031	Chrome	556	726	Warm Bronze Br. PVD	878
149	Finox Br. Nickel	750	710	Brass PVD	823
299	Matte Black	750	727	Brass Br. PVD	878
720	Nickel PVD	823	246	Gold PVD	933
706	Black Metal PVD	823	716	Gold Br. PVD	933
707	Black Metal Br. PVD	878	187	Aged Bronze	878
030	Copper PVD	823	713	Antique Brass	878
708	Copper Br. PVD	878	845	Dark Bronze	878
735	Warm Bronze PVD	823	279	Matte White	750

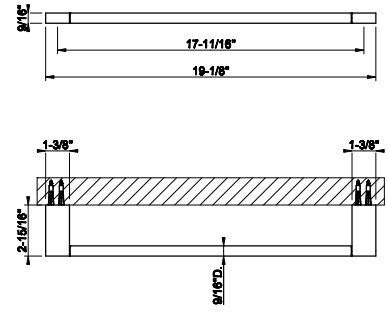

66504

24" Towel rail



031	Chrome	590	726	Warm Bronze Br. PVD	933
149	Finox Br. Nickel	799	710	Brass PVD	876
299	Matte Black	799	727	Brass Br. PVD	933
720	Nickel PVD	876	246	Gold PVD	993
706	Black Metal PVD	876	716	Gold Br. PVD	993
707	Black Metal Br. PVD	933	187	Aged Bronze	933
030	Copper PVD	876	713	Antique Brass	933
708	Copper Br. PVD	933	845	Dark Bronze	933
735	Warm Bronze PVD	876	279	Matte White	799

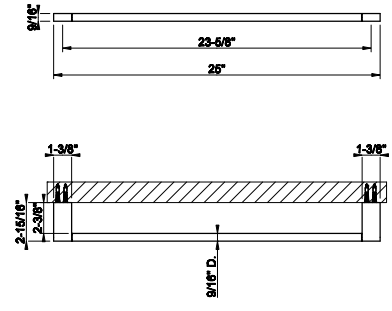

HABITO ACCESSORIES

66523

Wall mounted garment hook, UNITO

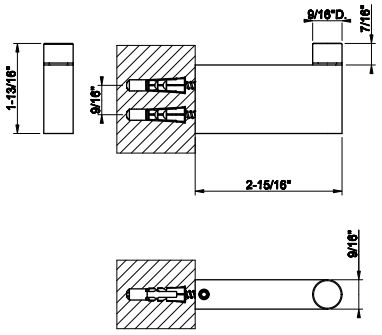



031	Chrome	266	726	Warm Bronze Br. PVD	421
149	Finox Br. Nickel	360	710	Brass PVD	394
299	Matte Black	360	727	Brass Br. PVD	421
720	Nickel PVD	394	246	Gold PVD	448
706	Black Metal PVD	394	716	Gold Br. PVD	448
707	Black Metal Br. PVD	421	187	Aged Bronze	421
030	Copper PVD	394	713	Antique Brass	421
708	Copper Br. PVD	421	845	Dark Bronze	421
735	Warm Bronze PVD	394	279	Matte White	360

70323

Wall mounted garment hook, TRAME

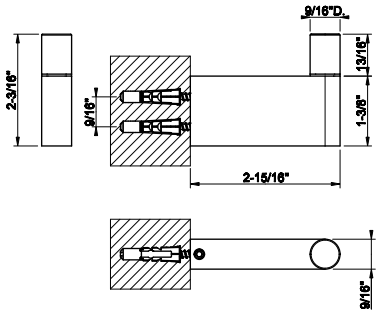



031	Chrome	324	735	Warm Bronze PVD	479
149	Finox Br. Nickel	439	726	Warm Bronze Br. PVD	511
706	Black Metal PVD	479	710	Brass PVD	479
707	Black Metal Br. PVD	511	727	Brass Br. PVD	511
708	Copper Br. PVD	511			

70123

Wall mounted garment hook, INTRECCIO

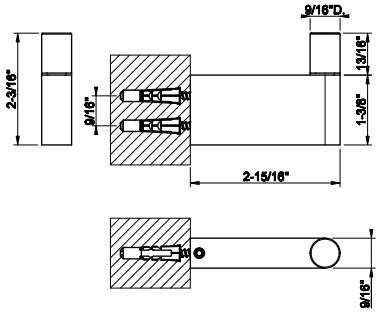



031	Chrome	324	735	Warm Bronze PVD	479
149	Finox Br. Nickel	439	726	Warm Bronze Br. PVD	511
299	Matte Black	439	710	Brass PVD	479
706	Black Metal PVD	479	727	Brass Br. PVD	511
707	Black Metal Br. PVD	511	845	Dark Bronze	511
708	Copper Br. PVD	511			

70523

Wall mounted garment hook, RIGATO

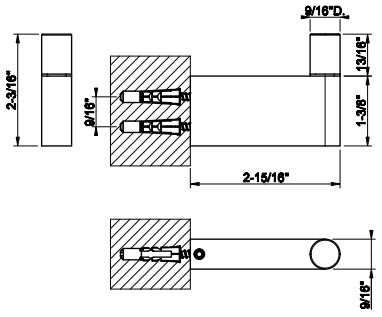



031	Chrome	324	735	Warm Bronze PVD	479
149	Finox Br. Nickel	439	726	Warm Bronze Br. PVD	511
299	Matte Black	439	710	Brass PVD	479
706	Black Metal PVD	479	727	Brass Br. PVD	511
707	Black Metal Br. PVD	511	845	Dark Bronze	511
708	Copper Br. PVD	511			

70623

Wall mounted garment hook, DIAMANTATO



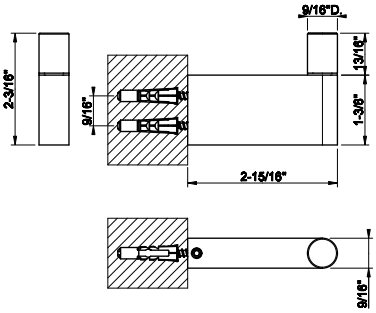

031	Chrome	324	735	Warm Bronze PVD	479
149	Finox Br. Nickel	439	726	Warm Bronze Br. PVD	511
299	Matte Black	439	710	Brass PVD	479
706	Black Metal PVD	479	727	Brass Br. PVD	511
707	Black Metal Br. PVD	511	845	Dark Bronze	511
708	Copper Br. PVD	511			

70423

Wall mounted garment hook, CESELLO



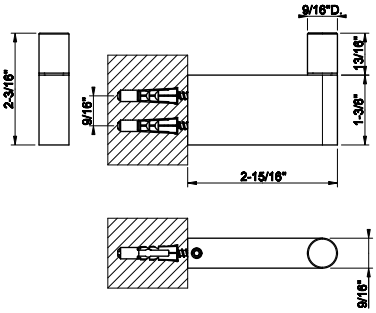

031	Chrome	324	735	Warm Bronze PVD	479
149	Finox Br. Nickel	439	726	Warm Bronze Br. PVD	511
299	Matte Black	439	710	Brass PVD	479
706	Black Metal PVD	479	727	Brass Br. PVD	511
707	Black Metal Br. PVD	511	845	Dark Bronze	511
708	Copper Br. PVD	511			

66511

12” Towel rail for glass fixing



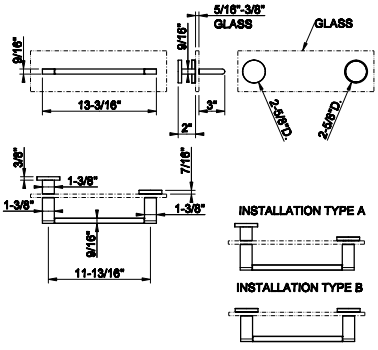

031	Chrome	1.333	726	Warm Bronze Br. PVD	2.107
149	Finox Br. Nickel	1.800	710	Brass PVD	1.973
299	Matte Black	1.800	727	Brass Br. PVD	2.107
720	Nickel PVD	1.973	246	Gold PVD	2.240
706	Black Metal PVD	1.973	716	Gold Br. PVD	2.240
707	Black Metal Br. PVD	2.107	187	Aged Bronze	2.107
030	Copper PVD	1.973	713	Antique Brass	2.107
708	Copper Br. PVD	2.107	845	Dark Bronze	2.107
735	Warm Bronze PVD	1.973	279	Matte White	1.800

66513

18” Towel rail for glass fixing



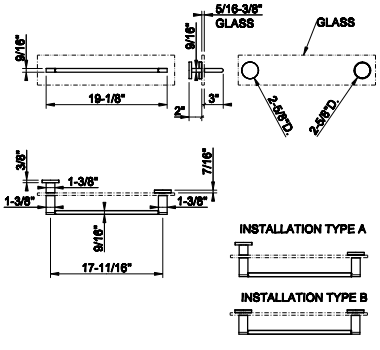

031	Chrome	1.581	726	Warm Bronze Br. PVD	2.497
149	Finox Br. Nickel	2.135	710	Brass PVD	2.340
299	Matte Black	2.135	727	Brass Br. PVD	2.497
720	Nickel PVD	2.340	246	Gold PVD	2.655
706	Black Metal PVD	2.340	716	Gold Br. PVD	2.655
707	Black Metal Br. PVD	2.497	187	Aged Bronze	2.497
030	Copper PVD	2.340	713	Antique Brass	2.497
708	Copper Br. PVD	2.497	845	Dark Bronze	2.497
735	Warm Bronze PVD	2.340	279	Matte White	2.135

66515

24” Towel rail for glass fixing

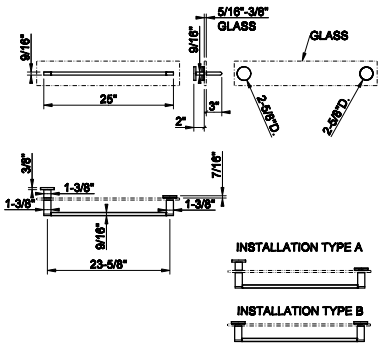

031	Chrome	1.617	726	Warm Bronze Br. PVD	2.557
149	Finox Br. Nickel	2.185	710	Brass PVD	2.395
299	Matte Black	2.185	727	Brass Br. PVD	2.557
720	Nickel PVD	2.395	246	Gold PVD	2.717
706	Black Metal PVD	2.395	716	Gold Br. PVD	2.717
707	Black Metal Br. PVD	2.557	187	Aged Bronze	2.557
030	Copper PVD	2.395	713	Antique Brass	2.557
708	Copper Br. PVD	2.557	845	Dark Bronze	2.557
735	Warm Bronze PVD	2.395	279	Matte White	2.185



58424

Safety grip-handle for bathtub and shower enclosure
• 18” length

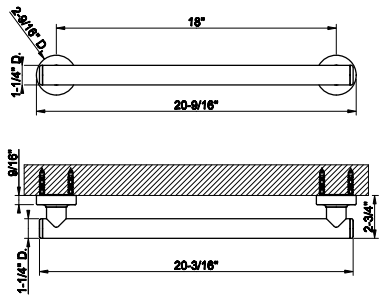

031	Chrome	1.932	726	Warm Bronze Br. PVD	3.054
149	Finox Br. Nickel	2.611	710	Brass PVD	2.862
299	Matte Black	2.611	727	Brass Br. PVD	3.056
720	Nickel PVD	2.862	246	Gold PVD	3.243
706	Black Metal PVD	2.862	716	Gold Br. PVD	3.243
707	Black Metal Br. PVD	3.056	845	Aged Bronze	3.056
030	Copper PVD	2.862	187	Antique Brass	3.056
708	Copper Br. PVD	3.056	713	Dark Bronze	3.056
735	Warm Bronze PVD	2.862	279	Matte White	2.611



58430

Safety grip-handle for bathtub and shower enclosure
• 24” length

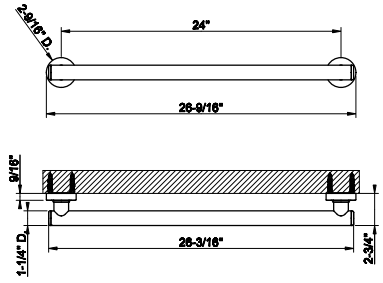

031	White Ceramic	1.967	726	Chrome	3.108
149	Matt White Ceramic	2.656	710	Matte Black	2.911
299	Matt Black Ceramic	2.656	727	Matte White	3.108
720	White Ceramic	2.911	246	Chrome	3.304
706	Matt White Ceramic	2.911	716	Steel Br.	3.304
707	Matt Black Ceramic	3.108	845	Finox Br. Nickel	3.108
030	White Ceramic	2.911	187	Matte Black	3.108
708	Matt White Ceramic	3.108	713	Chrome Br.	3.108
735	Matt Black Ceramic	2.911	279	Nickel PVD	2.656



58432

Safety grip-handle for bathtub and shower enclosure
• 36” length

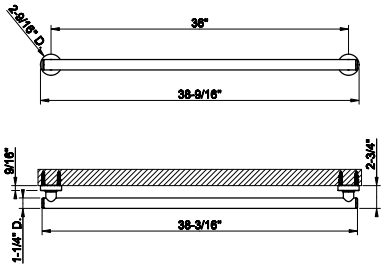

031	Black Metal PVD	2.165	726	Gold Br. PVD	3.419
149	Black Metal Br. PVD	2.921	710	Aged Bronze	3.203
299	Copper PVD	2.921	727	Antique Brass	3.419
720	Copper Br. PVD	3.203	246	Matte White	3.637
706	Warm Bronze PVD	3.203	716	Chrome	3.637
707	Warm Bronze Br. PVD	3.419	845	Matte Black	3.419
030	Brass PVD	3.203	187	Matte White	3.419
708	Brass Br. PVD	3.419	713	Chrome	3.419
735	Gold PVD	3.203	279	Finox Br. Nickel	2.921





45590

White waste-paper basket

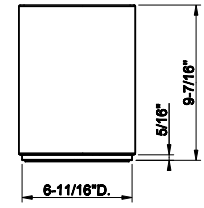

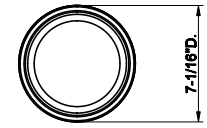

031	Matte Black	1.056	726	Brass PVD	1.663
149	Chrome Br.	1.369	710	Brass Br. PVD	1.559
299	Nickel PVD	1.316	727	Gold PVD	1.663
720	Black Metal PVD	1.559	246	Gold Br. PVD	1.775
706	Black Metal Br. PVD	1.559	716	Aged Bronze	1.775
707	Copper PVD	1.663	845	Antique Brass	1.663
030	Copper Br. PVD	1.559	187	Matte White	1.663
708	Warm Bronze PVD	1.663	713	White Ceramic	1.663
735	Warm Bronze Br. PVD	1.559	279	Matt White Ceramic	1.316


GESSI
HABITO
TOTAL LOOK



54611

Flush Actuator Plate
•Stainless steel
•Compatible with GEBERIT models: 111.597.001, 111.902.005, 111.798.00.1, 111.335.00.5
•Without visible fixing system

031	Chrome	1.228	708	Copper Br. PVD	1.813
239	Steel Br.	1.228	735	Warm Bronze PVD	1.813
275	Matte Cipria	1.653	726	Warm Bronze Br. PVD	1.813
273	Matte Greige	1.653	710	Brass PVD	1.813
280	Matte Ocra	1.653	727	Brass Br. PVD	1.813
281	Matte Coral	1.653	246	Gold PVD	2.058
276	Matte Agave	1.653	716	Gold Br. PVD	2.058
299	Matte Black	1.653	187	Aged Bronze	1.813
720	Nickel PVD	1.813	713	Antique Brass	1.813
706	Black Metal PVD	1.813	845	Dark Bronze	1.813
707	Black Metal Br. PVD	1.813	279	Matte White	1.653
030	Copper PVD	1.813			

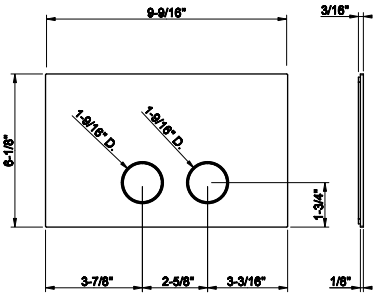

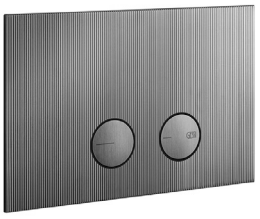

54671

Flush Actuator Plate RIGATO
•Stainless steel
•Compatible with GEBERIT models: 111.597.001, 111.902.005, 111.798.00.1, 111.335.00.5
•Without visible fixing system

031	Chrome	2.585	708	Copper Br. PVD	4.082
149	Finox Br. Nickel	3.490	735	Warm Bronze PVD	3.824
299	Matte Black	3.490	726	Warm Bronze Br. PVD	4.082
720	Nickel PVD	3.824	710	Brass PVD	3.824
706	Black Metal PVD	3.824	727	Brass Br. PVD	4.082
707	Black Metal Br. PVD	4.082	187	Aged Bronze	4.082
030	Copper PVD	3.824	713	Antique Brass	4.082

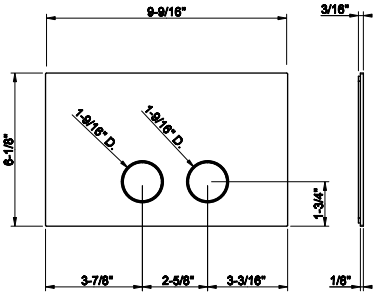

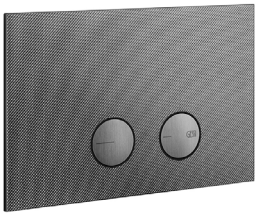

54681

Flush Actuator Plate DIAMANTATO
•Stainless steel
•Compatible with GEBERIT models: 111.597.001, 111.902.005, 111.798.00.1, 111.335.00.5
•Without visible fixing system

031	Chrome	2.585	708	Copper Br. PVD	4.082
149	Finox Br. Nickel	3.490	735	Warm Bronze PVD	3.824
299	Matte Black	3.490	726	Warm Bronze Br. PVD	4.082
720	Nickel PVD	3.824	710	Brass PVD	3.824
706	Black Metal PVD	3.824	727	Brass Br. PVD	4.082
707	Black Metal Br. PVD	4.082	187	Aged Bronze	4.082
030	Copper PVD	3.824	713	Antique Brass	4.082

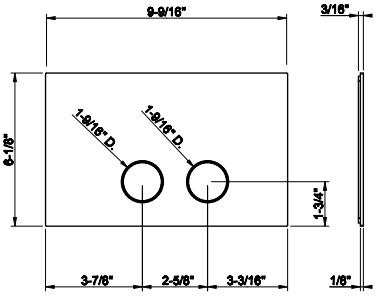



54601

Counter washbasin In stainless steel, without overflow waste. Without basin waste. It can be combined with waste 54597.

239	Steel Br.	2.449	708	Copper Br. PVD	6.986
299	Matte Black	4.431	726	Warm Bronze Br. PVD	6.986
707	Black Metal Br. PVD	6.986	727	Brass Br. PVD	6.986

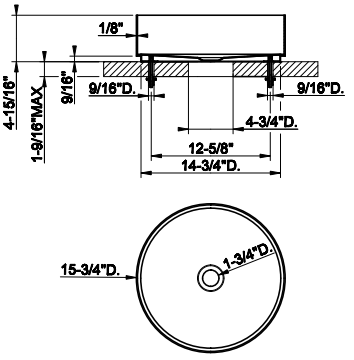

HABITO TOTAL LOOK

01578

Undermounted washbasin brackets for 54601, 54605, 54606.

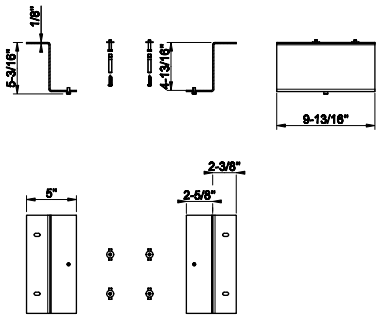



031	Chrome	428

54597

1 1/4" push drain with or without overflow feature
- Recommended for Gessi 316 Collection

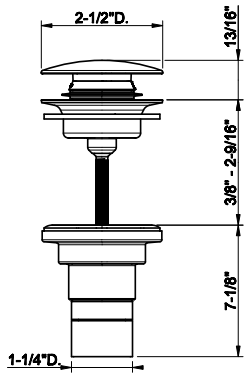



239	Steel Br.	212	708	Copper Br. PVD	313
299	Matte Black	287	726	Warm Bronze Br. PVD	313
707	Black Metal Br. PVD	313	727	Brass Br. PVD	313

01427

1 1/4" push drain with or without overflow feature

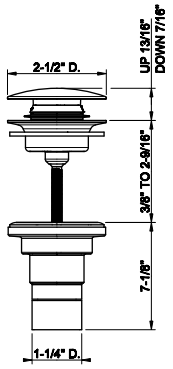



031	Chrome	134	030	Copper PVD	379
239	Steel Br.	134	708	Copper Br. PVD	379
275	Matte Cipria	326	735	Warm Bronze PVD	379
273	Matte Greige	326	726	Warm Bronze Br. PVD	379
277	Glossy Ocra	326	710	Brass PVD	379
278	Glossy Coral	326	727	Brass Br. PVD	379
276	Matte Agave	326	246	Gold PVD	405
299	Matte Black	386	716	Gold Br. PVD	405
720	Nickel PVD	379	187	Aged Bronze	379
706	Black Metal PVD	379	713	Antique Brass	379
707	Black Metal Br. PVD	379	845	Dark Bronze	379


GESSI
RETTANGOLO K
THE ICON GENERATES A NEW WORK OF ART

53001



Single lever washbasin mixer with pop-up assembly
- Spout projection 5”
- Height 6-1/16”
- 1-1/4” D. pop-up drain and flexible hoses with 9/16” – 24 UNEF connections
- Max flow rate 1.2 GPM
- ADA compliant

031	Chrome	1.114	030	Copper PVD	1.647
149	Finox Br. Nickel	1.504	708	Copper Br. PVD	1.759
299	Matte Black	1.504	735	Warm Bronze PVD	1.647
720	Nickel PVD	1.647	726	Warm Bronze Br. PVD	1.759
706	Black Metal PVD	1.647	710	Brass PVD	1.647
707	Black Metal Br. PVD	1.759	727	Brass Br. PVD	1.759

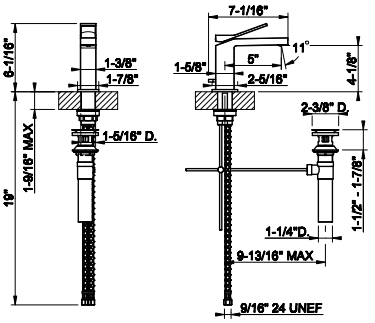

53002



Single lever washbasin mixer without pop-up assembly
- Spout projection 5”
- Height 6-1/16”
- Drain not included - See DRAINS section
- Max flow rate 1.2 GPM
- ADA compliant

031	Chrome	1.070	030	Copper PVD	1.582
149	Finox Br. Nickel	1.444	708	Copper Br. PVD	1.690
299	Matte Black	1.444	735	Warm Bronze PVD	1.582
720	Nickel PVD	1.582	726	Warm Bronze Br. PVD	1.690
706	Black Metal PVD	1.582	710	Brass PVD	1.582
707	Black Metal Br. PVD	1.690	727	Brass Br. PVD	1.690

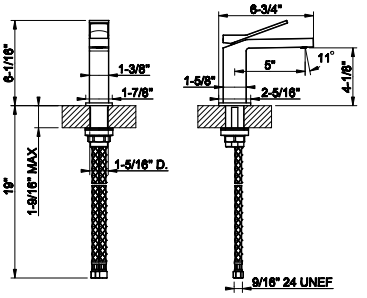

53006



Tall single lever washbasin mixer without pop-up assembly
- Spout projection 5”
- Height 11-13/16”
- Drain not included - See DRAINS section
- Max flow rate 1.2 GPM
- ADA compliant

031	Chrome	1.302	030	Copper PVD	1.927
149	Finox Br. Nickel	1.758	708	Copper Br. PVD	2.058
299	Matte Black	1.758	735	Warm Bronze PVD	1.927
720	Nickel PVD	1.927	726	Warm Bronze Br. PVD	2.058
706	Black Metal PVD	1.927	710	Brass PVD	1.927
707	Black Metal Br. PVD	2.058	727	Brass Br. PVD	2.058

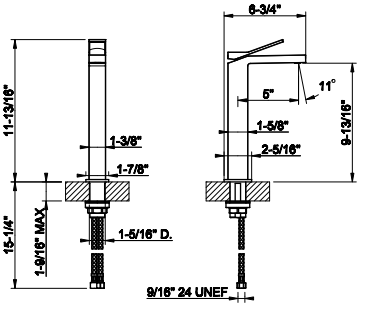

53004



Tall single lever washbasin mixer without pop-up assembly
- Extended spout projection 8-1/4”
- Height 11-13/16”
- Drain not included - See DRAINS section
- Max flow rate 1.2 GPM
- ADA compliant

031	Chrome	1.302	030	Copper PVD	1.927
149	Finox Br. Nickel	1.758	708	Copper Br. PVD	2.058
299	Matte Black	1.758	735	Warm Bronze PVD	1.927
720	Nickel PVD	1.927	726	Warm Bronze Br. PVD	2.058
706	Black Metal PVD	1.927	710	Brass PVD	1.927
707	Black Metal Br. PVD	2.058	727	Brass Br. PVD	2.058

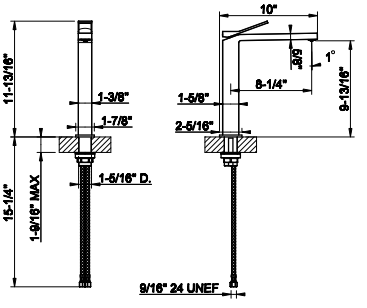

RETTANGOLO K

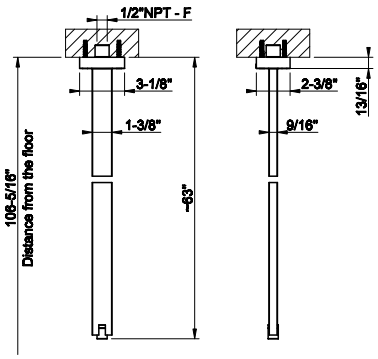

26599

Ceiling-mounted washbasin spout only
- Spout length 63”
- Drain not included - See DRAINS section
- Requires mixer control
- Max flow rate 1.2 GPM



031	Chrome	1.912	030	Copper PVD	2.828
149	Finox Br. Nickel	2.580	708	Copper Br. PVD	3.019
299	Matte Black	2.580	735	Warm Bronze PVD	2.828
720	Nickel PVD	2.828	726	Warm Bronze Br. PVD	3.019
706	Black Metal PVD	2.828	710	Brass PVD	2.828
707	Black Metal Br. PVD	3.019	727	Brass Br. PVD	3.019

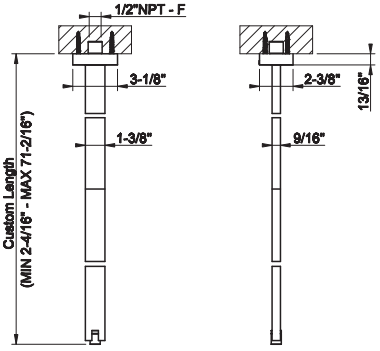

26699

Ceiling-mounted washbasin spout only
- Custom length: Min. 2-1/4” Max. 71-1/8”
- Drain not included - See DRAINS section
- Requiresmixer control
- Max flow rate 1.2 GPM



031	Chrome	2.498	030	Copper PVD	3.697
149	Finox Br. Nickel	3.373	708	Copper Br. PVD	3.947
299	Matte Black	3.373	735	Warm Bronze PVD	3.697
720	Nickel PVD	3.697	726	Warm Bronze Br. PVD	3.947
706	Black Metal PVD	3.697	710	Brass PVD	3.697
707	Black Metal Br. PVD	3.947	727	Brass Br. PVD	3.947

26600



Wall-mounted washbasin spout only
- Projection 7-3/4”
- 1/2” connections
- Drain not included - See DRAINS section
- Requires mixercontrol 26505, 26609+26612, or 48112+53109
- Max flow rate 1.2 GPM

031	Chrome	728	030	Copper PVD	1.078
149	Finox Br. Nickel	984	708	Copper Br. PVD	1.150
299	Matte Black	984	735	Warm Bronze PVD	1.078
720	Nickel PVD	1.078	726	Warm Bronze Br. PVD	1.150
706	Black Metal PVD	1.078	710	Brass PVD	1.078
707	Black Metal Br. PVD	1.150	727	Brass Br. PVD	1.150

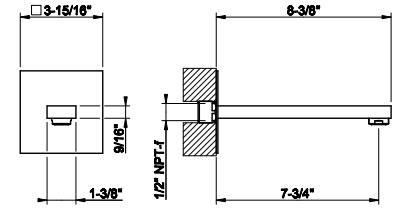

48112

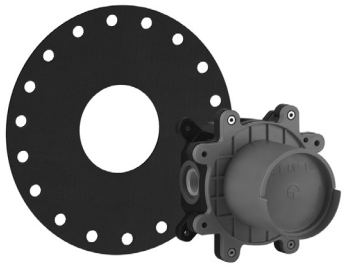

Wall-mounted one-way mixer control rough valve for trim 48106
- 1/2” connections
- Drain not included - See DRAINS section

031	Chrome	480

48112+53109

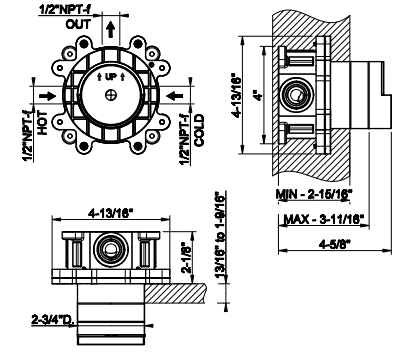

53109



TRIM PARTS ONLY Wall-mounted washbasin mixer control
- For spouts 26599, 26699 or 26600
- 1/2” connections
- Drain not included - See DRAINS section
- Requires in-wall rough valve 48112
- ADA compliant

031	Chrome	584	030	Copper PVD	1.044
149	Finox Br. Nickel	952	708	Copper Br. PVD	1.114
299	Matte Black	952	735	Warm Bronze PVD	1.044
720	Nickel PVD	1.044	726	Warm Bronze Br. PVD	1.114
706	Black Metal PVD	1.044	710	Brass PVD	1.044
707	Black Metal Br. PVD	1.114	727	Brass Br. PVD	1.114

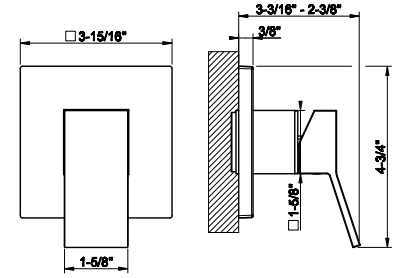

44697+53088

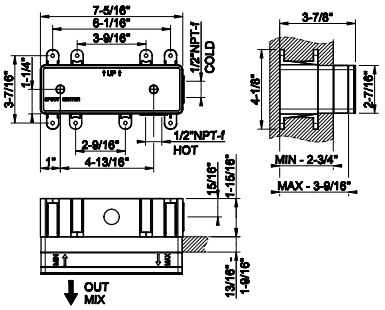

44697

Wall-mounted washbasin mixer control rough valve
- 1/2” connections

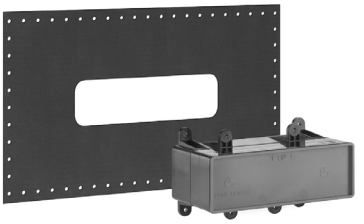

031	Chrome	547

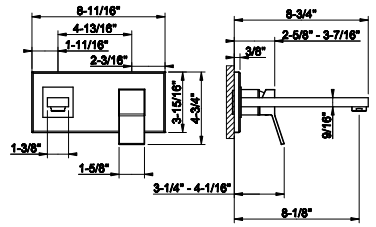

53088

TRIM PARTS ONLY Wall-mounted washbasin mixer trim
- Spout projection 8-1/8”
- Drain not included - See DRAINS section
- Requires in-wall rough valve 44697
- Max flow rate 1.2 GPM
- ADA compliant



031	Chrome	1.179	030	Copper PVD	1.951
149	Finox Br. Nickel	1.781	708	Copper Br. PVD	2.083
299	Matte Black	1.781	735	Warm Bronze PVD	1.951
720	Nickel PVD	1.951	726	Warm Bronze Br. PVD	2.083
706	Black Metal PVD	1.951	710	Brass PVD	1.951
707	Black Metal Br. PVD	2.083	727	Brass Br. PVD	2.083

44697+53084

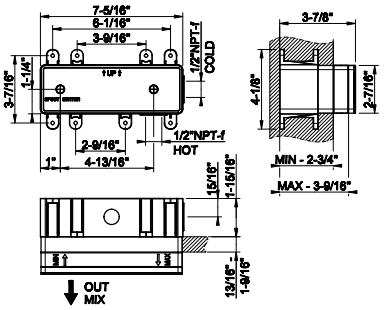

44697

Wall-mounted washbasin mixer control rough valve
- 1/2” connections

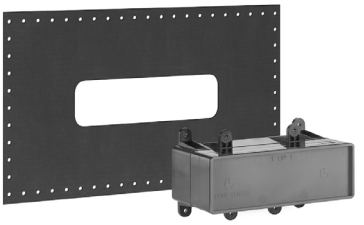

031	Chrome	547

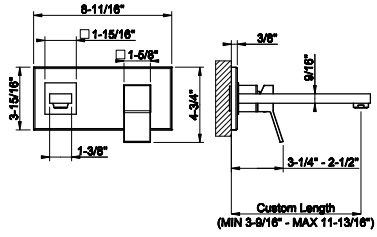

53084

TRIM PARTS ONLY Wall-mounted washbasin mixer trim
- Custom spout projection (MIN 3-9/16” - MAX 11-13/16”)
- Drain not included - See DRAINS section
- Requires in-wall rough valve 44697
- Max flow rate 1.2 GPM
- ADA compliant



031	Chrome	3.001	030	Copper PVD	4.439
149	Finox Br. Nickel	4.052	708	Copper Br. PVD	4.741
299	Matte Black	4.052	735	Warm Bronze PVD	4.439
720	Nickel PVD	4.439	726	Warm Bronze Br. PVD	4.741
706	Black Metal PVD	4.439	710	Brass PVD	4.439
707	Black Metal Br. PVD	4.741	727	Brass Br. PVD	4.741

53007



Bidet mixer with pop-up assembly
- Spout projection 4-5/8”
- Height 5-11/16”
- 1-1/4” D. pop-up drain and flexible hoses with 9/16”– 24 UNEF connections
- ADA compliant

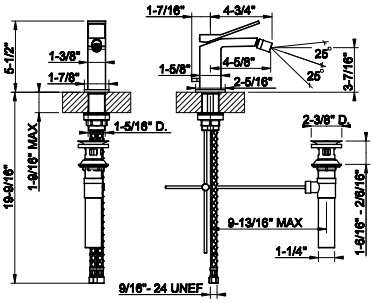

031	Chrome	1.114	030	Copper PVD	1.647
149	Finox Br. Nickel	1.504	708	Copper Br. PVD	1.759
299	Matte Black	1.504	735	Warm Bronze PVD	1.647
720	Nickel PVD	1.647	726	Warm Bronze Br. PVD	1.759
706	Black Metal PVD	1.647	710	Brass PVD	1.647
707	Black Metal Br. PVD	1.759	727	Brass Br. PVD	1.759

48189



Floor-mounted tub filler in-floor rough valve

031	Chrome	847

48189+53129

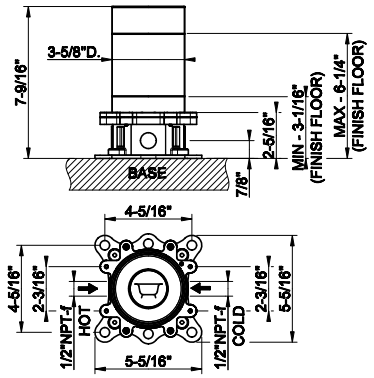

53129



TRIM PARTS ONLY Floor-mounted tub filler
- Handshower
- 59” flex hose
- Diverter
- Spout projection 9-11/16”
- Requires in-floor rough valve 48189
- Hand shower max flow rate 1.75 GPM
- Spout: mixed flow rate 6 GPM at 60 PSI

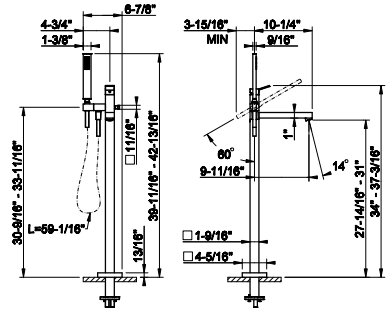

031	Chrome	4.384	030	Copper PVD	6.489
149	Finox Br. Nickel	5.918	708	Copper Br. PVD	6.926
299	Matte Black	5.918	735	Warm Bronze PVD	6.489
720	Nickel PVD	6.489	726	Warm Bronze Br. PVD	6.926
706	Black Metal PVD	6.489	710	Brass PVD	6.489
707	Black Metal Br. PVD	6.926	727	Brass Br. PVD	6.926

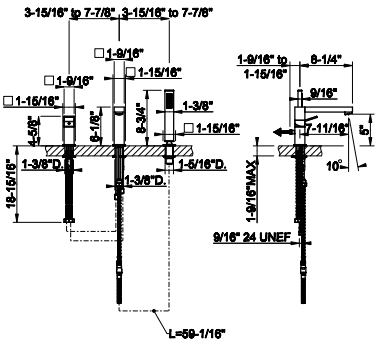

53037

Three-hole roman tub set
- Diverter
- Spout - Projection 7-11/16”
- Handshower
- 59” flex hose
- Handshower max flow rate 1.75 GPM
- Spout: mixed flow rate 5 GPM at 60 PSI

031	Chrome	2.491	030	Copper PVD	3.687
149	Finox Br. Nickel	3.364	708	Copper Br. PVD	3.937
299	Matte Black	3.364	735	Warm Bronze PVD	3.687
720	Nickel PVD	3.687	726	Warm Bronze Br. PVD	3.937
706	Black Metal PVD	3.687	710	Brass PVD	3.687
707	Black Metal Br. PVD	3.937	727	Brass Br. PVD	3.937

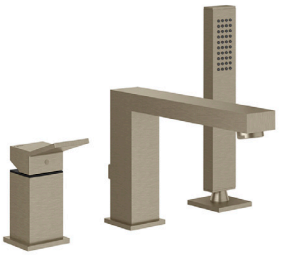

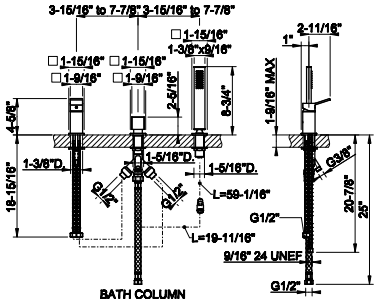

53043

Three-hole roman tub set to be used with overflow filler
- Diverter
- Handshower
- 59” flex hose
- Handshower max flow rate 1.75 GPM

031	Chrome	2.241	030	Copper PVD	3.315
149	Finox Br. Nickel	3.024	708	Copper Br. PVD	3.538
299	Matte Black	3.024	735	Warm Bronze PVD	3.315
720	Nickel PVD	3.315	726	Warm Bronze Br. PVD	3.538
706	Black Metal PVD	3.315	710	Brass PVD	3.315
707	Black Metal Br. PVD	3.538	727	Brass Br. PVD	3.538

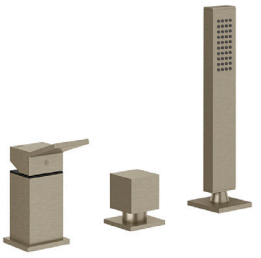

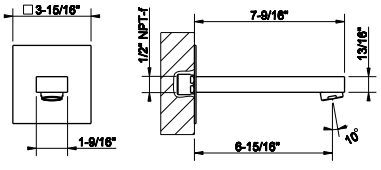

26603

Wall-mounted bath spout
- Projection 6-15/16”
- 1/2” connections
- Requires separate control
- Spout: flow rate 6.5 GPM at 60 PSI

031	Chrome	627	030	Copper PVD	929
149	Finox Br. Nickel	847	708	Copper Br. PVD	992
299	Matte Black	847	735	Warm Bronze PVD	929
720	Nickel PVD	929	726	Warm Bronze Br. PVD	992
706	Black Metal PVD	929	710	Brass PVD	929
707	Black Metal Br. PVD	992	727	Brass Br. PVD	992

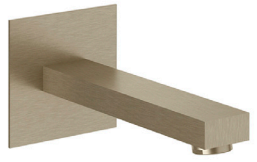

GESSI



RETTANGOLO



26501

Single lever washbasin mixer with pop-up assembly
• Spout projection 5-1/16”
• Height 5-15/16”
• 1-1/4” D. pop-up drain and flexible hoses with 9/16” – 24 UNEF connections
• Max flow rate 1.2 GPM
• ADA compliant

031	Chrome	1.103	030	Copper PVD	1.633
149	Finox Br. Nickel	1.490	708	Copper Br. PVD	1.744
299	Matte Black	1.490	735	Warm Bronze PVD	1.633
720	Nickel PVD	1.633	726	Warm Bronze Br. PVD	1.744
706	Black Metal PVD	1.633	710	Brass PVD	1.633
707	Black Metal Br. PVD	1.744	727	Brass Br. PVD	1.744

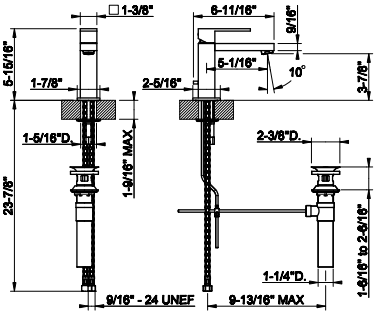



11971

Tall single lever washbasin mixer with pop-up assembly
• Spout projection 5-1/16”
• Height 11-11/16”
• 1-1/4” D. pop-up drain and flexible hoses with 9/16” – 24 UNEF connections
• Max flow rate 1.2 GPM
• ADA compliant

031	Chrome	1.316	030	Copper PVD	1.947
149	Finox Br. Nickel	1.777	708	Copper Br. PVD	2.079
299	Matte Black	1.777	735	Warm Bronze PVD	1.947
720	Nickel PVD	1.947	726	Warm Bronze Br. PVD	2.079
706	Black Metal PVD	1.947	710	Brass PVD	1.947
707	Black Metal Br. PVD	2.079	727	Brass Br. PVD	2.079

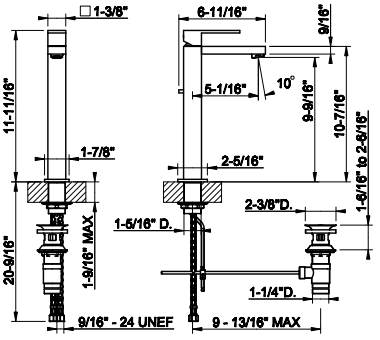



11955

Tall single lever washbasin mixer with pop-up assembly
• Extended spout projection 8-3/8”
• Height 11-11/16”
• 1-1/4” D. pop-up drain and flexible hoses with 9/16” – 24 UNEF connections
• Max flow rate 1.2 GPM
• ADA compliant

031	Chrome	1.463	030	Copper PVD	2.167
149	Finox Br. Nickel	1.976	708	Copper Br. PVD	2.312
299	Matte Black	1.976	735	Warm Bronze PVD	2.167
720	Nickel PVD	2.167	726	Warm Bronze Br. PVD	2.312
706	Black Metal PVD	2.167	710	Brass PVD	2.167
707	Black Metal Br. PVD	2.312	727	Brass Br. PVD	2.312

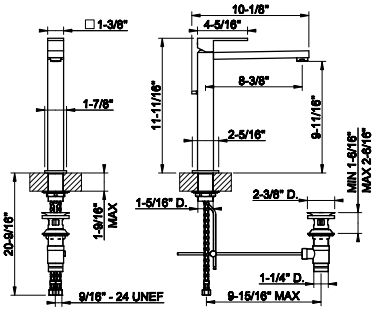

RETTANGOLO

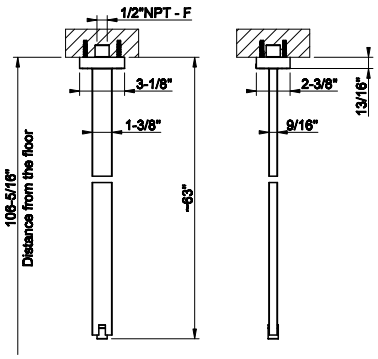

26599

Ceiling-mounted washbasin spout only
- Spout length 63”
- Drain not included - See DRAINS section
- Requires mixer control
- Max flow rate 1.2 GPM



031	Chrome	1.912	030	Copper PVD	2.828
149	Finox Br. Nickel	2.580	708	Copper Br. PVD	3.019
299	Matte Black	2.580	735	Warm Bronze PVD	2.828
720	Nickel PVD	2.828	726	Warm Bronze Br. PVD	3.019
706	Black Metal PVD	2.828	710	Brass PVD	2.828
707	Black Metal Br. PVD	3.019	727	Brass Br. PVD	3.019

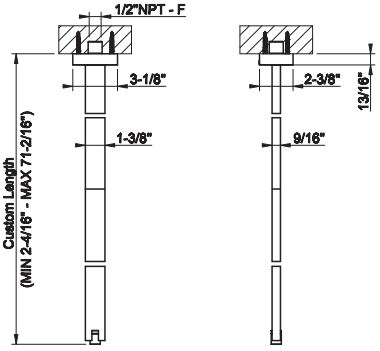

26699

Ceiling-mounted washbasin spout only
- Custom length: Min. 2-1/4” Max. 71-1/8”
- Drain not included - See DRAINS section
- Requiresmixer control
- Max flow rate 1.2 GPM



031	Chrome	2.498	030	Copper PVD	3.697
149	Finox Br. Nickel	3.373	708	Copper Br. PVD	3.947
299	Matte Black	3.373	735	Warm Bronze PVD	3.697
720	Nickel PVD	3.697	726	Warm Bronze Br. PVD	3.947
706	Black Metal PVD	3.697	710	Brass PVD	3.697
707	Black Metal Br. PVD	3.947	727	Brass Br. PVD	3.947

26600



Wall-mounted washbasin spout only
- Projection 7-3/4”
- 1/2” connections
- Drain not included - See DRAINS section
- Requires mixercontrol 26505, 26609+26612, or 48112+53109
- Max flow rate 1.2 GPM

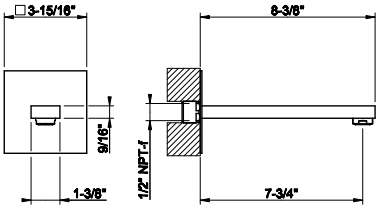

031	Chrome	728	030	Copper PVD	1.078
149	Finox Br. Nickel	984	708	Copper Br. PVD	1.150
299	Matte Black	984	735	Warm Bronze PVD	1.078
720	Nickel PVD	1.078	726	Warm Bronze Br. PVD	1.150
706	Black Metal PVD	1.078	710	Brass PVD	1.078
707	Black Metal Br. PVD	1.150	727	Brass Br. PVD	1.150

26505



Deck-mounted washbasin mixer control
- For spouts 26599, 26699 and 26600
- Drain not included - See DRAINS section
- ADA compliant

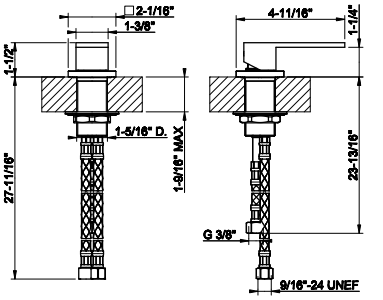

031	Chrome	582	030	Copper PVD	862
149	Finox Br. Nickel	786	708	Copper Br. PVD	918
299	Matte Black	786	735	Warm Bronze PVD	862
720	Nickel PVD	862	726	Warm Bronze Br. PVD	918
706	Black Metal PVD	862	710	Brass PVD	862
707	Black Metal Br. PVD	918	727	Brass Br. PVD	918

48112

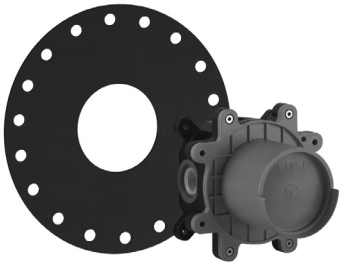

Wall-mounted one-way mixer control rough valve for trim 48106
- 1/2” connections
- Drain not included - See DRAINS section

031	Chrome	480

48112+20119

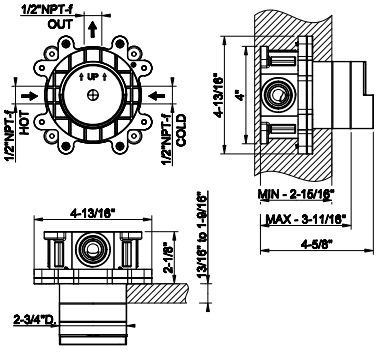

20119



External parts mixer one-way diverter
- 1/2” connections
- Drain not included - See DRAINS section
- Requires in-wall rough valve 48112

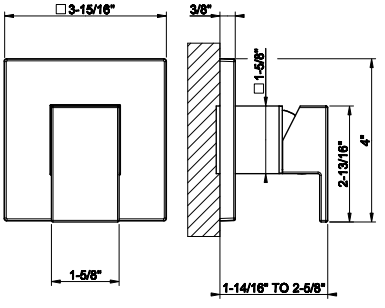

031	Chrome	595	030	Copper PVD	1.080
149	Finox Br. Nickel	949	708	Copper Br. PVD	1.182
299	Matte Black	949	735	Warm Bronze PVD	1.080
720	Nickel PVD	1.080	726	Warm Bronze Br. PVD	1.182
706	Black Metal PVD	1.080	710	Brass PVD	1.080
707	Black Metal Br. PVD	1.182	727	Brass Br. PVD	1.182

44697+44836

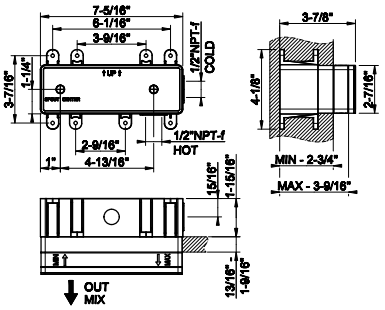

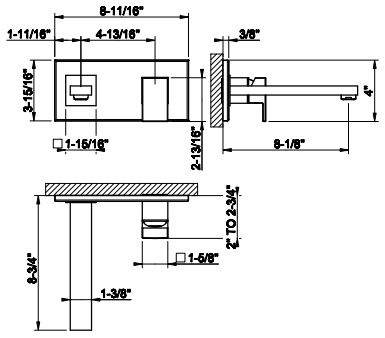

44697

Wall-mounted washbasin mixer control rough valve
- 1/2” connections

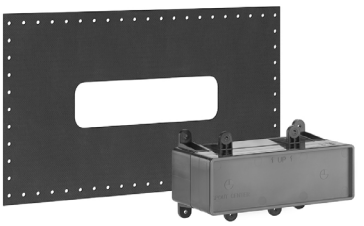

031	Chrome	547

44836

External parts wall-mounted mixer, medium spout, without waste
- Max flow rate 1,2 GPM
- Spout projection 8-1/8”
- Drain not included - See DRAINS section
- Requires in-wall rough valve 44697



031	Chrome	1.199	030	Copper PVD	2.007
149	Finox Br. Nickel	1.708	708	Copper Br. PVD	2.177
299	Matte Black	1.621	735	Warm Bronze PVD	2.007
720	Nickel PVD	2.007	726	Warm Bronze Br. PVD	2.177
706	Black Metal PVD	2.007	710	Brass PVD	2.007
707	Black Metal Br. PVD	2.177	727	Brass Br. PVD	2.177



48189

Floor-mounted tub filler in-floor rough valve

031	Chrome	847

48189+24961

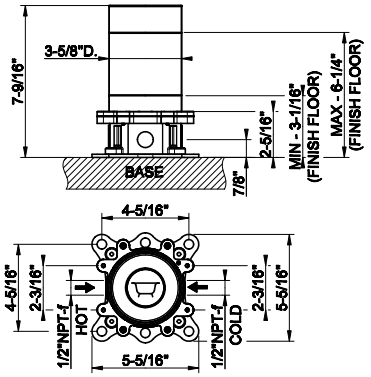



24961

TRIM PARTS ONLY Floor-mounted tub filler
- Handshower
- 59” flex hose
- Diverter
- Requires in-floor valve 48189
- Spout projection 9-11/16”
- Handshower Max flow rate 1.75 GPM
- Spout: mixed flow rate 6 GPM at 60 PSI

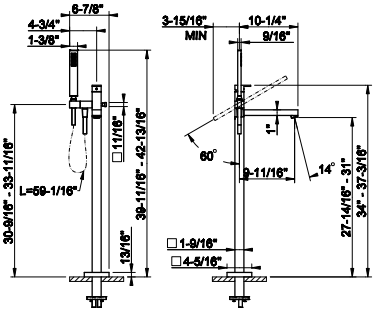

031	Chrome	4.384	030	Copper PVD	6.489
149	Finox Br. Nickel	5.918	708	Copper Br. PVD	6.926
299	Matte Black	5.918	735	Warm Bronze PVD	6.489
720	Nickel PVD	6.489	726	Warm Bronze Br. PVD	6.926
706	Black Metal PVD	6.489	710	Brass PVD	6.489
707	Black Metal Br. PVD	6.926	727	Brass Br. PVD	6.926



26537

Three-hole roman tub set
- Diverter
- Spout - Projection 7-11/16”
- Handshower
- 59” flex hose
- Handshower max flow rate 1.75 GPM
- Spout: mixed flow rate 5 GPM at 60 PSI

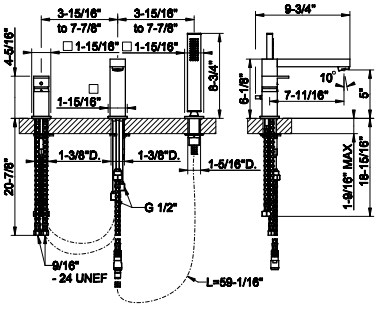

031	Chrome	2.498	030	Copper PVD	3.697
149	Finox Br. Nickel	3.373	708	Copper Br. PVD	3.947
299	Matte Black	3.373	735	Warm Bronze PVD	3.697
720	Nickel PVD	3.697	726	Warm Bronze Br. PVD	3.947
706	Black Metal PVD	3.697	710	Brass PVD	3.697
707	Black Metal Br. PVD	3.947	727	Brass Br. PVD	3.947

RETTANGOLO

26603

Wall-mounted bath spout
- Projection 6-15/16”
- 1/2” connections
- Requires separate control
- Spout: flow rate 6.5 GPM at 60 PSI

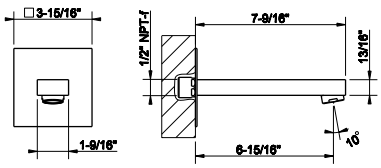

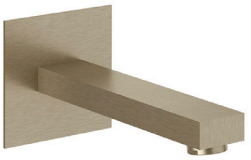

031	Chrome	627	030	Copper PVD	929
149	Finox Br. Nickel	847	708	Copper Br. PVD	992
299	Matte Black	847	735	Warm Bronze PVD	929
720	Nickel PVD	929	726	Warm Bronze Br. PVD	992
706	Black Metal PVD	929	710	Brass PVD	929
707	Black Metal Br. PVD	992	727	Brass Br. PVD	992



RETTANGOLO SHOWER

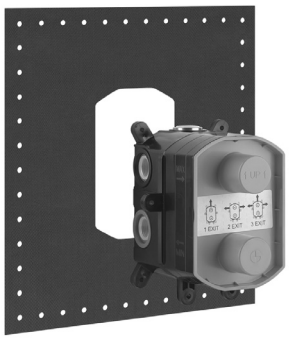

09279

In-wall thermostatic rough valve for 1/2/3-way diverter function
- 1/2” connections
- Vertical application
- Anti-scalding
- Non-Shared function

031	Chrome	877

09279+20183

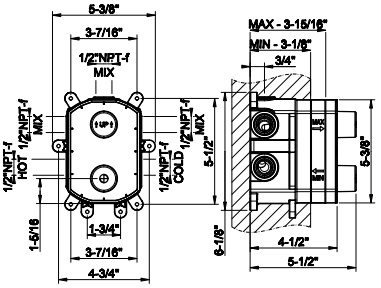



20183

TRIM PARTS ONLY External parts for thermostatic with single volume control
- Single backplate
- 1/2” connections
- Vertical application
- Anti-scalding
- Requires in-wall rough valve 09279

031	Chrome	1.251	030	Copper PVD	1.851
149	Finox Br. Nickel	1.689	708	Copper Br. PVD	1.976
299	Matte Black	1.689	735	Warm Bronze PVD	1.851
720	Nickel PVD	1.851	726	Warm Bronze Br. PVD	1.976
706	Black Metal PVD	1.851	710	Brass PVD	1.851
707	Black Metal Br. PVD	1.976	727	Brass Br. PVD	1.976

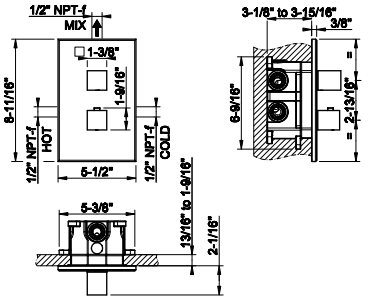

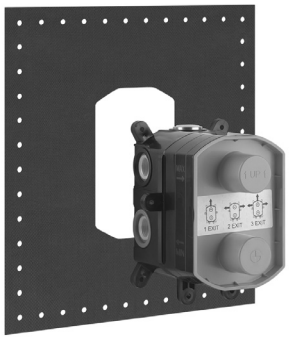

09279

In-wall thermostatic rough valve for 1/2/3-way diverter function
- 1/2” connections
- Vertical application
- Anti-scalding
- Non-Shared function

031	Chrome	877

09279+20204

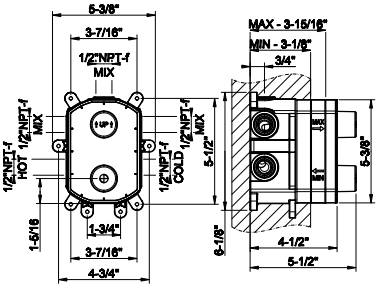



20204

TRIM PARTS ONLY External parts for 2-way diverter thermostatic and volume control
- Single backplate
- 1/2” connections
- Verticalapplication
- Anti-scalding
- Requires in-wall rough valve 09279

031	Chrome	1.251	030	Copper PVD	1.851
149	Finox Br. Nickel	1.689	708	Copper Br. PVD	1.976
299	Matte Black	1.689	735	Warm Bronze PVD	1.851
720	Nickel PVD	1.851	726	Warm Bronze Br. PVD	1.976
706	Black Metal PVD	1.851	710	Brass PVD	1.851
707	Black Metal Br. PVD	1.976	727	Brass Br. PVD	1.976

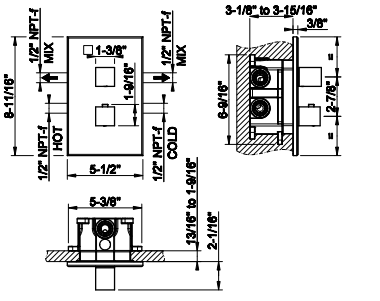

09279+20210

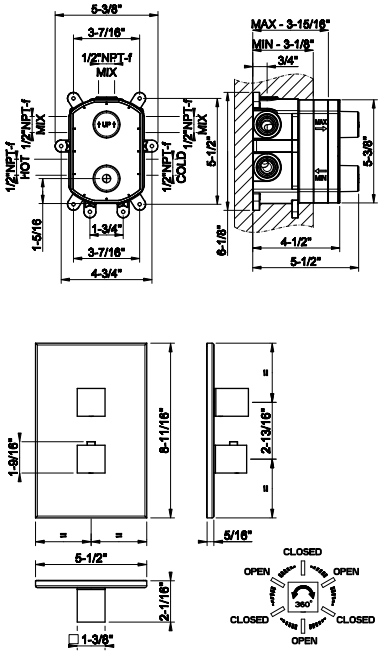

09279

In-wall thermostatic rough valve for 1/2/3-way diverter function
- 1/2” connections
- Vertical application
- Anti-scalding
- Non-Shared function

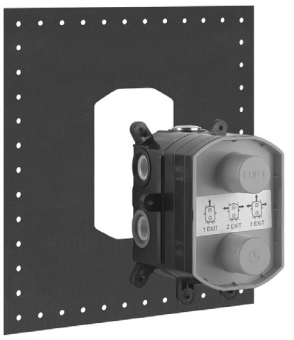

031	Chrome	877

20210

TRIM PARTS ONLY External parts for 3-way diverter thermostatic and volume control
- Single backplate
- 1/2” connections
- Verticalapplication
- Anti-scalding
- Requires in-wall rough valve 09279



031	Chrome	1.251	030	Copper PVD	1.851
149	Finox Br. Nickel	1.689	708	Copper Br. PVD	1.976
299	Matte Black	1.689	735	Warm Bronze PVD	1.851
720	Nickel PVD	1.851	726	Warm Bronze Br. PVD	1.976
706	Black Metal PVD	1.851	710	Brass PVD	1.851
707	Black Metal Br. PVD	1.976	727	Brass Br. PVD	1.976

39693+39712

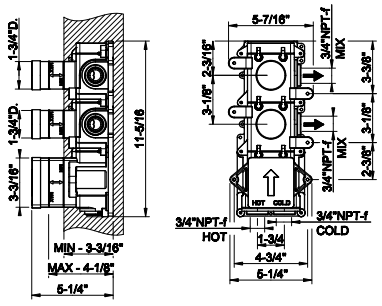

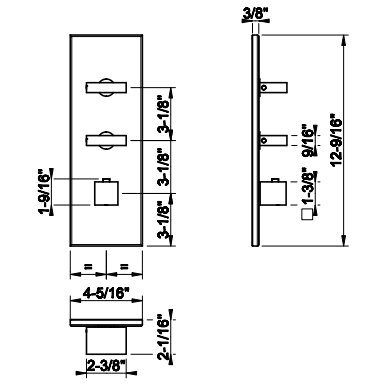

39693

In-wall thermostatic rough valve with 2 volume controls
- High capacity
- 3/4” connections
- Vertical/Horizontal application
- Anti-scalding

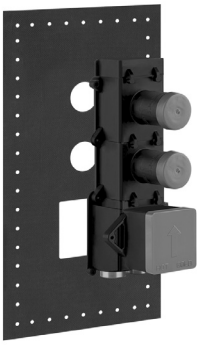

031	Chrome	1.903

39712

TRIM PARTS ONLY External parts for thermostatic with 2 volume controls
- Single backplate
- High capacity
- 3/4” connections
- Vertical/Horizontal application
- Anti-scalding
- Requires in-wall rough valve 39693



031	Chrome	2.051	030	Copper PVD	3.034
149	Finox Br. Nickel	2.769	708	Copper Br. PVD	3.240
299	Matte Black	2.769	735	Warm Bronze PVD	3.034
720	Nickel PVD	3.034	726	Warm Bronze Br. PVD	3.240
706	Black Metal PVD	3.034	710	Brass PVD	3.034
707	Black Metal Br. PVD	3.240	727	Brass Br. PVD	3.240

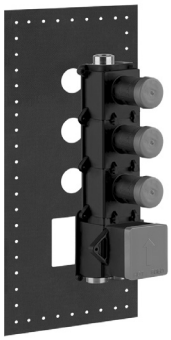

39695

In-wall thermostatic rough valve with 3 volume controls
- High capacity
- 3/4” connections
- Vertical/Horizontal application
- Anti-scalding

031	Chrome	2.197

39695+39714

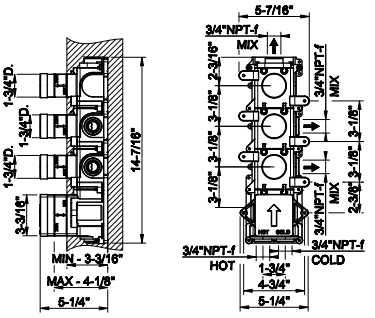



39714

TRIM PARTS ONLY External parts for thermostatic with 3 volume controls
- Single backplate
- High capacity
- 3/4” connections
- Vertical/Horizontal application
- Anti-scalding
- Requires in-wall rough valve 39695

031	Chrome	2.343	030	Copper PVD	3.469
149	Finox Br. Nickel	3.164	708	Copper Br. PVD	3.702
299	Matte Black	3.164	735	Warm Bronze PVD	3.469
720	Nickel PVD	3.469	726	Warm Bronze Br. PVD	3.702
706	Black Metal PVD	3.469	710	Brass PVD	3.469
707	Black Metal Br. PVD	3.702	727	Brass Br. PVD	3.702

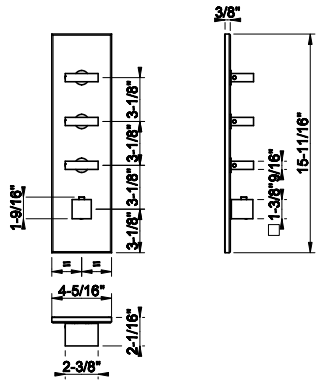

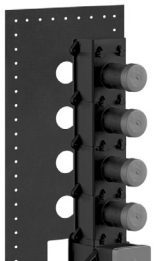

39699

In-wall thermostatic rough valve with 4 volume controls
- High capacity
- 3/4” connections
- Vertical/Horizontal application
- Anti-scalding
- Max flow rate 1.75 GPM

031	Chrome	2.498

39699+39716

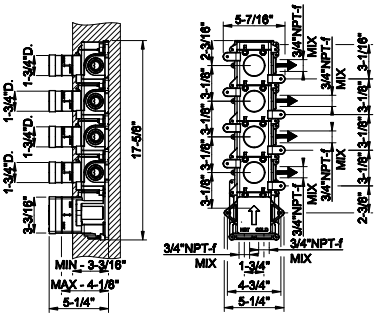



39716

TRIM PARTS ONLY External parts for thermostatic with 4 volume controls
- Single backplate
- High capacity
- 3/4” connections
- Vertical/Horizontal application
- Anti-scalding
- Requires in-wall rough valve 39699

031	Chrome	2.637	030	Copper PVD	3.905
149	Finox Br. Nickel	3.561	708	Copper Br. PVD	4.168
299	Matte Black	3.561	735	Warm Bronze PVD	3.905
720	Nickel PVD	3.905	726	Warm Bronze Br. PVD	4.168
706	Black Metal PVD	3.905	710	Brass PVD	3.905
707	Black Metal Br. PVD	4.168	727	Brass Br. PVD	4.168

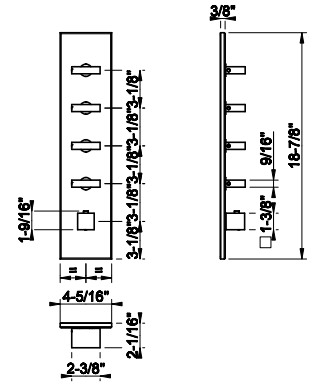

39601+39720

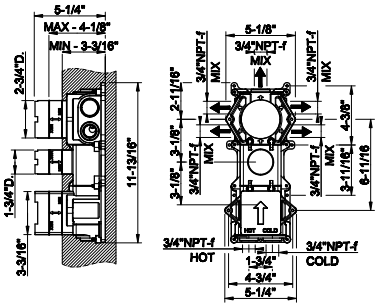

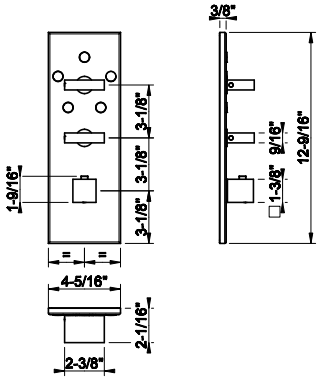

39601

In-wall thermostatic rough valve with 5-way diverter
- High capacity
- 3/4" connections
- Vertical/Horizontal application
- Anti-scalding
- Non shared function

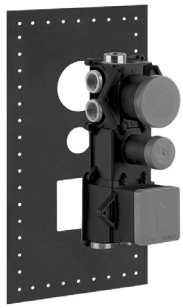

031	Chrome	2.637

39720

TRIM PARTS ONLY External parts for 5-way thermostatic diverter with volume control
- Single backplate
- High capacity
- 3/4" connections
- Vertical/Horizontal application
- Anti-scalding
- Requires in-wall rough valve 39601



031	Chrome	2.051	030	Copper PVD	3.034
149	Finox Br. Nickel	2.769	708	Copper Br. PVD	3.240
299	Matte Black	2.769	735	Warm Bronze PVD	3.034
720	Nickel PVD	3.034	726	Warm Bronze Br. PVD	3.240
706	Black Metal PVD	3.034	710	Brass PVD	3.034
707	Black Metal Br. PVD	3.240	727	Brass Br. PVD	3.240

39681+39654

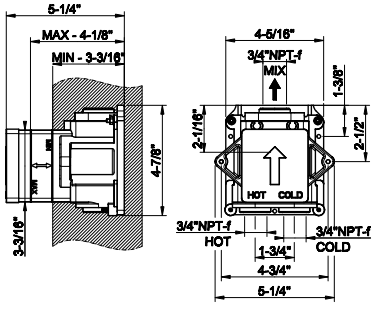

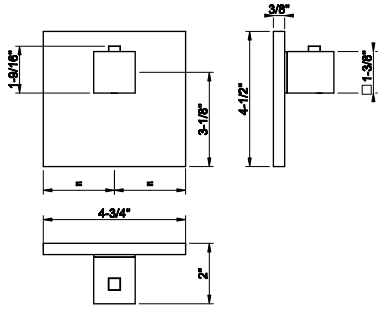

39681

In-wall thermostatic rough valve for individual mixer
- High capacity
- 3/4" connections
- Vertical/Horizontal application
- Anti-scalding

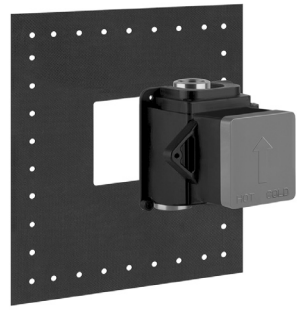

031	Chrome	1.169

39654

TRIM PARTS ONLY External parts for individual thermostatic mixer
- High capacity
- 3/4" connections
- Vertical/Horizontal application
- Anti-scalding
- Requires in-wall rough valve 39681



031	Chrome	877	708	Copper Br. PVD	1.385
149	Finox Br. Nickel	1.183	735	Warm Bronze PVD	1.298
299	Matte Black	1.183	726	Warm Bronze Br. PVD	1.385
720	Nickel PVD	1.298	710	Brass PVD	1.298
706	Black Metal PVD	1.298	727	Brass Br. PVD	1.385
707	Black Metal Br. PVD	1.385	187	Aged Bronze	1.385
030	Copper PVD	1.298	713	Antique Brass	1.385

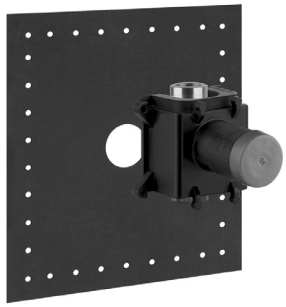

39683

In-wall thermostatic rough valve parts for volume control
- High capacity
- 3/4” connections
- Vertical/Horizontal application
- Anti-scalding

031	Chrome	582

39683+43264

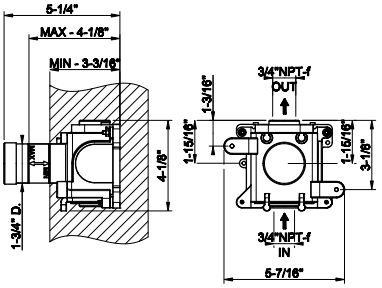

43264

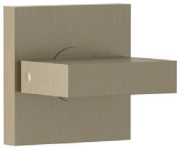

TRIM PARTS ONLY External parts for individual thermostatic volume control
- High capacity
- 3/4” connections
- Vertical/Horizontalapplication
- Anti-scalding
- Requires in-wall rough valve 39683
- ADA compliant

031	Chrome	517	030	Copper PVD	794
149	Finox Br. Nickel	725	708	Copper Br. PVD	848
299	Matte Black	725	735	Warm Bronze PVD	794
720	Nickel PVD	794	726	Warm Bronze Br. PVD	848
706	Black Metal PVD	794	710	Brass PVD	794
707	Black Metal Br. PVD	848	727	Brass Br. PVD	848

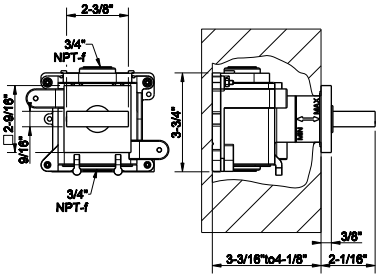

33095



Wall-fixing headshower.
- 1/2” connections
- Projection from the wall to center15-1/2”
- Total projection 21-5/8”
- Max flow rate1.75 GPM

239	Steel Br.	4.784	726	Warm Bronze Br. PVD	7.559
238	Mirror Steel	4.784	710	Brass PVD	7.081
299	Matte Black	6.459	727	Brass Br. PVD	7.559
720	Nickel PVD	7.081	246	Gold PVD	8.038
706	Black Metal PVD	7.081	716	Gold Br. PVD	8.038
707	Black Metal Br. PVD	7.559	187	Aged Bronze	7.559
030	Copper PVD	7.081	713	Antique Brass	7.559
708	Copper Br. PVD	7.559	845	Dark Bronze	7.559
735	Warm Bronze PVD	7.081	279	Matte White	6.459

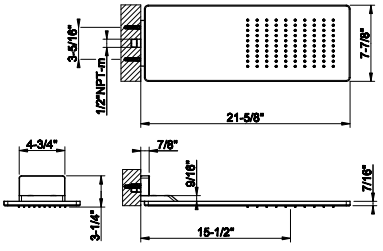

26648



Wall-mounted adjustable shower head with arm
- 1/2” connections
- Projection from wall to center 13”
- Total projection 17-1/4”
- Max flow rate 1.75 GPM

031	Chrome	2.197	726	Warm Bronze Br. PVD	3.471
149	Finox Br. Nickel	2.966	710	Brass PVD	3.253
299	Matte Black	2.966	727	Brass Br. PVD	3.471
720	Nickel PVD	3.253	246	Gold PVD	3.691
706	Black Metal PVD	3.253	716	Gold Br. PVD	3.691
707	Black Metal Br. PVD	3.471	187	Aged Bronze	3.471
030	Copper PVD	3.253	713	Antique Brass	3.471
708	Copper Br. PVD	3.471	845	Dark Bronze	3.471
735	Warm Bronze PVD	3.253	279	Matte White	2.966

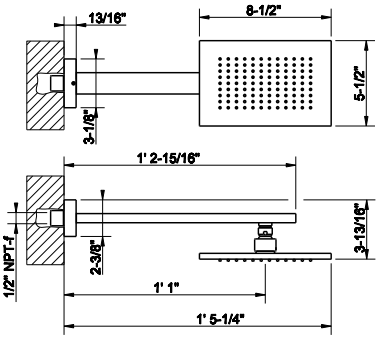

RETTANGOLO BATH&SHOWER

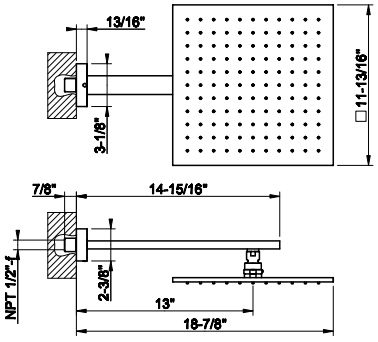

15185

Wall-mounted adjustable and antilimestone showerhead 11-13/16" X 11-13/16"
- 1/2" connections
- Projection from wall 18-7/8"
- Max flow rate 1.75 GPM



031	Chrome	3.187	726	Warm Bronze Br. PVD	5.034
149	Finox Br. Nickel	4.301	710	Brass PVD	4.718
299	Matte Black	4.301	727	Brass Br. PVD	5.034
720	Nickel PVD	4.718	246	Gold PVD	5.355
706	Black Metal PVD	4.718	716	Gold Br. PVD	5.355
707	Black Metal Br. PVD	5.034	187	Aged Bronze	5.034
030	Copper PVD	4.718	713	Antique Brass	5.034
708	Copper Br. PVD	5.034	845	Dark Bronze	5.034
735	Warm Bronze PVD	4.718	279	Matte White	4.301

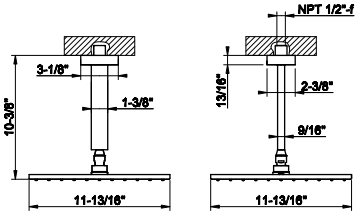

15186

Ceiling-mounted adjustable and antilimestone showerhead 11-13/16" X 11-13/16"
- 1/2" connections
- Projection from ceiling 10-3/8"
- Max flow rate 1.75 GPM



031	Chrome	3.030	726	Warm Bronze Br. PVD	4.787
149	Finox Br. Nickel	4.089	710	Brass PVD	4.483
299	Matte Black	4.089	727	Brass Br. PVD	4.787
720	Nickel PVD	4.483	246	Gold PVD	5.091
706	Black Metal PVD	4.483	716	Gold Br. PVD	5.091
707	Black Metal Br. PVD	4.787	187	Aged Bronze	4.787
030	Copper PVD	4.483	713	Antique Brass	4.787
708	Copper Br. PVD	4.787	845	Dark Bronze	4.787
735	Warm Bronze PVD	4.483	279	Matte White	4.089

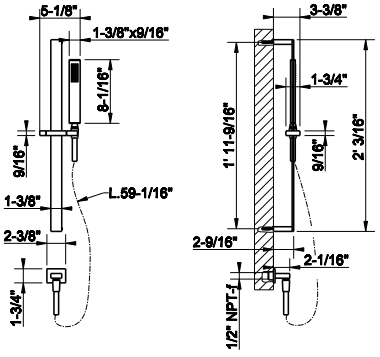

26642

Handshower and adjustable sliding rail set
- Adjustable bar
- Adjustable hook
- 59" flex hose
- Wall elbow
- Max flow rate 1.75 GPM



031	Chrome	1.958	030	Copper PVD	2.897
149	Finox Br. Nickel	2.643	708	Copper Br. PVD	3.094
299	Matte Black	2.643	735	Warm Bronze PVD	2.897
720	Nickel PVD	2.897	726	Warm Bronze Br. PVD	3.094
706	Black Metal PVD	2.897	710	Brass PVD	2.897
707	Black Metal Br. PVD	3.094	727	Brass Br. PVD	3.094

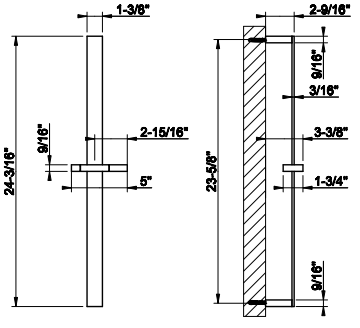

20144

Handshower sliding rail only
- Adjustable bar
- Adjustable hook
- Requires handshower 20154 or 14376, flex hose 01637 and wall elbow 26669
- Vertical or horizontal application



031	Chrome	1.069	030	Copper PVD	1.581
149	Finox Br. Nickel	1.443	708	Copper Br. PVD	1.688
299	Matte Black	1.443	735	Warm Bronze PVD	1.581
720	Nickel PVD	1.581	726	Warm Bronze Br. PVD	1.688
706	Black Metal PVD	1.581	710	Brass PVD	1.581
707	Black Metal Br. PVD	1.688	727	Brass Br. PVD	1.688

32987

In-wall rough valve for pivotable body spray 32984



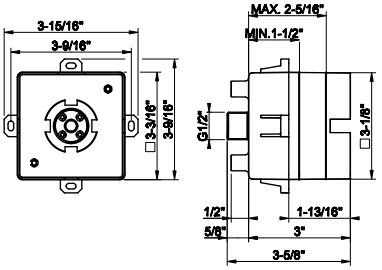

031	Chrome	406

32984

TRIM PARTS ONLY Square in-wall pivotable body spray
- 1/2” connections
- Requires in-wall rough valve 32987
- Max flow rate 1 GPM at 60 PSI

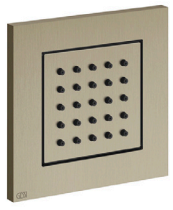

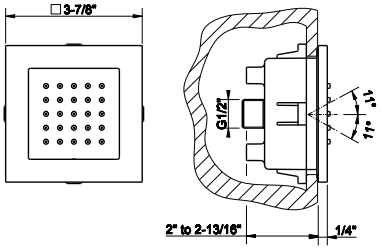

031	Chrome	957	708	Copper Br. PVD	1.513
149	Finox Br. Nickel	1.293	735	Warm Bronze PVD	1.417
299	Matte Black	1.293	726	Warm Bronze Br. PVD	1.513
720	Nickel PVD	1.417	710	Brass PVD	1.417
706	Black Metal PVD	1.417	727	Brass Br. PVD	1.513
707	Black Metal Br. PVD	1.513	713	Antique Brass	1.513
030	Copper PVD	1.417	279	Matte White	1.293

32973

Square body spray
- 1/2” connections
- Max flow rate 1 GPM at 60 PSI



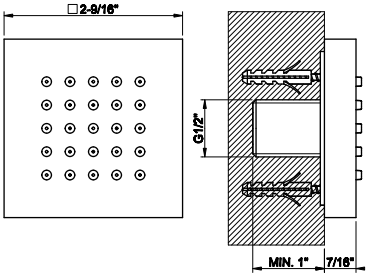

031	Chrome	552	708	Copper Br. PVD	873
149	Finox Br. Nickel	746	735	Warm Bronze PVD	818
299	Matte Black	746	726	Warm Bronze Br. PVD	873
720	Nickel PVD	818	710	Brass PVD	818
706	Black Metal PVD	818	727	Brass Br. PVD	873
707	Black Metal Br. PVD	873	713	Antique Brass	873
030	Copper PVD	818	279	Matte White	746

26672

Pivotable body spray
- 1/2” connection
- Max flow rate .65 GPM at 60 PSI



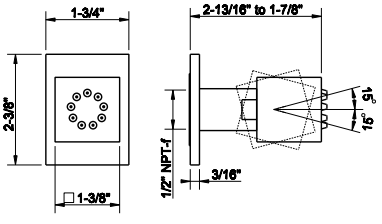

031	Chrome	435	708	Copper Br. PVD	688
149	Finox Br. Nickel	589	735	Warm Bronze PVD	644
299	Matte Black	589	726	Warm Bronze Br. PVD	688
720	Nickel PVD	644	710	Brass PVD	644
706	Black Metal PVD	644	727	Brass Br. PVD	688
707	Black Metal Br. PVD	688	713	Antique Brass	688
030	Copper PVD	644			

RETTANGOLO BATH&SHOWER

32975

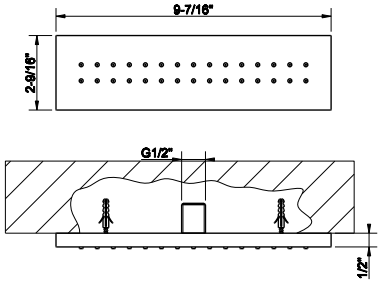

Rectangular body spray
- 1/2” connections
- Max flow rate 1 GPM at 60 PSI

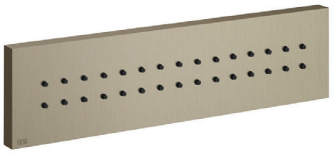

031	Chrome	1.316	708	Copper Br. PVD	2.079
149	Finox Br. Nickel	1.777	735	Warm Bronze PVD	1.947
299	Matte Black	1.777	726	Warm Bronze Br. PVD	2.079
720	Nickel PVD	1.947	710	Brass PVD	1.947
706	Black Metal PVD	1.947	727	Brass Br. PVD	2.079
707	Black Metal Br. PVD	2.079	713	Antique Brass	2.079
030	Copper PVD	1.947	279	Matte White	1.777

20295

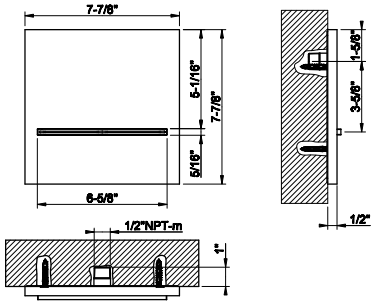

Wall-fixing cascade spout with separate control (not included).
- 1/2” connections
- Flow rate 4.8 GPM at 60 PSI



239	Steel Br.	1.949	726	Warm Bronze Br. PVD	3.077
238	Mirror Steel	1.949	710	Brass PVD	2.884
299	Matte Black	2.631	727	Brass Br. PVD	3.077
720	Nickel PVD	2.884	246	Gold PVD	3.273
706	Black Metal PVD	2.884	716	Gold Br. PVD	3.273
707	Black Metal Br. PVD	3.077	187	Aged Bronze	3.077
030	Copper PVD	2.884	713	Antique Brass	3.077
708	Copper Br. PVD	3.077	845	Dark Bronze	3.077
735	Warm Bronze PVD	2.884	279	Matte White	2.631

20293

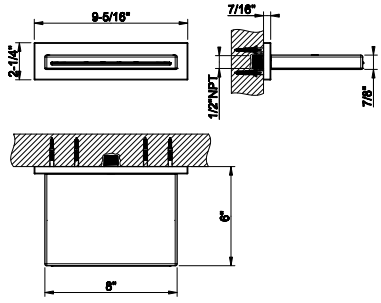

Wall-fixing cascade spout with separate control (not included)
- 1/2” connections
- Projection from the wall 6”
- Flow rate 4.2 GPM at 60 PSI



239	Steel Br.	2.966	726	Warm Bronze Br. PVD	4.687
238	Mirror Steel	2.966	710	Brass PVD	4.390
299	Matte Black	4.006	727	Brass Br. PVD	4.687
720	Nickel PVD	4.390	246	Gold PVD	4.985
706	Black Metal PVD	4.390	716	Gold Br. PVD	4.985
707	Black Metal Br. PVD	4.687	187	Aged Bronze	4.687
030	Copper PVD	4.390	713	Antique Brass	4.687
708	Copper Br. PVD	4.687	845	Dark Bronze	4.687
735	Warm Bronze PVD	4.390	279	Matte White	4.006

26623

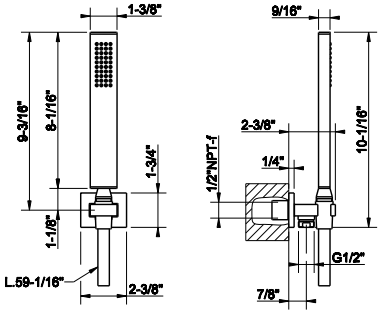

Handshower set
- Fixed hook
- Wall elbow
- 59” flex hose
- Max flow rate 1.75 GPM



031	Chrome	1.023	030	Copper PVD	1.514
149	Finox Br. Nickel	1.380	708	Copper Br. PVD	1.616
299	Matte Black	1.380	735	Warm Bronze PVD	1.514
720	Nickel PVD	1.514	726	Warm Bronze Br. PVD	1.616
706	Black Metal PVD	1.514	710	Brass PVD	1.514
707	Black Metal Br. PVD	1.616	727	Brass Br. PVD	1.616

26669

Wall elbow with backplate
• 1/2” connections



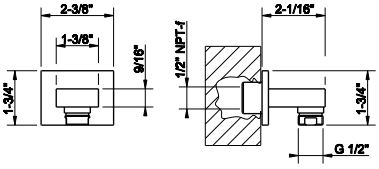

031	Chrome	341	030	Copper PVD	504
149	Finox Br. Nickel	460	708	Copper Br. PVD	539
299	Matte Black	460	735	Warm Bronze PVD	504
720	Nickel PVD	504	726	Warm Bronze Br. PVD	539
706	Black Metal PVD	504	710	Brass PVD	504
707	Black Metal Br. PVD	539	727	Brass Br. PVD	539

20154

Handshower
• Max flow rate 1.75 GPM



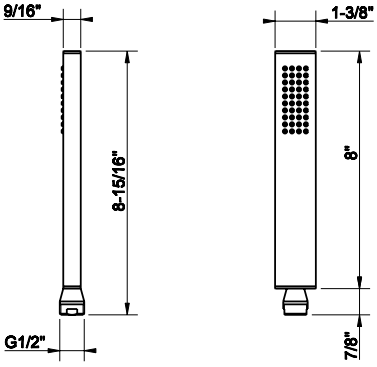

031	Chrome	421	030	Copper PVD	624
149	Finox Br. Nickel	569	708	Copper Br. PVD	664
299	Matte Black	569	735	Warm Bronze PVD	624
720	Nickel PVD	624	726	Warm Bronze Br. PVD	664
706	Black Metal PVD	624	710	Brass PVD	624
707	Black Metal Br. PVD	664	727	Brass Br. PVD	664

14370

Antilimestone handshower
• Single spray
• Max flow rate 1.75 GPM



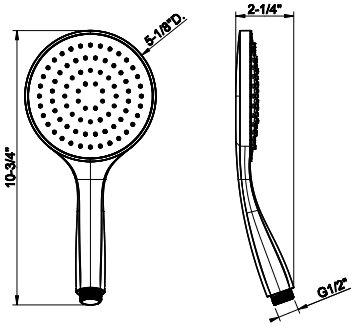

031	Chrome	189	726	Warm Bronze Br. PVD	465
149	Finox Br. Nickel	377	710	Brass PVD	435
299	Matte Black	377	727	Brass Br. PVD	465
147	Chrome Br.	377	246	Gold PVD	493
720	Nickel PVD	435	716	Gold Br. PVD	493
706	Black Metal PVD	435	187	Aged Bronze	465
707	Black Metal Br. PVD	465	713	Antique Brass	465
030	Copper PVD	435	845	Dark Bronze	465
708	Copper Br. PVD	465	279	Matte White	377
735	Warm Bronze PVD	435			

14376

Handshower with white insert
• 3-pattern spray
• Max flow rate 1.75 GPM



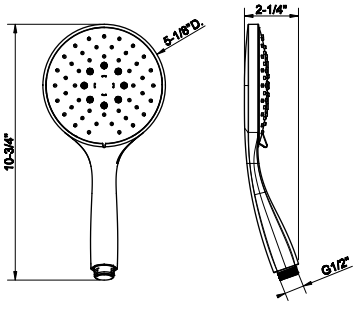

031	Chrome	390	726	Warm Bronze Br. PVD	656
149	Finox Br. Nickel	527	710	Brass PVD	616
299	Matte Black	527	727	Brass Br. PVD	656
147	Chrome Br.	527	246	Gold PVD	681
720	Nickel PVD	616	716	Gold Br. PVD	681
706	Black Metal PVD	616	187	Aged Bronze	656
707	Black Metal Br. PVD	656	713	Antique Brass	656
030	Copper PVD	616	845	Dark Bronze	656
708	Copper Br. PVD	656	279	Matte White	527
735	Warm Bronze PVD	616			

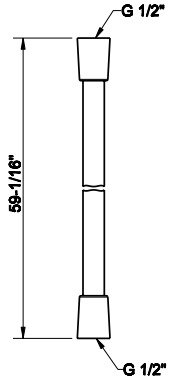

01637

59” flex hose



031	Chrome	134	726	Warm Bronze Br. PVD	214
149	Finox Br. Nickel	173	710	Brass PVD	203
299	Matte Black	173	727	Brass Br. PVD	214
147	Chrome Br.	173	246	Gold PVD	227
720	Nickel PVD	203	716	Gold Br. PVD	227
706	Black Metal PVD	203	187	Aged Bronze	214
707	Black Metal Br. PVD	214	713	Antique Brass	214
030	Copper PVD	203	845	Dark Bronze	214
708	Copper Br. PVD	214	279	Matte White	173
735	Warm Bronze PVD	203			

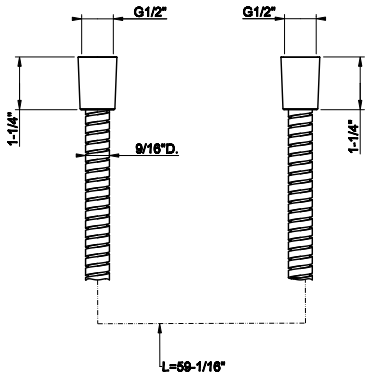

01724

Metal flexible hose, 59” length, 1/2” connector.



031	Chrome	196	726	Warm Bronze Br. PVD	308
149	Finox Br. Nickel	260	710	Brass PVD	288
299	Matte Black	260	727	Brass Br. PVD	308
147	Chrome Br.	260	246	Gold PVD	288
720	Nickel PVD	308	716	Gold Br. PVD	341
706	Black Metal PVD	288	187	Aged Bronze	308
707	Black Metal Br. PVD	308	713	Antique Brass	308
030	Copper PVD	288	845	Dark Bronze	308
708	Copper Br. PVD	308	279	Matte White	259
735	Warm Bronze PVD	288			

GESSI®



RETTANGOLO ACCESSORIES

20801

Wall-mounted soap dish, white



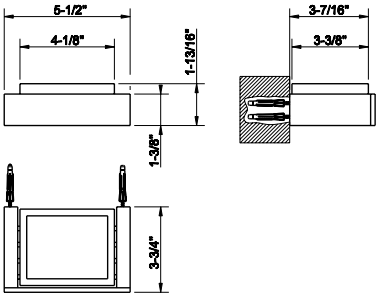

031	Chrome	663	708	Copper Br. PVD	1.048
149	Finox Br. Nickel	895	735	Warm Bronze PVD	981
299	Matte Black	895	726	Warm Bronze Br. PVD	1.048
720	Nickel PVD	981	710	Brass PVD	981
706	Black Metal PVD	981	727	Brass Br. PVD	1.048
707	Black Metal Br. PVD	1.048	187	Aged Bronze	1.048
030	Copper PVD	981	713	Antique Brass	1.048

20802

Wall-mounted soap dish, black



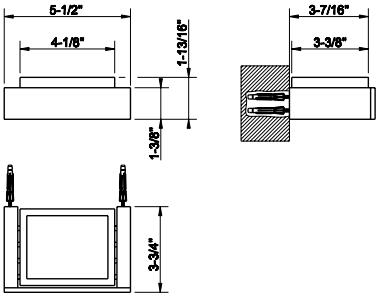

031	Chrome	663	708	Copper Br. PVD	1.048
149	Finox Br. Nickel	895	735	Warm Bronze PVD	981
299	Matte Black	895	726	Warm Bronze Br. PVD	1.048
720	Nickel PVD	981	710	Brass PVD	981
706	Black Metal PVD	981	727	Brass Br. PVD	1.048
707	Black Metal Br. PVD	1.048	187	Aged Bronze	1.048
030	Copper PVD	981	713	Antique Brass	1.048

20807

Wall-mounted holder, white



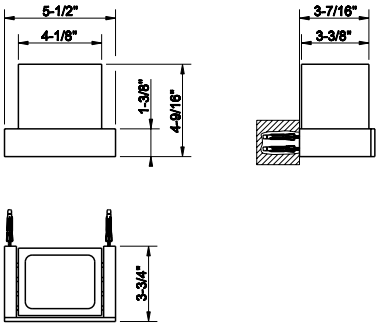

031	Chrome	736	708	Copper Br. PVD	1.164
149	Finox Br. Nickel	995	735	Warm Bronze PVD	1.090
299	Matte Black	995	726	Warm Bronze Br. PVD	1.164
720	Nickel PVD	1.090	710	Brass PVD	1.090
706	Black Metal PVD	1.090	727	Brass Br. PVD	1.164
707	Black Metal Br. PVD	1.164	187	Aged Bronze	1.164
030	Copper PVD	1.090	713	Antique Brass	1.164

20808

Wall-mounted holder, black



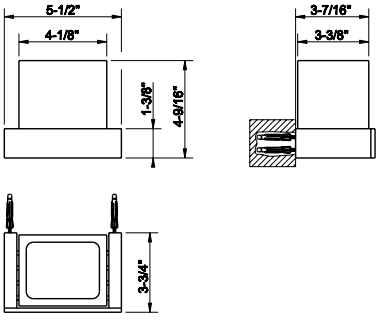

031	Chrome	736	708	Copper Br. PVD	1.164
149	Finox Br. Nickel	995	735	Warm Bronze PVD	1.090
299	Matte Black	995	726	Warm Bronze Br. PVD	1.164
720	Nickel PVD	1.090	710	Brass PVD	1.090
706	Black Metal PVD	1.090	727	Brass Br. PVD	1.164
707	Black Metal Br. PVD	1.164	187	Aged Bronze	1.164
030	Copper PVD	1.090	713	Antique Brass	1.164

RETTANGOLO ACCESSORIES

20813

Wall-mounted liquid soap dispenser , white

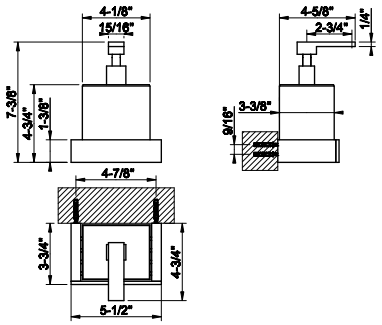



031	Chrome	994	708	Copper Br. PVD	1.570
149	Finox Br. Nickel	1.341	735	Warm Bronze PVD	1.470
299	Matte Black	1.341	726	Warm Bronze Br. PVD	1.570
720	Nickel PVD	1.470	710	Brass PVD	1.470
706	Black Metal PVD	1.470	727	Brass Br. PVD	1.570
707	Black Metal Br. PVD	1.570	187	Aged Bronze	1.570
030	Copper PVD	1.470	713	Antique Brass	1.570

20814

Wall-mounted liquid soap dispenser - black

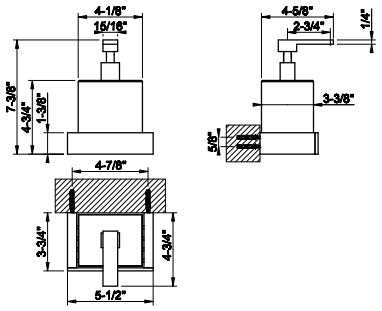



031	Chrome	994	708	Copper Br. PVD	1.570
149	Finox Br. Nickel	1.341	735	Warm Bronze PVD	1.470
299	Matte Black	1.341	726	Warm Bronze Br. PVD	1.570
720	Nickel PVD	1.470	710	Brass PVD	1.470
706	Black Metal PVD	1.470	727	Brass Br. PVD	1.570
707	Black Metal Br. PVD	1.570	187	Aged Bronze	1.570
030	Copper PVD	1.470	713	Antique Brass	1.570

20819

White wall-mounted brush holder

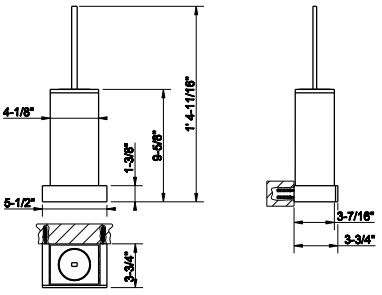



031	Chrome	1.064	708	Copper Br. PVD	1.676
149	Finox Br. Nickel	1.376	735	Warm Bronze PVD	1.570
299	Matte Black	1.324	726	Warm Bronze Br. PVD	1.676
720	Nickel PVD	1.570	710	Brass PVD	1.570
706	Black Metal PVD	1.570	727	Brass Br. PVD	1.676
707	Black Metal Br. PVD	1.676	187	Aged Bronze	1.683
030	Copper PVD	1.570	713	Antique Brass	1.683

20820

Black wall-mounted brush holder

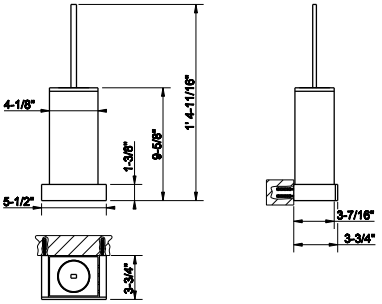



031	Chrome	1.064	708	Copper Br. PVD	1.676
149	Finox Br. Nickel	1.376	735	Warm Bronze PVD	1.570
299	Matte Black	1.324	726	Warm Bronze Br. PVD	1.676
720	Nickel PVD	1.570	710	Brass PVD	1.570
706	Black Metal PVD	1.570	727	Brass Br. PVD	1.676
707	Black Metal Br. PVD	1.676	187	Aged Bronze	1.683
030	Copper PVD	1.570	713	Antique Brass	1.683

20825

White standing soap holder



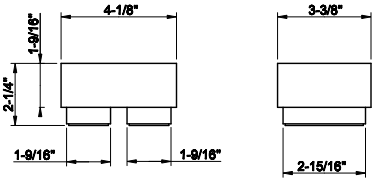

031	Chrome	408	708	Copper Br. PVD	648
149	Finox Br. Nickel	488	735	Warm Bronze PVD	605
299	Matte Black	493	726	Warm Bronze Br. PVD	648
720	Nickel PVD	605	710	Brass PVD	605
706	Black Metal PVD	605	727	Brass Br. PVD	648
707	Black Metal Br. PVD	648	187	Aged Bronze	644
030	Copper PVD	605	713	Antique Brass	644

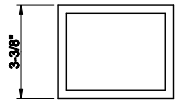

20826

Black standing soap holder



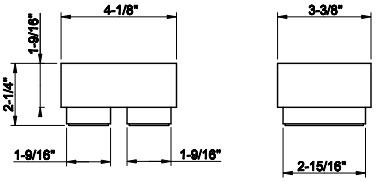

031	Chrome	408	708	Copper Br. PVD	648
149	Finox Br. Nickel	488	735	Warm Bronze PVD	605
299	Matte Black	493	726	Warm Bronze Br. PVD	648
720	Nickel PVD	605	710	Brass PVD	605
706	Black Metal PVD	605	727	Brass Br. PVD	648
707	Black Metal Br. PVD	648	187	Aged Bronze	644
030	Copper PVD	605	713	Antique Brass	644

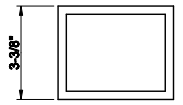

20831

Standing tumbler holder white



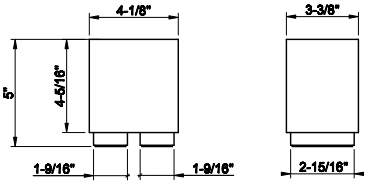

031	Chrome	408	708	Copper Br. PVD	742
149	Finox Br. Nickel	488	735	Warm Bronze PVD	605
299	Matte Black	493	726	Warm Bronze Br. PVD	742
720	Nickel PVD	695	710	Brass PVD	605
706	Black Metal PVD	605	727	Brass Br. PVD	742
707	Black Metal Br. PVD	742	187	Aged Bronze	644
030	Copper PVD	605	713	Antique Brass	644

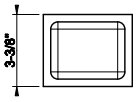

20832

Standing tumbler holder black



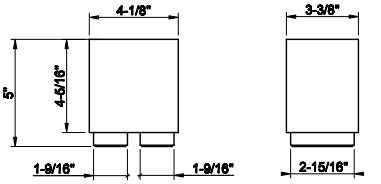

031	Chrome	408	708	Copper Br. PVD	648
149	Finox Br. Nickel	488	735	Warm Bronze PVD	605
299	Matte Black	493	726	Warm Bronze Br. PVD	648
720	Nickel PVD	605	710	Brass PVD	605
706	Black Metal PVD	605	727	Brass Br. PVD	648
707	Black Metal Br. PVD	648	187	Aged Bronze	644
030	Copper PVD	605	713	Antique Brass	644

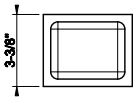

GESSI

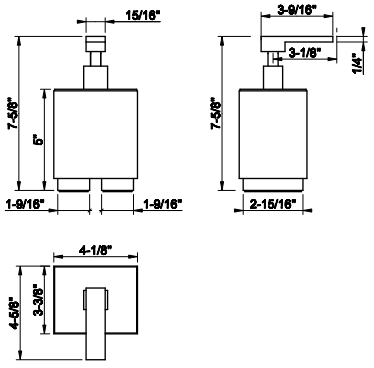

20837

Standing Soap dispenser white



031	Chrome	704	708	Copper Br. PVD	1.114
149	Finox Br. Nickel	845	735	Warm Bronze PVD	1.039
299	Matte Black	849	726	Warm Bronze Br. PVD	1.114
720	Nickel PVD	1.039	710	Brass PVD	1.039
706	Black Metal PVD	1.039	727	Brass Br. PVD	1.114
707	Black Metal Br. PVD	1.114	187	Aged Bronze	1.114
030	Copper PVD	1.039	713	Antique Brass	1.114

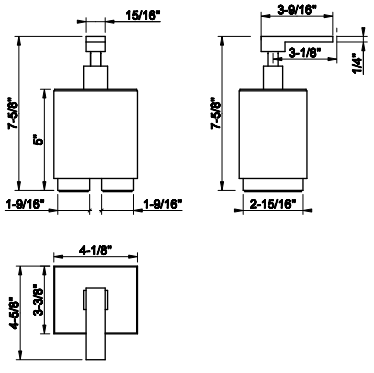

20838

Black standing Soap dispenser



031	Chrome	704	708	Copper Br. PVD	1.282
149	Finox Br. Nickel	845	735	Warm Bronze PVD	1.039
299	Matte Black	849	726	Warm Bronze Br. PVD	1.282
720	Nickel PVD	1.196	710	Brass PVD	1.039
706	Black Metal PVD	1.039	727	Brass Br. PVD	1.282
707	Black Metal Br. PVD	1.282	187	Aged Bronze	1.114
030	Copper PVD	1.039	713	Antique Brass	1.114

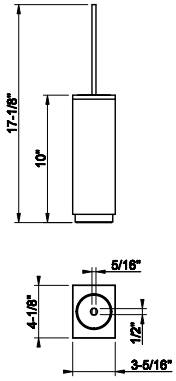

20843

White standing brush holder



031	Chrome	732	708	Copper Br. PVD	1.154
149	Finox Br. Nickel	957	735	Warm Bronze PVD	1.081
299	Matte Black	922	726	Warm Bronze Br. PVD	1.154
720	Nickel PVD	1.081	710	Brass PVD	1.081
706	Black Metal PVD	1.081	727	Brass Br. PVD	1.154
707	Black Metal Br. PVD	1.154	187	Aged Bronze	1.154
030	Copper PVD	1.081	713	Antique Brass	1.154

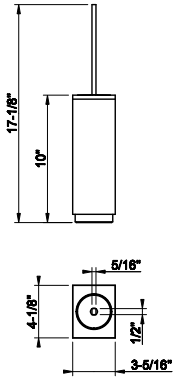

20844

Black standing brush holder



031	Chrome	732	708	Copper Br. PVD	1.154
149	Finox Br. Nickel	957	735	Warm Bronze PVD	1.081
299	Matte Black	922	726	Warm Bronze Br. PVD	1.154
720	Nickel PVD	1.081	710	Brass PVD	1.081
706	Black Metal PVD	1.081	727	Brass Br. PVD	1.154
707	Black Metal Br. PVD	1.154	187	Aged Bronze	1.156
030	Copper PVD	1.081	713	Antique Brass	1.156

20849

Wall-mounted tissue holder with cover



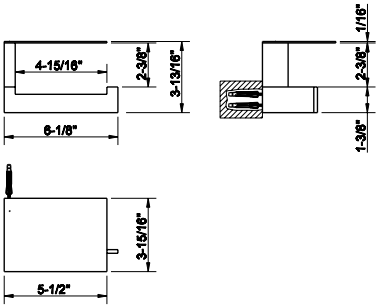

031	Chrome	728	708	Copper Br. PVD	1.150
149	Finox Br. Nickel	984	735	Warm Bronze PVD	1.078
299	Matte Black	984	726	Warm Bronze Br. PVD	1.150
720	Nickel PVD	1.078	710	Brass PVD	1.078
706	Black Metal PVD	1.078	727	Brass Br. PVD	1.150
707	Black Metal Br. PVD	1.150	187	Aged Bronze	1.150
030	Copper PVD	1.078	713	Antique Brass	1.150

20855

Wall-mounted tissue holder
• Vertical or horizontal application



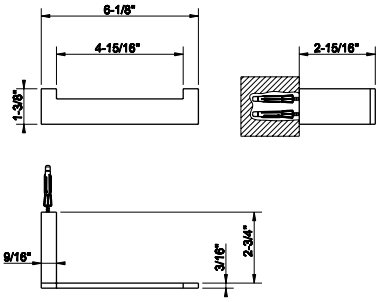

031	Chrome	435	708	Copper Br. PVD	688
149	Finox Br. Nickel	589	735	Warm Bronze PVD	644
299	Matte Black	589	726	Warm Bronze Br. PVD	688
720	Nickel PVD	644	710	Brass PVD	644
706	Black Metal PVD	644	727	Brass Br. PVD	688
707	Black Metal Br. PVD	688	187	Aged Bronze	688
030	Copper PVD	644	713	Antique Brass	688

20867

Wall-mounted column with paper roll holder and white brush holder



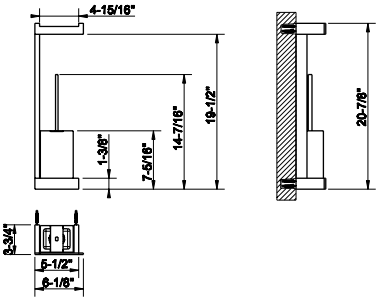

031	Chrome	1.438	708	Copper Br. PVD	2.272
149	Finox Br. Nickel	1.805	735	Warm Bronze PVD	2.127
299	Matte Black	1.817	726	Warm Bronze Br. PVD	2.272
720	Nickel PVD	2.127	710	Brass PVD	2.127
706	Black Metal PVD	2.127	727	Brass Br. PVD	2.272
707	Black Metal Br. PVD	2.272	187	Aged Bronze	2.274
030	Copper PVD	2.127	713	Antique Brass	2.274

20868

Wall-mounted column with paper roll holder and black brush holder



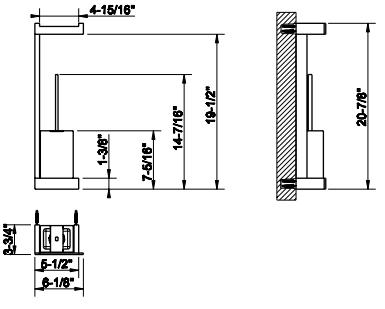

031	Chrome	1.438	708	Copper Br. PVD	2.272
149	Finox Br. Nickel	1.805	735	Warm Bronze PVD	2.127
299	Matte Black	1.817	726	Warm Bronze Br. PVD	2.272
720	Nickel PVD	2.127	710	Brass PVD	2.127
706	Black Metal PVD	2.127	727	Brass Br. PVD	2.272
707	Black Metal Br. PVD	2.272	187	Aged Bronze	2.274
030	Copper PVD	2.127	713	Antique Brass	2.274

GESSI

20933

Standing set with paper roll holder and white brush holder

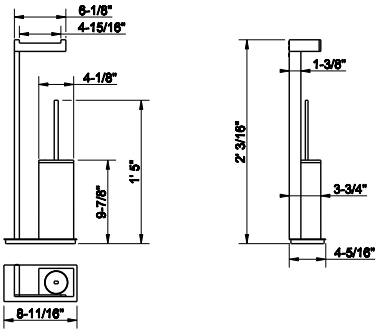

031	Chrome	1.478	708	Copper Br. PVD	2.334
149	Finox Br. Nickel	1.858	735	Warm Bronze PVD	2.184
299	Matte Black	1.868	726	Warm Bronze Br. PVD	2.334
720	Nickel PVD	2.184	710	Brass PVD	2.184
706	Black Metal PVD	2.184	727	Brass Br. PVD	2.334
707	Black Metal Br. PVD	2.334	187	Aged Bronze	2.337
030	Copper PVD	2.184	713	Antique Brass	2.337



20934

Standing set with paper roll holder and black brush holder

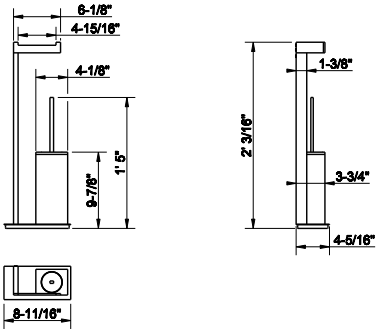

031	Chrome	1.478	708	Copper Br. PVD	2.334
149	Finox Br. Nickel	1.858	735	Warm Bronze PVD	2.184
299	Matte Black	1.868	726	Warm Bronze Br. PVD	2.334
720	Nickel PVD	2.184	710	Brass PVD	2.184
706	Black Metal PVD	2.184	727	Brass Br. PVD	2.334
707	Black Metal Br. PVD	2.334	187	Aged Bronze	2.337
030	Copper PVD	2.184	713	Antique Brass	2.337



20939

Freestanding towel rack

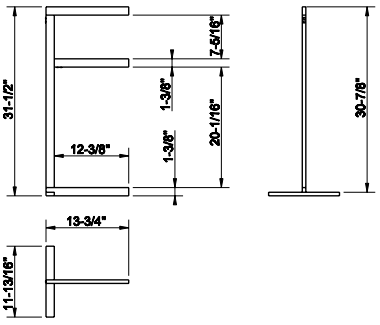

031	Chrome	2.243	708	Copper Br. PVD	3.542
149	Finox Br. Nickel	3.028	735	Warm Bronze PVD	3.319
299	Matte Black	3.028	726	Warm Bronze Br. PVD	3.542
720	Nickel PVD	3.319	710	Brass PVD	3.319
706	Black Metal PVD	3.319	727	Brass Br. PVD	3.542
707	Black Metal Br. PVD	3.542	187	Aged Bronze	3.542
030	Copper PVD	3.319	713	Antique Brass	3.542



20915

Wall-mounted double towel rail

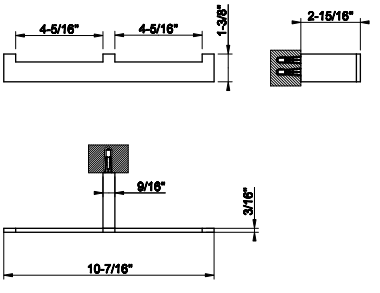

031	Chrome	644	708	Copper Br. PVD	1.017
149	Finox Br. Nickel	832	735	Warm Bronze PVD	954
299	Matte Black	837	726	Warm Bronze Br. PVD	1.017
720	Nickel PVD	954	710	Brass PVD	954
706	Black Metal PVD	954	727	Brass Br. PVD	1.017
707	Black Metal Br. PVD	1.017	187	Aged Bronze	1.019
030	Copper PVD	954	713	Antique Brass	1.019

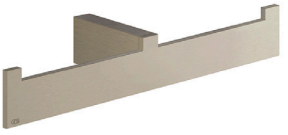

20897

12” towel bar



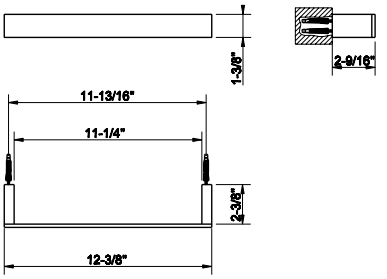

031	Chrome	582	708	Copper Br. PVD	918
149	Finox Br. Nickel	786	735	Warm Bronze PVD	862
299	Matte Black	786	726	Warm Bronze Br. PVD	918
720	Nickel PVD	862	710	Brass PVD	862
706	Black Metal PVD	862	727	Brass Br. PVD	918
707	Black Metal Br. PVD	918	187	Aged Bronze	918
030	Copper PVD	862	713	Antique Brass	918

20900

18” towel bar



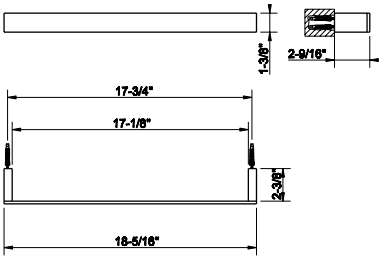

031	Chrome	627	708	Copper Br. PVD	992
149	Finox Br. Nickel	847	735	Warm Bronze PVD	929
299	Matte Black	847	726	Warm Bronze Br. PVD	992
720	Nickel PVD	929	710	Brass PVD	929
706	Black Metal PVD	929	727	Brass Br. PVD	992
707	Black Metal Br. PVD	992	187	Aged Bronze	992
030	Copper PVD	929	713	Antique Brass	992

20903

24” towel bar



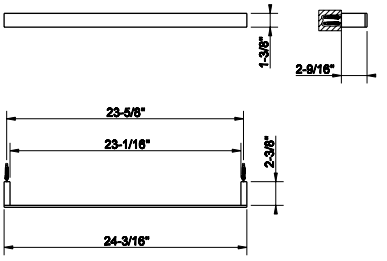

031	Chrome	728	708	Copper Br. PVD	1.150
149	Finox Br. Nickel	984	735	Warm Bronze PVD	1.078
299	Matte Black	984	726	Warm Bronze Br. PVD	1.150
720	Nickel PVD	1.078	710	Brass PVD	1.078
706	Black Metal PVD	1.078	727	Brass Br. PVD	1.150
707	Black Metal Br. PVD	1.150	187	Aged Bronze	1.150
030	Copper PVD	1.078	713	Antique Brass	1.150

20909

Towel ring



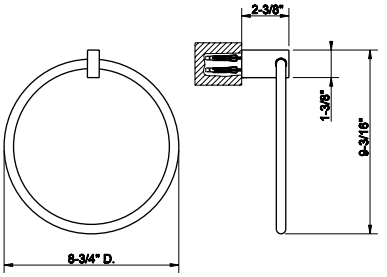

031	Chrome	517	708	Copper Br. PVD	817
149	Finox Br. Nickel	699	735	Warm Bronze PVD	765
299	Matte Black	699	726	Warm Bronze Br. PVD	817
720	Nickel PVD	765	710	Brass PVD	765
706	Black Metal PVD	765	727	Brass Br. PVD	817
707	Black Metal Br. PVD	817	187	Aged Bronze	817
030	Copper PVD	765	713	Antique Brass	817

20921

Wall-mounted garment hook

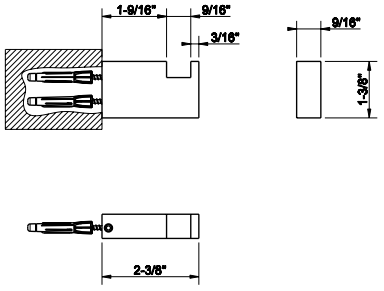



031	Chrome	289	708	Copper Br. PVD	457
149	Finox Br. Nickel	390	735	Warm Bronze PVD	427
299	Matte Black	390	726	Warm Bronze Br. PVD	457
706	Black Metal PVD	427	710	Brass PVD	427
707	Black Metal Br. PVD	457	727	Brass Br. PVD	457
030	Copper PVD	427			

20961

30 cm towel rail for glass fixing

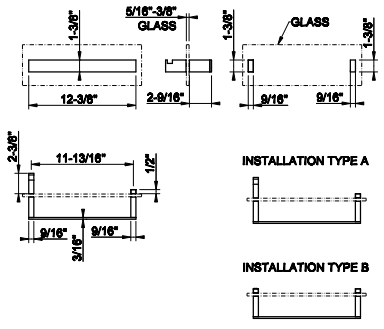

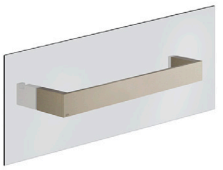

031	Chrome	1.340	708	Copper Br. PVD	2.118
149	Finox Br. Nickel	1.808	735	Warm Bronze PVD	1.980
299	Matte Black	1.808	726	Warm Bronze Br. PVD	2.118
720	Nickel PVD	1.980	710	Brass PVD	1.980
706	Black Metal PVD	1.980	727	Brass Br. PVD	2.118
707	Black Metal Br. PVD	2.118	187	Aged Bronze	2.118
030	Copper PVD	1.980	713	Antique Brass	2.118

20963

45 cm towel rail for glass fixing

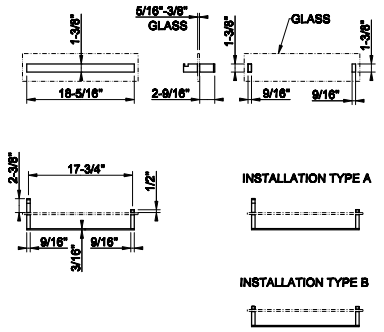

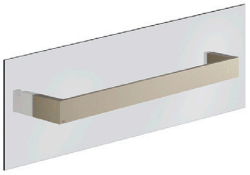

031	Chrome	1.430	708	Copper Br. PVD	2.258
149	Finox Br. Nickel	1.930	735	Warm Bronze PVD	2.118
299	Matte Black	1.930	726	Warm Bronze Br. PVD	2.258
720	Nickel PVD	2.118	710	Brass PVD	2.118
706	Black Metal PVD	2.118	727	Brass Br. PVD	2.258
707	Black Metal Br. PVD	2.258	187	Aged Bronze	2.258
030	Copper PVD	2.118	713	Antique Brass	2.258

20965

60 cm towel rail for glass fixing

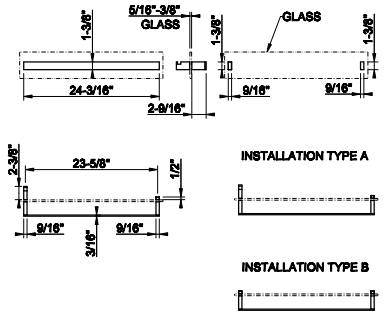

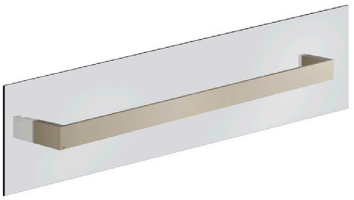

031	Chrome	1.508	708	Copper Br. PVD	2.383
149	Finox Br. Nickel	2.038	735	Warm Bronze PVD	2.233
299	Matte Black	2.038	726	Warm Bronze Br. PVD	2.383
720	Nickel PVD	2.233	710	Brass PVD	2.233
706	Black Metal PVD	2.233	727	Brass Br. PVD	2.383
707	Black Metal Br. PVD	2.383	187	Aged Bronze	2.383
030	Copper PVD	2.233	713	Antique Brass	2.383

20861

Corner shelf



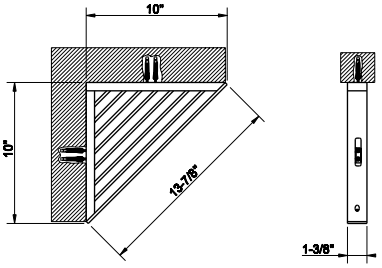

031	Chrome	957	708	Copper Br. PVD	1.513
149	Finox Br. Nickel	1.293	735	Warm Bronze PVD	1.417
299	Matte Black	1.293	726	Warm Bronze Br. PVD	1.513
720	Nickel PVD	1.417	710	Brass PVD	1.417
706	Black Metal PVD	1.417	727	Brass Br. PVD	1.513
707	Black Metal Br. PVD	1.513	187	Aged Bronze	1.513
030	Copper PVD	1.417	713	Antique Brass	1.513

20947

Shelf 30 cm



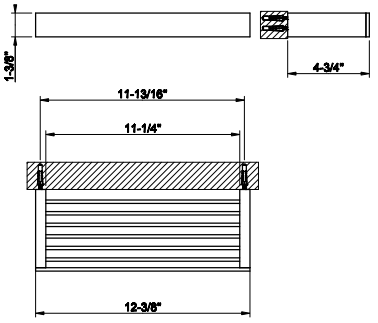

031	Chrome	810	708	Copper Br. PVD	1.282
149	Finox Br. Nickel	1.056	735	Warm Bronze PVD	1.196
299	Matte Black	1.056	726	Warm Bronze Br. PVD	1.282
720	Nickel PVD	1.196	710	Brass PVD	1.196
706	Black Metal PVD	1.196	727	Brass Br. PVD	1.282
707	Black Metal Br. PVD	1.282	187	Aged Bronze	1.279
030	Copper PVD	1.196	713	Antique Brass	1.279

20950

Shelf 60 cm

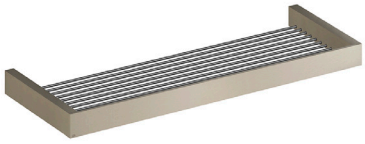

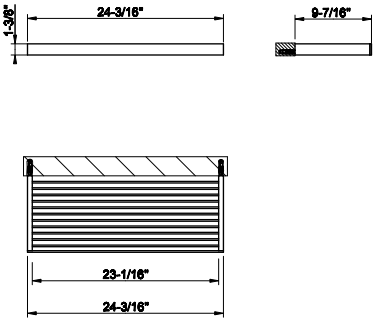

031	Chrome	1.483	708	Copper Br. PVD	2.342
149	Finox Br. Nickel	1.922	735	Warm Bronze PVD	2.192
299	Matte Black	2.005	726	Warm Bronze Br. PVD	2.342
720	Nickel PVD	2.192	710	Brass PVD	2.192
706	Black Metal PVD	2.192	727	Brass Br. PVD	2.342
707	Black Metal Br. PVD	2.342	187	Aged Bronze	2.344
030	Copper PVD	2.192	713	Antique Brass	2.344

20945

Shelf 60 cm



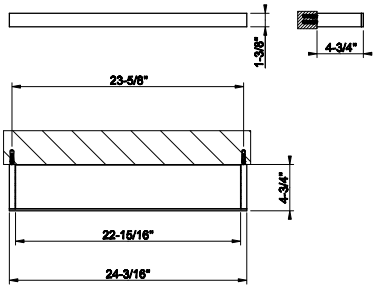

031	Chrome	1.126	708	Copper Br. PVD	1.778
149	Finox Br. Nickel	1.459	735	Warm Bronze PVD	1.666
299	Matte Black	1.468	726	Warm Bronze Br. PVD	1.778
720	Nickel PVD	1.666	710	Brass PVD	1.666
706	Black Metal PVD	1.666	727	Brass Br. PVD	1.778
707	Black Metal Br. PVD	1.778	187	Aged Bronze	1.781
030	Copper PVD	1.666	713	Antique Brass	1.781

20988

adjustable magnifying (2x) mirror

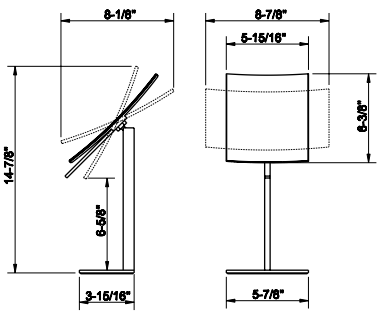



031	Chrome	957	708	Copper Br. PVD	1.513
149	Finox Br. Nickel	1.293	735	Warm Bronze PVD	1.417
299	Matte Black	1.293	726	Warm Bronze Br. PVD	1.513
720	Nickel PVD	1.417	710	Brass PVD	1.417
706	Black Metal PVD	1.417	727	Brass Br. PVD	1.513
707	Black Metal Br. PVD	1.513	187	Aged Bronze	1.513
030	Copper PVD	1.417	713	Antique Brass	1.513

20990

White waste-paper basket

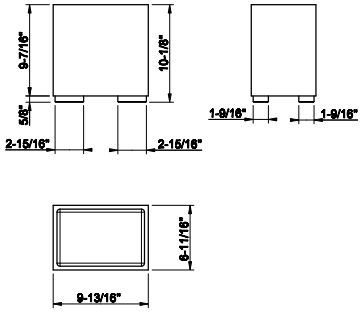



031	Chrome	1.111	708	Copper Br. PVD	1.751
149	Finox Br. Nickel	1.211	735	Warm Bronze PVD	1.640
299	Matte Black	1.207	726	Warm Bronze Br. PVD	1.751
720	Nickel PVD	1.640	710	Brass PVD	1.640
706	Black Metal PVD	1.640	727	Brass Br. PVD	1.751
707	Black Metal Br. PVD	1.751	187	Aged Bronze	1.758
030	Copper PVD	1.640	713	Antique Brass	1.758

20991

Black waste-paper basket

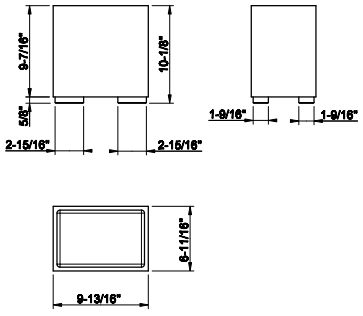



031	Chrome	1.111	708	Copper Br. PVD	1.751
149	Finox Br. Nickel	1.211	735	Warm Bronze PVD	1.640
299	Matte Black	1.207	726	Warm Bronze Br. PVD	1.751
720	Nickel PVD	1.640	710	Brass PVD	1.640
706	Black Metal PVD	1.640	727	Brass Br. PVD	1.751
707	Black Metal Br. PVD	1.751	187	Aged Bronze	1.758
030	Copper PVD	1.640	713	Antique Brass	1.758

58424

Safety grip-handle for bathtub and shower enclosure
• 18" length

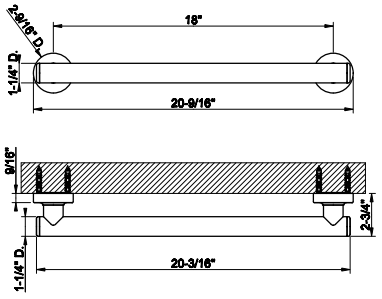



031	Chrome	1.932	708	Copper Br. PVD	3.056
149	Finox Br. Nickel	2.611	735	Warm Bronze PVD	2.862
299	Matte Black	2.611	726	Warm Bronze Br. PVD	3.054
720	Nickel PVD	2.862	710	Brass PVD	2.862
706	Black Metal PVD	2.862	727	Brass Br. PVD	3.056
707	Black Metal Br. PVD	3.056	187	Aged Bronze	3.056
030	Copper PVD	2.862	713	Antique Brass	3.056



RETTANGOLO TOTAL LOOK

58430

Safety grip-handle for bathtub and shower enclosure
• 24” length



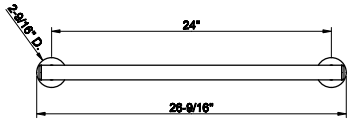

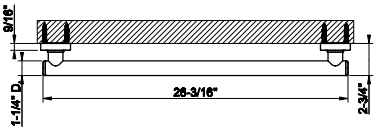

031	Chrome	1.967	708	Copper Br. PVD	3.108
149	Finox Br. Nickel	2.656	735	Warm Bronze PVD	2.911
299	Matte Black	2.656	726	Warm Bronze Br. PVD	3.108
720	Nickel PVD	2.911	710	Brass PVD	2.911
706	Black Metal PVD	2.911	727	Brass Br. PVD	3.108
707	Black Metal Br. PVD	3.108	187	Aged Bronze	3.108
030	Copper PVD	2.911	713	Antique Brass	3.108

58432

Safety grip-handle for bathtub and shower enclosure
• 36” length



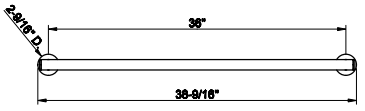

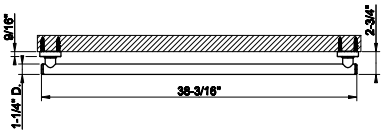

031	Chrome	2.165	708	Copper Br. PVD	3.419
149	Finox Br. Nickel	2.921	735	Warm Bronze PVD	3.203
299	Matte Black	2.921	726	Warm Bronze Br. PVD	3.419
720	Nickel PVD	3.203	710	Brass PVD	3.203
706	Black Metal PVD	3.203	727	Brass Br. PVD	3.419
707	Black Metal Br. PVD	3.419	187	Aged Bronze	3.419
030	Copper PVD	3.203	713	Antique Brass	3.419

20893

Safety grip-handle for bathtub and shower enclosure
• 18” length



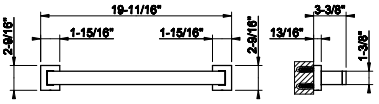

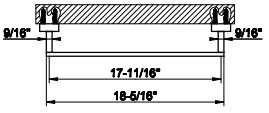

031	Chrome	927	708	Copper Br. PVD	1.464
149	Finox Br. Nickel	1.252	735	Warm Bronze PVD	1.371
299	Matte Black	1.252	726	Warm Bronze Br. PVD	1.464
720	Nickel PVD	1.371	710	Brass PVD	1.371
706	Black Metal PVD	1.371	727	Brass Br. PVD	1.464
707	Black Metal Br. PVD	1.464	187	Aged Bronze	1.464
030	Copper PVD	1.371	713	Antique Brass	1.464

54611

Flush Actuator Plate
•Stainless steel
•Compatible with GEBERIT models: 111.597.001, 111.902.005, 111.798.00.1, 111.335.00.5
•Without visible fixing system



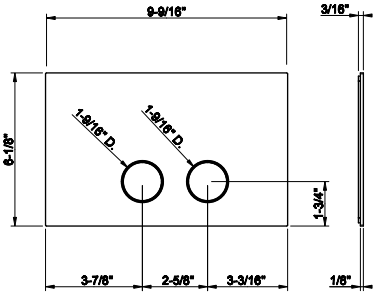

031	Chrome	1.228	708	Copper Br. PVD	1.813
239	Steel Br.	1.228	735	Warm Bronze PVD	1.813
275	Matte Cipria	1.653	726	Warm Bronze Br. PVD	1.813
273	Matte Greige	1.653	710	Brass PVD	1.813
280	Matte Ocra	1.653	727	Brass Br. PVD	1.813
281	Matte Coral	1.653	246	Gold PVD	2.058
276	Matte Agave	1.653	716	Gold Br. PVD	2.058
299	Matte Black	1.653	187	Aged Bronze	1.813
720	Nickel PVD	1.813	713	Antique Brass	1.813
706	Black Metal PVD	1.813	845	Dark Bronze	1.813
707	Black Metal Br. PVD	1.813	279	Matte White	1.653
030	Copper PVD	1.813			

RETTANGOLO TOTAL LOOK

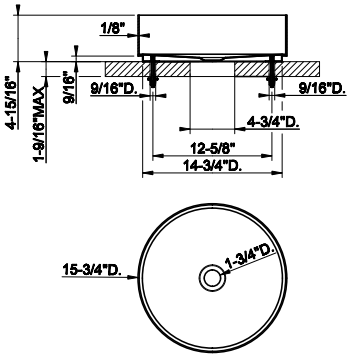

54601

Counter washbasin In stainless steel, without overflow waste.
Without basin waste. It can be combined with waste 54597.



239	Steel Br.	2.449	708	Copper Br. PVD	6.986
299	Matte Black	4.431	726	Warm Bronze Br. PVD	6.986
707	Black Metal Br. PVD	6.986	727	Brass Br. PVD	6.986

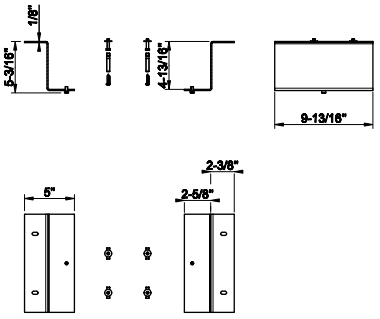

01578

Undermounted washbasin brackets for 54601, 54605, 54606.



031	Chrome	428

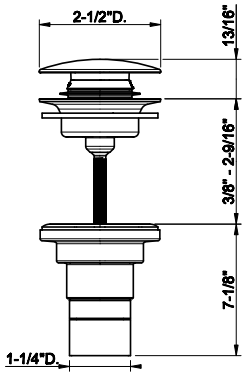

54597

1 1/4” push drain with or without overflow feature
- Recommended for Gessi 316 Collection



239	Steel Br.	212	708	Copper Br. PVD	313
299	Matte Black	287	726	Warm Bronze Br. PVD	313
707	Black Metal Br. PVD	313	727	Brass Br. PVD	313

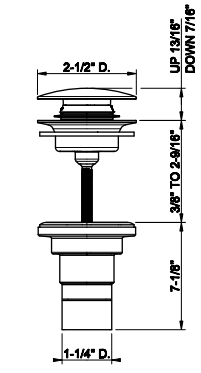

01427

1 1/4” push drain with or without overflow feature



031	Chrome	134	030	Copper PVD	379
239	Steel Br.	134	708	Copper Br. PVD	379
275	Matte Cipria	326	735	Warm Bronze PVD	379
273	Matte Greige	326	726	Warm Bronze Br. PVD	379
277	Glossy Ocra	326	710	Brass PVD	379
278	Glossy Coral	326	727	Brass Br. PVD	379
276	Matte Agave	326	246	Gold PVD	405
299	Matte Black	386	716	Gold Br. PVD	405
720	Nickel PVD	379	187	Aged Bronze	379
706	Black Metal PVD	379	713	Antique Brass	379
707	Black Metal Br. PVD	379	845	Dark Bronze	379



goccia

35201



Single lever washbasin mixer without pop-up assembly
- Spout projection 7-7/16”
- Height 12-3/16”
- Drain not included - See DRAINSsection
- Max flow rate 1.2 GPM
- ADA compliant

031	Chrome	1.215	125	Copper Br. GHRC	1.579
299	Matte Black	1.639	126	Black Metal Br. GHRC	1.579
147	Chrome Br.	1.639	713	Antique Brass	1.919
123	Copper GHRC	1.459	279	Matte White	1.639
124	Black Metal GHRC	1.459			

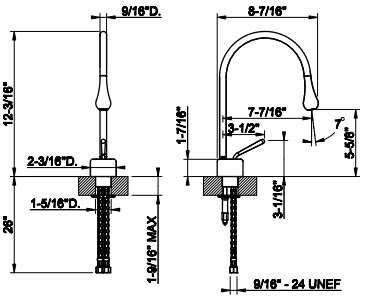

35204



Tall single lever washbasin mixer without pop-up assembly
- Spout projection 7-7/16”
- Height 15-1/4”
- Drain not included - See DRAINS section
- Max flow rate 1.2 GPM
- ADA compliant

031	Chrome	1.581	125	Copper Br. GHRC	2.056
299	Matte Black	2.135	126	Black Metal Br. GHRC	2.056
147	Chrome Br.	2.135	713	Antique Brass	2.497
123	Copper GHRC	1.898	279	Matte White	2.135
124	Black Metal GHRC	1.898			

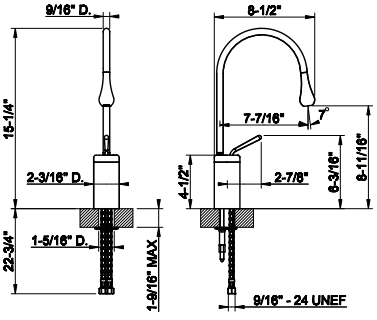

35205



Tall single lever washbasin mixer without pop-up assembly
- Spout projection 10-3/16”
- Height 17-1/4”
- Drain not included - See DRAINS section
- Max flow rate 1.2 GPM
- ADA compliant

031	Chrome	1.581	125	Copper Br. GHRC	2.056
299	Matte Black	2.135	126	Black Metal Br. GHRC	2.056
147	Chrome Br.	2.135	713	Antique Brass	2.497
123	Copper GHRC	1.898	279	Matte White	2.135
124	Black Metal GHRC	1.898			

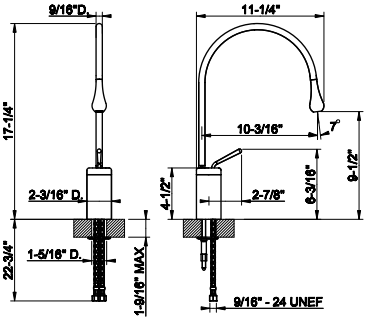

35209



Tall single lever washbasin mixer without pop-up assembly
- Spout projection 10-3/16”
- Height 20-5/8”
- Drain not included - See DRAINS section
- Max flow rate 1.2 GPM
- ADA compliant

031	Chrome	1.763	125	Copper Br. GHRC	2.291
299	Matte Black	2.381	126	Black Metal Br. GHRC	2.291
147	Chrome Br.	2.381	713	Antique Brass	2.787
123	Copper GHRC	2.115	279	Matte White	2.381
124	Black Metal GHRC	2.115			

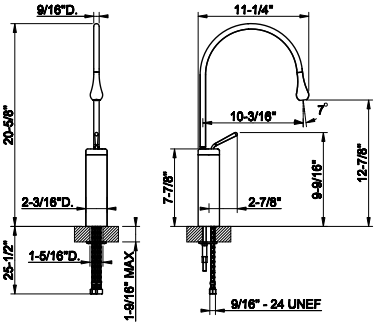

GOCCIA

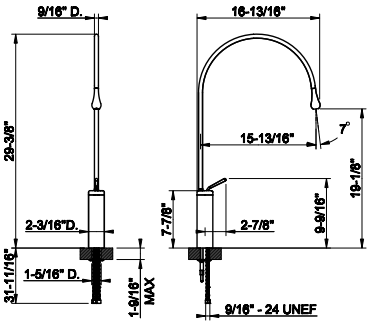

35210

Tall single lever washbasin mixer without pop-up assembly
- Spout projection 15-13/16”
- Height 29-3/8”
- Drain not included - SeeDRAINS section
- Max flow rate 1.2 GPM
- ADA compliant



031	Chrome	1.837	125	Copper Br. GHRC	2.389
299	Matte Black	2.481	126	Black Metal Br. GHRC	2.389
147	Chrome Br.	2.481	713	Antique Brass	2.903
123	Copper GHRC	2.205	279	Matte White	2.481
124	Black Metal GHRC	2.205			

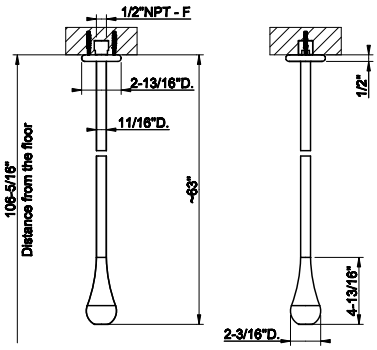

35299

Ceiling-mounted washbasin spout only
- Spout length 63”
- Drain not included - See DRAINS section
- Requires mixer control 35300 or33744+35344
- Max flow rate 1.2 GPM



031	Chrome	2.204	125	Copper Br. GHRC	2.866
299	Matte Black	2.976	126	Black Metal Br. GHRC	2.866
147	Chrome Br.	2.976	713	Antique Brass	3.483
123	Copper GHRC	2.644	279	Matte White	2.976
124	Black Metal GHRC	2.644			

35399

Ceiling-mounted washbasin spout only
- Custom length: Minimum 7-1/16" - Maximum 75-11/16"
- Drain not included - See DRAINS section
- Requires mixer control 35300 or 33744+35344
- Max flow rate 1.2 GPM



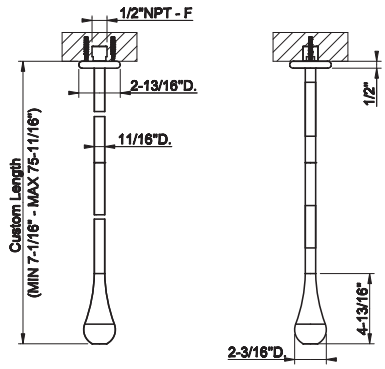

031	Chrome	2.938	125	Copper Br. GHRC	3.818
299	Matte Black	3.966	126	Black Metal Br. GHRC	3.818
147	Chrome Br.	3.966	713	Antique Brass	4.641
123	Copper GHRC	3.525	279	Matte White	3.966
124	Black Metal GHRC	3.525			

35300

Deck-mounted washbasin mixer control
- For spouts 35299, 35399, and 35319
- Drain not included - See DRAINS section
- ADA compliant



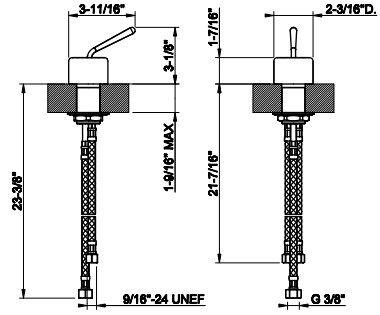

031	Chrome	627	125	Copper Br. GHRC	816
299	Matte Black	847	126	Black Metal Br. GHRC	816
147	Chrome Br.	847	713	Antique Brass	992
123	Copper GHRC	753	279	Matte White	847
124	Black Metal GHRC	753			

GOCCIA

35344+33744

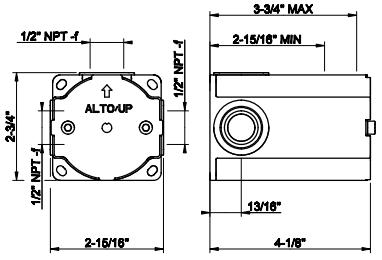

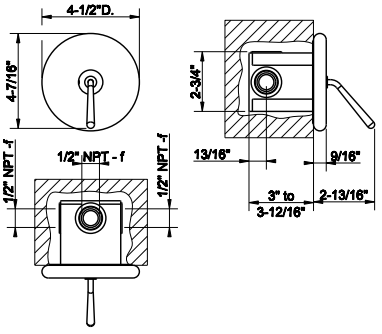

35344

Wall-mounted washbasin mixer control rough valve
- 1/2" connections
- Drain not included - See DRAINS section

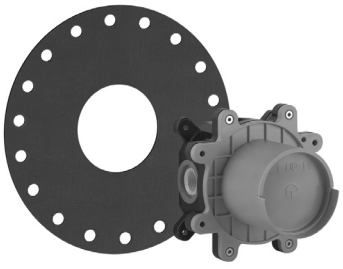

031	Chrome	582

33744

TRIM PARTS ONLY Wall-mounted washbasin mixer control
- For spouts 35299, 35399 and 35319
- Drain not included
- Requires in-wallrough valve 35344
- ADA compliant



031	Chrome	957	125	Copper Br. GHRC	1.276
299	Matte Black	1.325	126	Black Metal Br. GHRC	1.276
147	Chrome Br.	1.325	713	Antique Brass	1.551
123	Copper GHRC	1.179	279	Matte White	1.325
124	Black Metal GHRC	1.179			

35287+35284

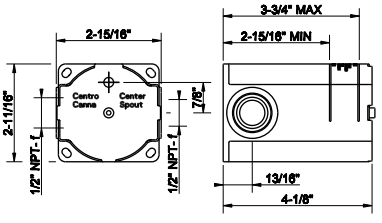

35287

In wall rough valve only for wall mounted washbasin mixer trim kit.

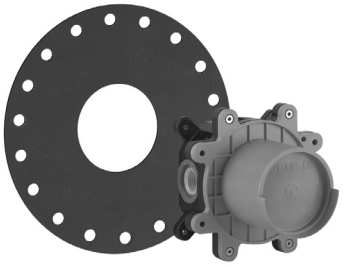

031	Chrome	517

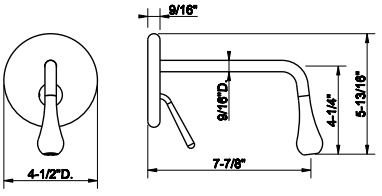

35284

TRIM PARTS ONLY .Wall mounted single lever washbasin mixer
- Spout projection 7-7/8"
- 1/2" connections
- Drain not included - SeeDRAINS section
- Requires in wall rough valve 35287.
- Max flow rate 1.2 GPM
- ADA compliant



031	Chrome	1.463	125	Copper Br. GHRC	1.903
299	Matte Black	1.976	126	Black Metal Br. GHRC	1.903
147	Chrome Br.	1.976	713	Antique Brass	2.312
123	Copper GHRC	1.757	279	Matte White	1.976
124	Black Metal GHRC	1.757			

35287

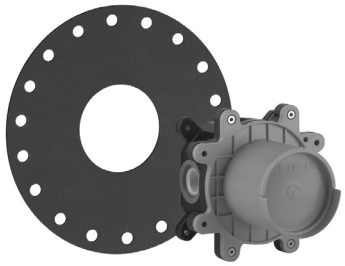

In wall rough valve only for wall mounted washbasin mixer trim kit.

031	Chrome	517

35287+35286

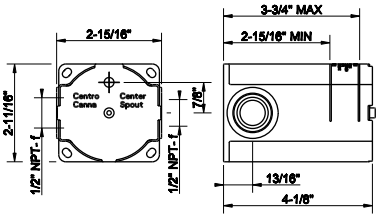

35286



TRIM PARTS ONLY .Wall mounted single lever washbasin mixer
- Spout projection 9-7/8".
- 1/2" connections
- Drain not included - SeeDRAINS section
- Requires in wall rough valve 35287.
- Max flow rate 1.2 GPM
- ADA compliant

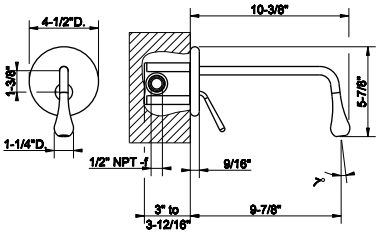

031	Chrome	1.609	125	Copper Br. GHRC	2.093
299	Matte Black	2.174	126	Black Metal Br. GHRC	2.093
147	Chrome Br.	2.174	713	Antique Brass	2.543
123	Copper GHRC	1.931	279	Matte White	2.174
124	Black Metal GHRC	1.931			

GOCCIA

48189+33029

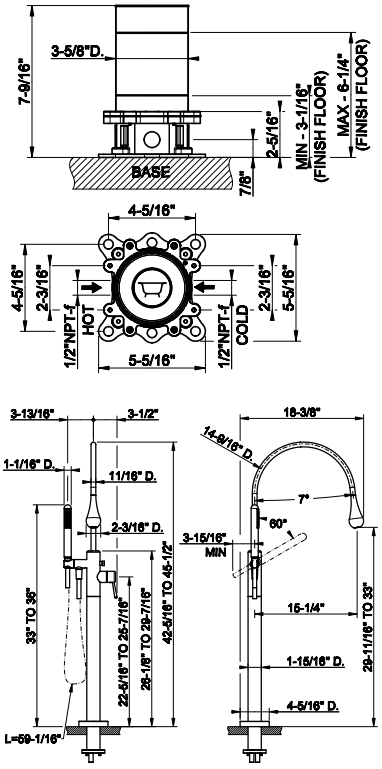

48189

Floor-mounted tub filler in-floor rough valve



031	Chrome	847

33029

External parts for freestanding external bath mixer
- Spout projection 15-1/4”
- 59-1/16” Flex hose
- Handshower max flow rate 1,75GPM
- Spout flow rate 5,4 GPM
- Requires in-wall rough valve 48189



031	Chrome	5.524	125	Copper Br. GHRC	7.734
299	Matte Black	7.457	126	Black Metal Br. GHRC	7.734
147	Chrome Br.	7.457	713	Antique Brass	8.728
123	Copper GHRC	7.181	279	Matte White	7.457
124	Black Metal GHRC	7.181			

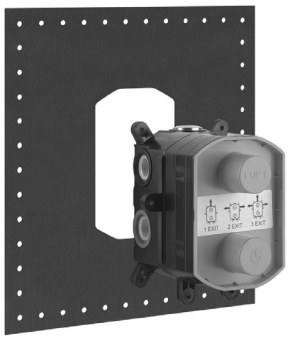

09279

In-wall thermostatic rough valve for 1/2/3-way diverter function
- 1/2” connections
- Vertical application
- Anti-scalding
- Non-Shared function

031	Chrome	877

09279+33842

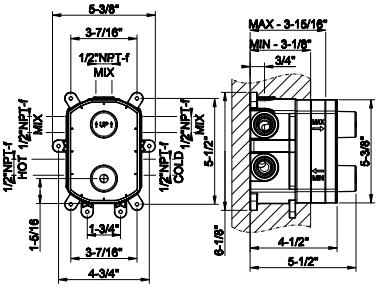



33842

TRIM PARTS ONLY External parts for thermostatic with single volume control
- Single backplate
- 1/2” connections
- Vertical application
- Anti-scalding
- Requires in-wall rough valve 09279

031	Chrome	1.316	125	Copper Br. GHRC	1.633
299	Matte Black	1.698	126	Black Metal Br. GHRC	1.633
147	Chrome Br.	1.698	713	Antique Brass	1.985
123	Copper GHRC	1.509	279	Matte White	1.698
124	Black Metal GHRC	1.509			

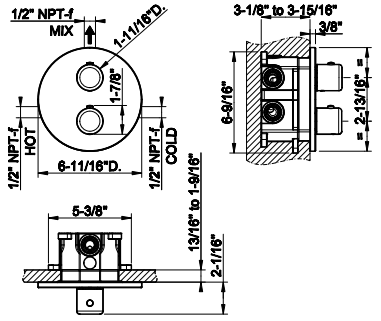

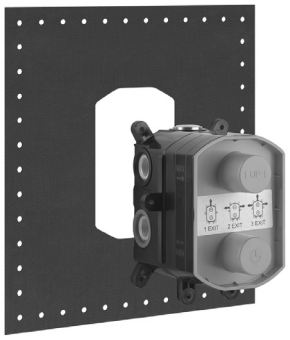

09279

In-wall thermostatic rough valve for 1/2/3-way diverter function
- 1/2” connections
- Vertical application
- Anti-scalding
- Non-Shared function

031	Chrome	877

09279+33844

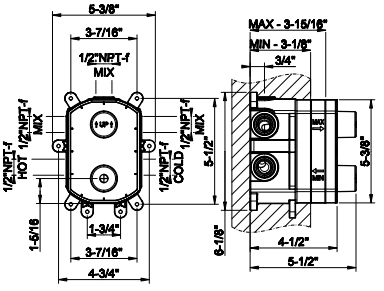



33844

TRIM PARTS ONLY External parts for 2-way diverter thermostatic and volume control
- Single backplate
- 1/2” connections
- Verticalapplication
- Anti-scalding
- Requires in-wall rough valve 09279

031	Chrome	1.316	125	Copper Br. GHRC	1.633
299	Matte Black	1.698	126	Black Metal Br. GHRC	1.633
147	Chrome Br.	1.698	713	Antique Brass	1.985
123	Copper GHRC	1.509	279	Matte White	1.698
124	Black Metal GHRC	1.509			

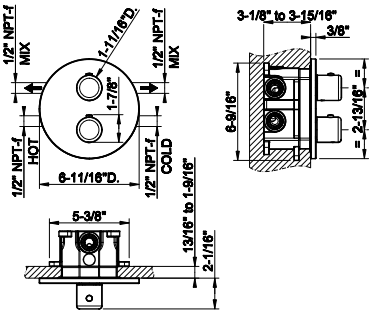

GOCCIA

09279+33846

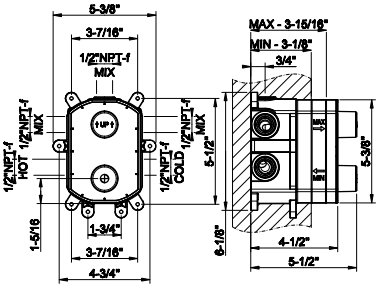

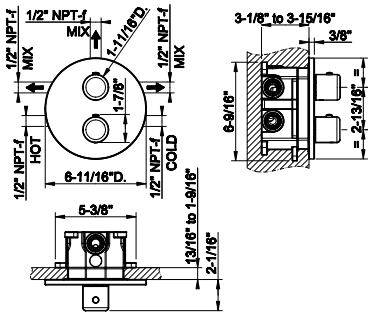

09279

In-wall thermostatic rough valve for 1/2/3-way diverter function
- 1/2” connections
- Vertical application
- Anti-scalding
- Non-Shared function

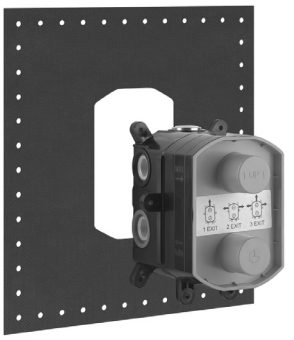

031	Chrome	877

33846

TRIM PARTS ONLY External parts for 3-way diverter thermostatic and volume control
- Single backplate
- 1/2” connections
- Verticalapplication
- Anti-scalding
- Requires in-wall rough valve 09279



031	Chrome	1.316	125	Copper Br. GHRC	1.633
299	Matte Black	1.698	126	Black Metal Br. GHRC	1.633
147	Chrome Br.	1.698	713	Antique Brass	1.985
123	Copper GHRC	1.509	279	Matte White	1.698
124	Black Metal GHRC	1.509			

39693+39752

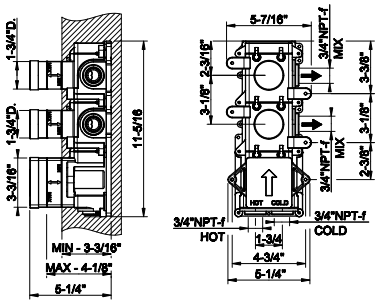

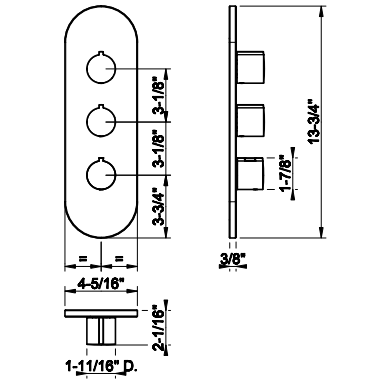

39693

In-wall thermostatic rough valve with 2 volume controls
- High capacity
- 3/4” connections
- Vertical/Horizontal application
- Anti-scalding

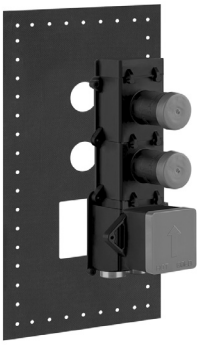

031	Chrome	1.903

39752

TRIM PARTS ONLY External parts for thermostatic with 2 volume controls
- Single backplate
- High Capacity
- 3/4” connections
- Vertical/horizontal application
- Anti-scalding
- Requires in-wall rough valve 39693



031	Chrome	2.197	708	Copper Br. PVD	3.471
149	Finox Br. Nickel	2.966	735	Warm Bronze PVD	3.252
299	Matte Black	2.966	726	Warm Bronze Br. PVD	3.471
720	Nickel PVD	3.252	710	Brass PVD	3.252
706	Black Metal PVD	3.252	727	Brass Br. PVD	3.471
707	Black Metal Br. PVD	3.471	187	Aged Bronze	3.471
030	Copper PVD	3.252	713	Antique Brass	3.471

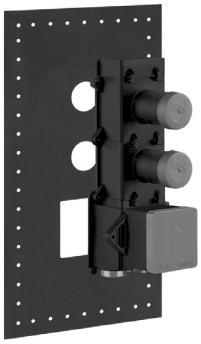

39693

In-wall thermostatic rough valve with 2 volume controls
- High capacity
- 3/4” connections
- Vertical/Horizontal application
- Anti-scalding

031	Chrome	1.903

39693+39644

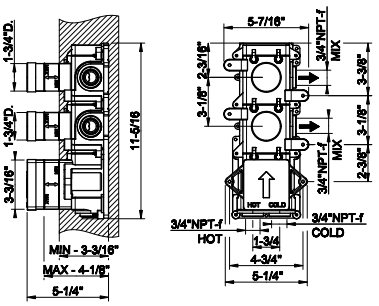



39644

TRIM PARTS ONLY External parts for thermostatic with 2 volume controls
- Separate backplate
- High Capacity
- 3/4” connections
- Vertical/horizontal application
- Anti-scalding
- Requires in-wall rough valve 39693

031	Chrome	2.149	708	Copper Br. PVD	4.178
149	Finox Br. Nickel	3.571	735	Warm Bronze PVD	3.915
299	Matte Black	3.571	726	Warm Bronze Br. PVD	4.178
720	Nickel PVD	3.915	710	Brass PVD	3.915
706	Black Metal PVD	3.915	727	Brass Br. PVD	4.178
707	Black Metal Br. PVD	4.178	187	Aged Bronze	4.178
030	Copper PVD	3.915	713	Antique Brass	4.178

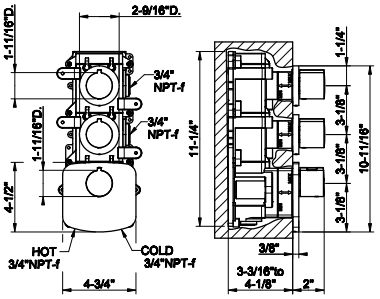

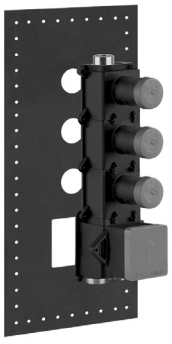

39695

In-wall thermostatic rough valve with 3 volume controls
- High capacity
- 3/4” connections
- Vertical/Horizontal application
- Anti-scalding

031	Chrome	2.197

39695+39754

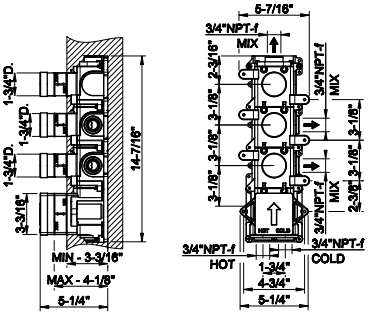



39754

TRIM PARTS ONLY External parts for thermostatic with 3 volume controls
- Single backplate
- High Capacity
- 3/4” connections
- Vertical/horizontal application
- Anti-scalding
- Requires in-wall rough valve 39695

031	Chrome	2.277	708	Copper Br. PVD	3.600
149	Finox Br. Nickel	3.076	735	Warm Bronze PVD	3.371
299	Matte Black	3.076	726	Warm Bronze Br. PVD	3.600
720	Nickel PVD	3.371	710	Brass PVD	3.371
706	Black Metal PVD	3.371	727	Brass Br. PVD	3.600
707	Black Metal Br. PVD	3.600	187	Aged Bronze	3.600
030	Copper PVD	3.371	713	Antique Brass	3.600

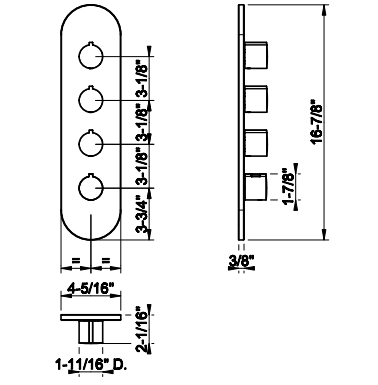

GOCCIA

39695+39646

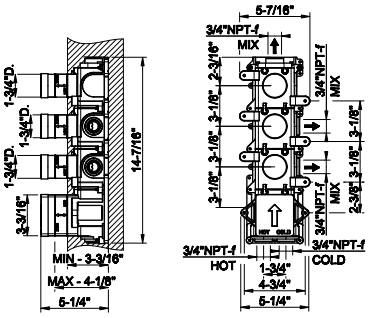

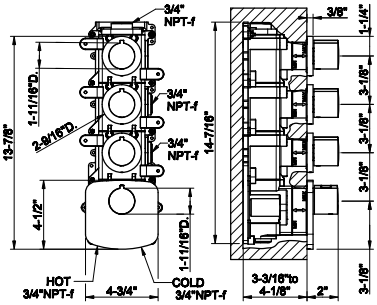

39695

In-wall thermostatic rough valve with 3 volume controls
- High capacity
- 3/4" connections
- Vertical/Horizontal application
- Anti-scalding

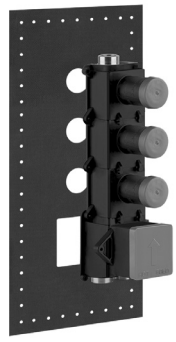

031	Chrome	2.197

39646

TRIM PARTS ONLY External parts for thermostatic with 3 volume controls
- Separate backplate
- High Capacity
- 3/4" connections
- Vertical/horizontal application
- Anti-scalding
- Requires in-wall rough valve 39695



031	Chrome	2.498	708	Copper Br. PVD	4.805
149	Finox Br. Nickel	4.107	735	Warm Bronze PVD	4.502
299	Matte Black	4.107	726	Warm Bronze Br. PVD	4.805
720	Nickel PVD	4.502	710	Brass PVD	4.502
706	Black Metal PVD	4.502	727	Brass Br. PVD	4.805
707	Black Metal Br. PVD	4.805	187	Aged Bronze	4.805
030	Copper PVD	4.502	713	Antique Brass	4.805

39699+39756

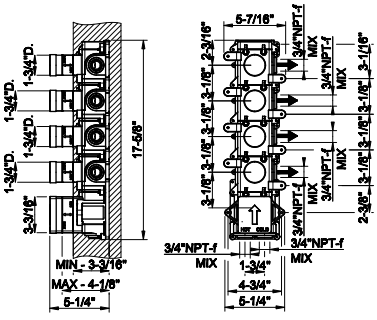

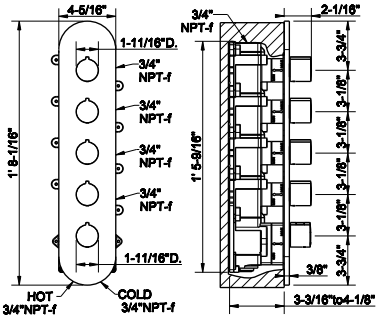

39699

In-wall thermostatic rough valve with 4 volume controls
- High capacity
- 3/4" connections
- Vertical/Horizontal application
- Anti-scalding
- Max flow rate 1.75 GPM

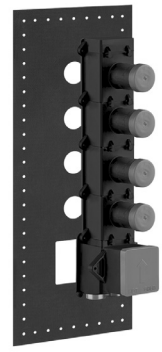

031	Chrome	2.498

39756

TRIM PARTS ONLY External parts for thermostatic with 4 volume controls
- Single backplate
- High Capacity
- 3/4" connections
- Vertical/horizontal application
- Anti-scalding
- Requires in-wall rough valve 39699



031	Chrome	2.637	708	Copper Br. PVD	4.168
149	Finox Br. Nickel	3.561	735	Warm Bronze PVD	3.904
299	Matte Black	3.561	726	Warm Bronze Br. PVD	4.168
720	Nickel PVD	3.904	710	Brass PVD	3.904
706	Black Metal PVD	3.904	727	Brass Br. PVD	4.168
707	Black Metal Br. PVD	4.168	187	Aged Bronze	4.168
030	Copper PVD	3.904	713	Antique Brass	4.168

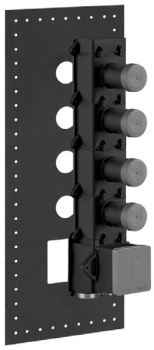

39699

In-wall thermostatic rough valve with 4 volume controls
- High capacity
- 3/4” connections
- Vertical/Horizontal application
- Anti-scalding
- Max flow rate 1.75 GPM

031	Chrome	2.498

39699+39650

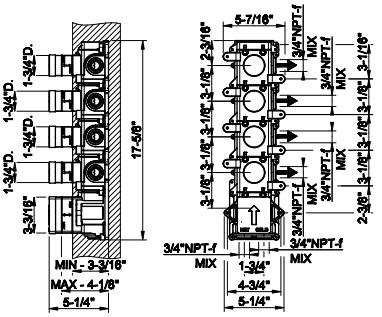



39650

TRIM PARTS ONLY External parts for thermostatic with 4 volume controls
- Separate backplate
- High Capacity
- 3/4” connections
- Vertical/horizontal application
- Anti-scalding
- Requires in-wall rough valve 39699

031	Chrome	2.829	708	Copper Br. PVD	5.745
149	Finox Br. Nickel	4.910	735	Warm Bronze PVD	5.381
299	Matte Black	4.910	726	Warm Bronze Br. PVD	5.745
720	Nickel PVD	5.381	710	Brass PVD	5.381
706	Black Metal PVD	5.381	727	Brass Br. PVD	5.745
707	Black Metal Br. PVD	5.745	187	Aged Bronze	5.745
030	Copper PVD	5.381	713	Antique Brass	5.745

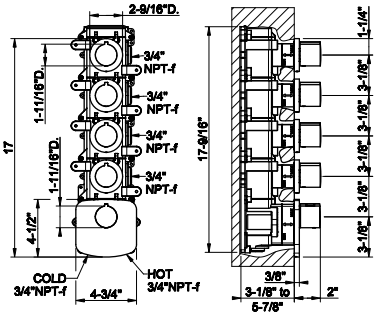

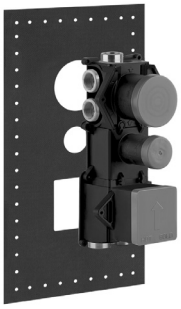

39601

In-wall thermostatic rough valve with 5-way diverter
- High capacity
- 3/4” connections
- Vertical/Horizontal application
- Anti-scalding
- Non shared function

031	Chrome	2.637

39601+39750

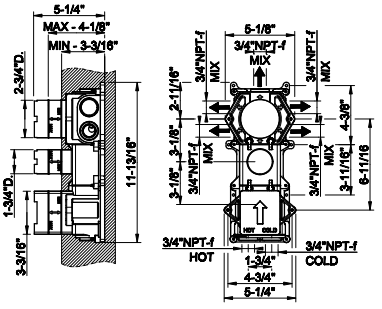



39750

TRIM PARTS ONLY External parts for 5-way thermostatic diverter with volume control
- Single backplate
- High Capacity
- 3/4” connections
- Vertical/horizontal application
- Anti-scalding
- Requires in-wall rough valve 39601

031	Chrome	2.204	708	Copper Br. PVD	3.483
149	Finox Br. Nickel	2.976	735	Warm Bronze PVD	3.262
299	Matte Black	2.976	726	Warm Bronze Br. PVD	3.483
720	Nickel PVD	3.262	710	Brass PVD	3.262
706	Black Metal PVD	3.262	727	Brass Br. PVD	3.483
707	Black Metal Br. PVD	3.483	187	Aged Bronze	3.483
030	Copper PVD	3.262	713	Antique Brass	3.483

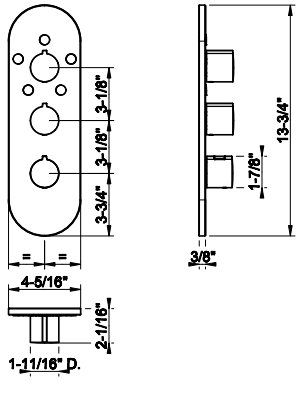

GOCCIA

39681+39666

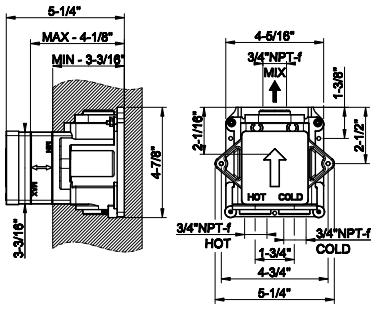

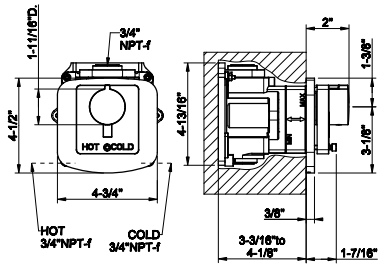

39681

In-wall thermostatic rough valve for individual mixer
- High capacity
- 3/4" connections
- Vertical/Horizontal application
- Anti-scalding

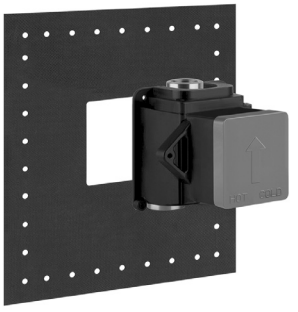

031	Chrome	1.169

39666

TRIM PARTS ONLY External parts for individual thermostatic mixer
- High Capacity
- 3/4" connections
- Vertical/horizontal application
- Anti-scalding
- Requires in-wall rough valve 39681



031	Chrome	954	708	Copper Br. PVD	1.932
149	Finox Br. Nickel	1.652	735	Warm Bronze PVD	1.811
299	Matte Black	1.652	726	Warm Bronze Br. PVD	1.932
720	Nickel PVD	1.811	710	Brass PVD	1.811
706	Black Metal PVD	1.811	727	Brass Br. PVD	1.932
707	Black Metal Br. PVD	1.932	187	Aged Bronze	1.932
030	Copper PVD	1.811	713	Antique Brass	1.932

39683+43268

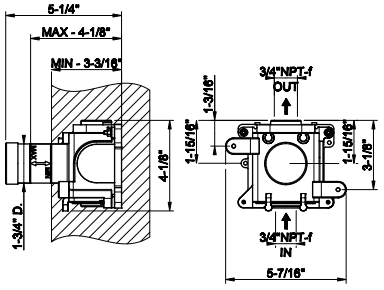

39683

In-wall thermostatic rough valve parts for volume control
- High capacity
- 3/4" connections
- Vertical/Horizontal application
- Anti-scalding

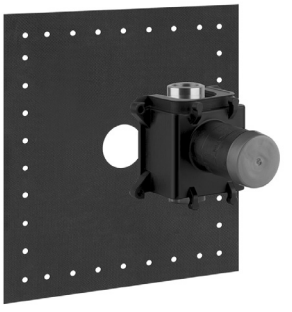

031	Chrome	582

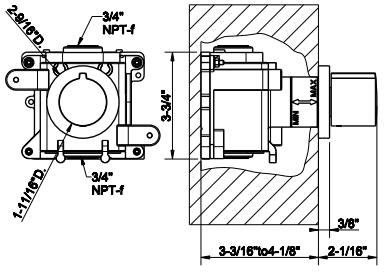

43268

TRIM PARTS ONLY External parts for individual thermostatic volume control
- Single backplate
- High Capacity
- 3/4" connections
- Vertical/horizontal application
- Anti-scalding
- Requires in-wall rough valve 39683



031	Chrome	580	708	Copper Br. PVD	1.231
149	Finox Br. Nickel	1.054	735	Warm Bronze PVD	1.154
299	Matte Black	1.054	726	Warm Bronze Br. PVD	1.231
720	Nickel PVD	1.154	710	Brass PVD	1.154
706	Black Metal PVD	1.154	727	Brass Br. PVD	1.231
707	Black Metal Br. PVD	1.231	187	Aged Bronze	1.231
030	Copper PVD	1.154	713	Antique Brass	1.231



35351

Ceiling-mounted shower head
- 1/2” connections
- Projection from ceiling 15-1/4”
- Max flow rate 1.75 GPM

031	Chrome	2.490	125	Copper Br. GHRC	3.237
299	Matte Black	3.363	126	Black Metal Br. GHRC	3.237
147	Chrome Br.	3.363	713	Antique Brass	3.936
123	Copper GHRC	2.988	279	Matte White	3.363
124	Black Metal GHRC	2.988			

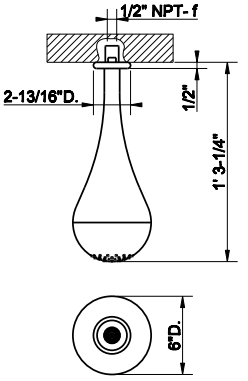



35353

Ceiling-mounted shower head
- 1/2” connections
- Custom length: Minimum 19” - Maximum 85-15/16”
- Max flow rate 1.75 GPM

031	Chrome	3.672	125	Copper Br. GHRC	4.775
299	Matte Black	4.958	126	Black Metal Br. GHRC	4.775
147	Chrome Br.	4.958	713	Antique Brass	5.803
123	Copper GHRC	4.407	279	Matte White	4.958
124	Black Metal GHRC	4.407			

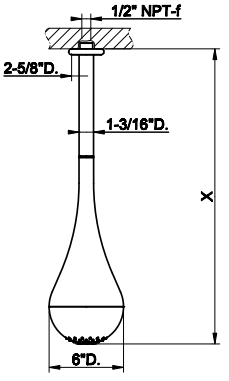



33755

Wall-mounted shower head
- 1/2” connections
- Projection from wall to center 15-3/4”
- Total projection 20”
- Max flow rate 1.75GPM

031	Chrome	1.714	125	Copper Br. GHRC	2.228
299	Matte Black	2.314	126	Black Metal Br. GHRC	2.228
147	Chrome Br.	2.314	713	Antique Brass	2.708
123	Copper GHRC	2.058	279	Matte White	2.314
124	Black Metal GHRC	2.058			

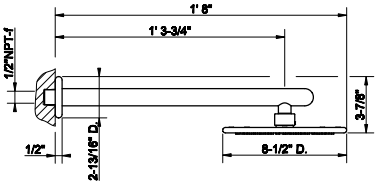



35342

Handshower sliding rail set
- Adjustable hook
- 59” flex hose
- Wall elbow
- Max flow rate 1.75 GPM

031	Chrome	1.782	125	Copper Br. GHRC	2.317
299	Matte Black	2.405	126	Black Metal Br. GHRC	2.317
147	Chrome Br.	2.405	713	Antique Brass	2.816
123	Copper GHRC	2.138	279	Matte White	2.405
124	Black Metal GHRC	2.138			

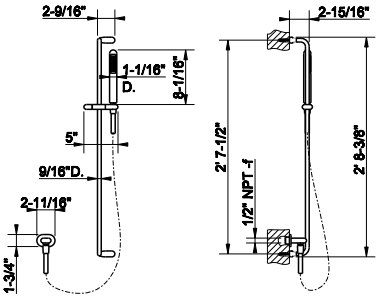

GOCCIA

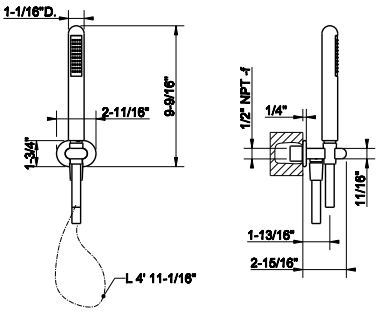

35373

Handshower set
- Fixed hook
- Wall elbow
- 59” flex hose
- Max flow rate 1.75 GPM

031	Chrome	919	125	Copper Br. GHRC	1.195
299	Matte Black	1.242	126	Black Metal Br. GHRC	1.195
147	Chrome Br.	1.242	713	Antique Brass	1.455
123	Copper GHRC	1.103	279	Matte White	1.242
124	Black Metal GHRC	1.103			



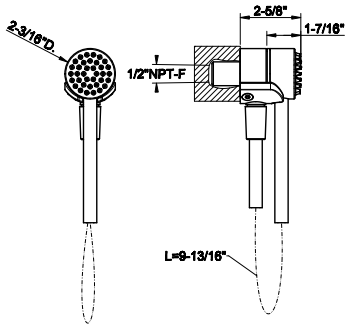

63099

Magnetic anti-limestone handshower set
- Fixed hook
- Wall elbow
- 59” Cromalux flex hose
- Max flow rate 1.75 GPM

031	Chrome	1.213	726	Warm Bronze Br. PVD	1.916
149	Finox Br. Nickel	1.638	710	Brass PVD	1.794
299	Matte Black	1.638	727	Brass Br. PVD	1.916
720	Nickel PVD	1.794	246	Gold PVD	2.037
706	Black Metal PVD	1.794	716	Gold Br. PVD	2.037
707	Black Metal Br. PVD	1.916	187	Aged Bronze	1.916
030	Copper PVD	1.794	713	Antique Brass	1.916
708	Copper Br. PVD	1.916	845	Dark Bronze	1.916
735	Warm Bronze PVD	1.794			



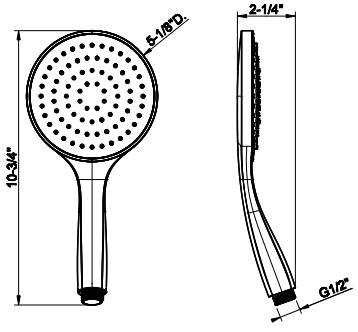

14370

Antilimestone handshower
- Single spray
- Max flow rate 1.75 GPM

031	Chrome	189	726	Warm Bronze Br. PVD	465
149	Finox Br. Nickel	377	710	Brass PVD	435
299	Matte Black	377	727	Brass Br. PVD	465
147	Chrome Br.	377	246	Gold PVD	493
720	Nickel PVD	435	716	Gold Br. PVD	493
706	Black Metal PVD	435	187	Aged Bronze	465
707	Black Metal Br. PVD	465	713	Antique Brass	465
030	Copper PVD	435	845	Dark Bronze	465
708	Copper Br. PVD	465	279	Matte White	377
735	Warm Bronze PVD	435			



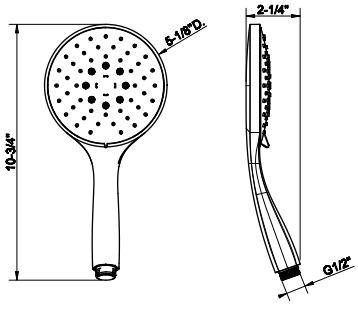

14376

Handshower with white insert
- 3-pattern spray
- Max flow rate 1.75 GPM

031	Chrome	390	726	Warm Bronze Br. PVD	656
149	Finox Br. Nickel	527	710	Brass PVD	616
299	Matte Black	527	727	Brass Br. PVD	656
147	Chrome Br.	527	246	Gold PVD	681
720	Nickel PVD	616	716	Gold Br. PVD	681
706	Black Metal PVD	616	187	Aged Bronze	656
707	Black Metal Br. PVD	656	713	Antique Brass	656
030	Copper PVD	616	845	Dark Bronze	656
708	Copper Br. PVD	656	279	Matte White	527
735	Warm Bronze PVD	616			





01637

59” flex hose

031	Chrome	134	726	Warm Bronze Br. PVD	214
149	Finox Br. Nickel	173	710	Brass PVD	203
299	Matte Black	173	727	Brass Br. PVD	214
147	Chrome Br.	173	246	Gold PVD	227
720	Nickel PVD	203	716	Gold Br. PVD	227
706	Black Metal PVD	203	187	Aged Bronze	214
707	Black Metal Br. PVD	214	713	Antique Brass	214
030	Copper PVD	203	845	Dark Bronze	214
708	Copper Br. PVD	214	279	Matte White	173
735	Warm Bronze PVD	203			

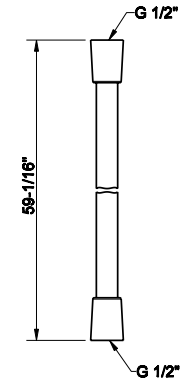



01724

Metal flexible hose, 59” length, 1/2” connector.

031	Chrome	196	726	Warm Bronze Br. PVD	308
149	Finox Br. Nickel	260	710	Brass PVD	288
299	Matte Black	260	727	Brass Br. PVD	308
147	Chrome Br.	260	246	Gold PVD	288
720	Nickel PVD	308	716	Gold Br. PVD	341
706	Black Metal PVD	288	187	Aged Bronze	308
707	Black Metal Br. PVD	308	713	Antique Brass	308
030	Copper PVD	288	845	Dark Bronze	308
708	Copper Br. PVD	308	279	Matte White	259
735	Warm Bronze PVD	288			

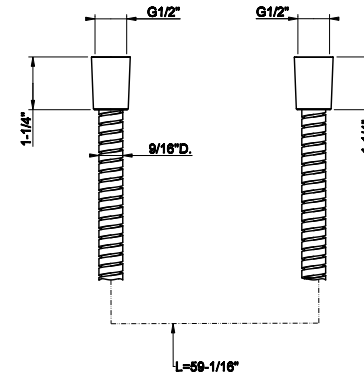



goccia
ACCESSORIES

38001

Wall-mounted soap dish, white



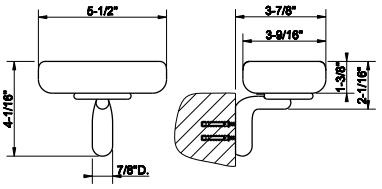

031	Chrome	480	125	Copper Br. GHRC	625
299	Matte Black	649	126	Black Metal Br. GHRC	625
147	Chrome Br.	649	713	Antique Brass	758
123	Copper GHRC	578	279	Matte White	649
124	Black Metal GHRC	578			

38002

Wall-mounted soap dish, black



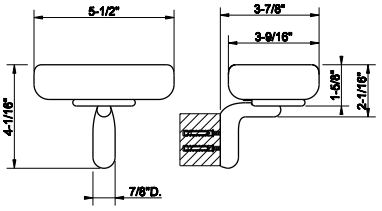

031	Chrome	480	125	Copper Br. GHRC	625
299	Matte Black	649	126	Black Metal Br. GHRC	625
147	Chrome Br.	649	713	Antique Brass	758
123	Copper GHRC	578	279	Matte White	649
124	Black Metal GHRC	578			

38007

Wall-mounted holder, white



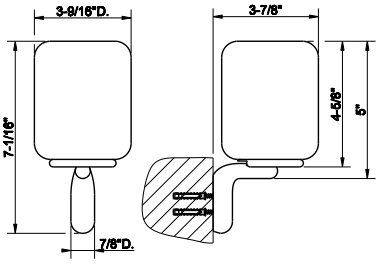

031	Chrome	488	125	Copper Br. GHRC	634
299	Matte Black	658	126	Black Metal Br. GHRC	634
147	Chrome Br.	658	713	Antique Brass	770
123	Copper GHRC	585	279	Matte White	658
124	Black Metal GHRC	585			

38008

Wall-mounted holder, black



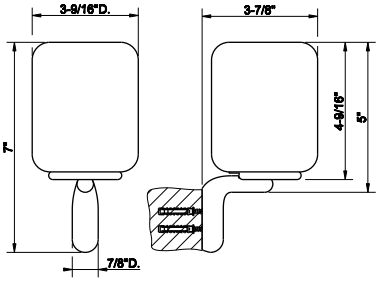

031	Chrome	488	125	Copper Br. GHRC	634
299	Matte Black	658	126	Black Metal Br. GHRC	634
147	Chrome Br.	658	713	Antique Brass	770
123	Copper GHRC	585	279	Matte White	658
124	Black Metal GHRC	585			

GOCCIA ACCESSORIES

38013

Wall-mounted liquid soap dispenser , white

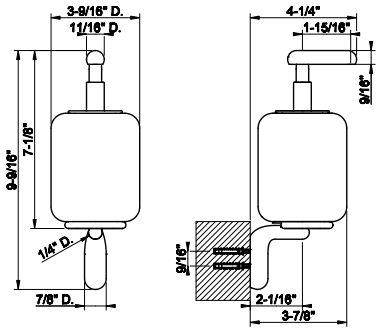



031	Chrome	773	125	Copper Br. GHRC	1.006
299	Matte Black	1.045	126	Black Metal Br. GHRC	1.006
147	Chrome Br.	1.045	713	Antique Brass	1.222
123	Copper GHRC	929	279	Matte White	1.045
124	Black Metal GHRC	929			

38014

Wall-mounted liquid soap dispenser - black

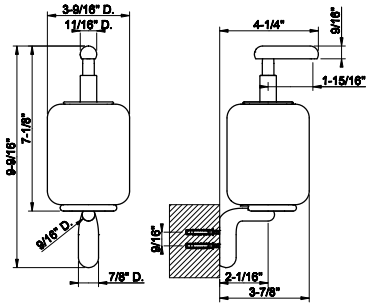



031	Chrome	773	125	Copper Br. GHRC	1.006
299	Matte Black	1.045	126	Black Metal Br. GHRC	1.006
147	Chrome Br.	1.045	713	Antique Brass	1.223
123	Copper GHRC	929	279	Matte White	1.045
124	Black Metal GHRC	929			

38019

Wall-mounted brush holder, white

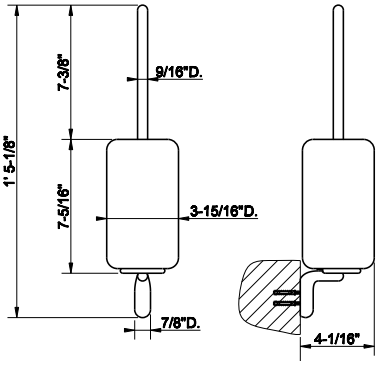



031	Chrome	736	125	Copper Br. GHRC	957
299	Matte Black	995	126	Black Metal Br. GHRC	957
147	Chrome Br.	995	713	Antique Brass	1.164
123	Copper GHRC	885	279	Matte White	995
124	Black Metal GHRC	885			

38020

Wall-mounted brush holder, black

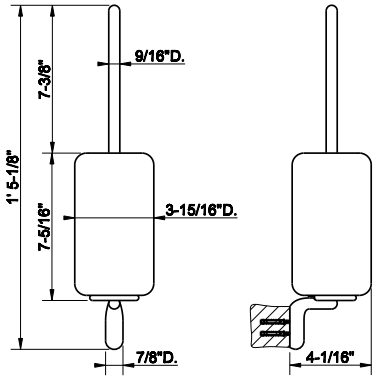



031	Chrome	736	125	Copper Br. GHRC	957
299	Matte Black	995	126	Black Metal Br. GHRC	957
147	Chrome Br.	995	713	Antique Brass	1.164
123	Copper GHRC	885	279	Matte White	995
124	Black Metal GHRC	885			

38025

Standing soap holder, white



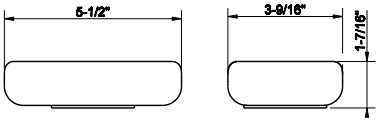

531	Matt White Ceramic	222

38026

Standing soap holder, black



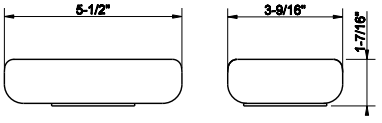

532	Matt Black Ceramic	222

38034

Standing tumbler holder, white



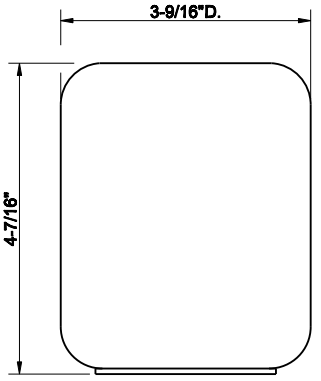

531	Matt White Ceramic	260

38035

Standing tumbler holder, black



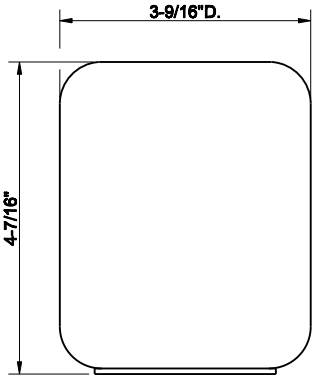

532	Matt Black Ceramic	260

GOCCIA ACCESSORIES

38037

Standing soap dispenser holder, white

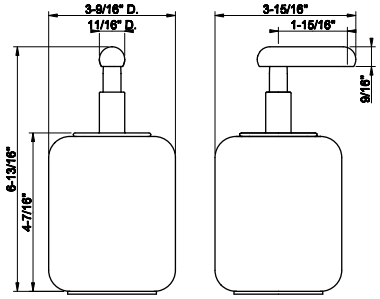



031	Chrome	552	125	Copper Br. GHRC	719
299	Matte Black	746	126	Black Metal Br. GHRC	719
147	Chrome Br.	746	713	Antique Brass	873
123	Copper GHRC	663	279	Matte White	746
124	Black Metal GHRC	663			

38038

Standing soap dispenser holder, black

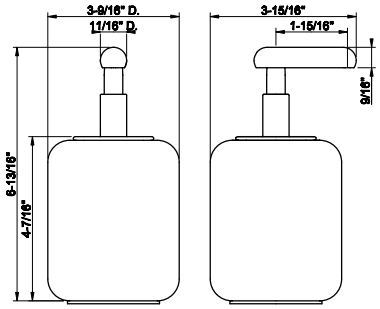



031	Chrome	552	125	Copper Br. GHRC	719
299	Matte Black	746	126	Black Metal Br. GHRC	719
147	Chrome Br.	746	713	Antique Brass	873
123	Copper GHRC	663	279	Matte White	746
124	Black Metal GHRC	663			

38043

White GRES standing brush holder

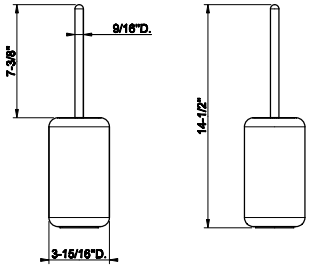



031	Chrome	478	125	Copper Br. GHRC	668
299	Matte Black	645	126	Black Metal Br. GHRC	668
147	Chrome Br.	645	713	Antique Brass	753
123	Copper GHRC	620	279	Matte White	645
124	Black Metal GHRC	620			

38044

Black GRES standing brush holder

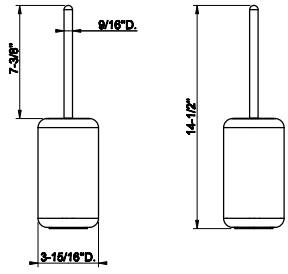



031	Chrome	478	125	Copper Br. GHRC	668
299	Matte Black	645	126	Black Metal Br. GHRC	668
147	Chrome Br.	645	713	Antique Brass	753
123	Copper GHRC	620	279	Matte White	645
124	Black Metal GHRC	620			

38049

Wall-mounted tissue holder with cover



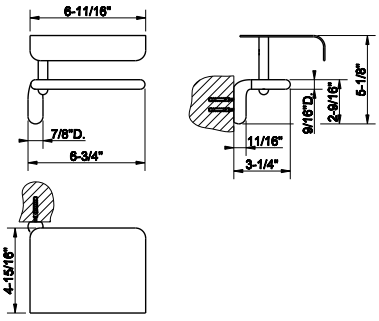

031	Chrome	884	125	Copper Br. GHRC	1.148
299	Matte Black	1.192	126	Black Metal Br. GHRC	1.148
147	Chrome Br.	1.192	713	Antique Brass	1.394
123	Copper GHRC	1.061	279	Matte White	1.192
124	Black Metal GHRC	1.061			

38055

Wall-mounted tissue holder
• Vertical or horizontal application



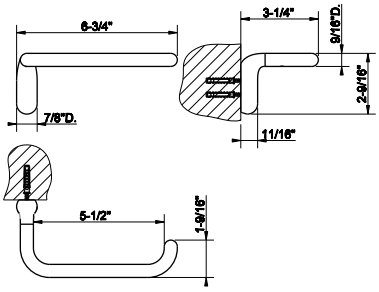

031	Chrome	406	125	Copper Br. GHRC	528
299	Matte Black	549	126	Black Metal Br. GHRC	528
147	Chrome Br.	549	713	Antique Brass	642
123	Copper GHRC	488	279	Matte White	549
124	Black Metal GHRC	488			

38067

White GRES Standing set with paper roll holder and brush holder



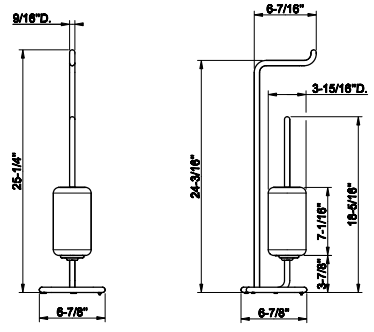

031	Chrome	1.433	125	Copper Br. GHRC	2.005
299	Matte Black	1.933	126	Black Metal Br. GHRC	2.005
147	Chrome Br.	1.933	713	Antique Brass	2.265
123	Copper GHRC	1.863	279	Matte White	1.933
124	Black Metal GHRC	1.863			

38068

Black GRES Standing set with paper roll holder and brush holder



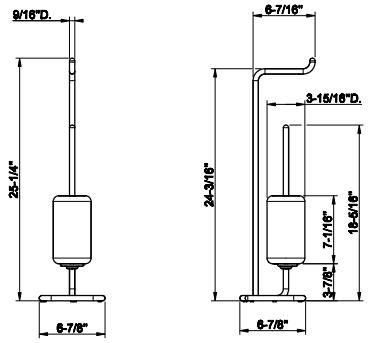

031	Chrome	1.433	125	Copper Br. GHRC	2.005
299	Matte Black	1.933	126	Black Metal Br. GHRC	2.005
147	Chrome Br.	1.933	713	Antique Brass	2.265
123	Copper GHRC	1.863	279	Matte White	1.933
124	Black Metal GHRC	1.863			

GOCCIA ACCESSORIES

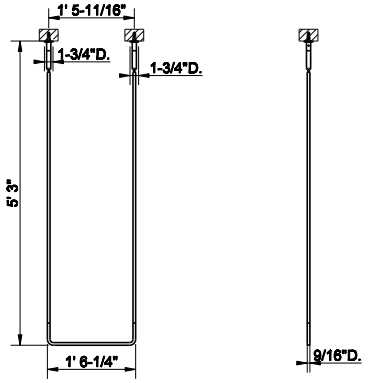

38144

Ceiling mounted towel bar, 18"-1/4" wide X 63" long
• Mounting bracket 29724 has to be ordered with this item.

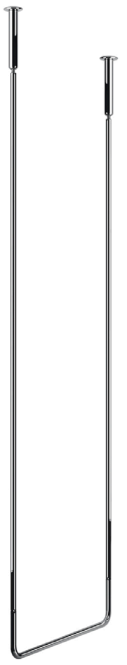

031	Chrome	1.912	125	Copper Br. GHRC	2.484
299	Matte Black	2.580	126	Black Metal Br. GHRC	2.484
147	Chrome Br.	2.580	713	Antique Brass	3.019
123	Copper GHRC	2.294	279	Matte White	2.580
124	Black Metal GHRC	2.294			

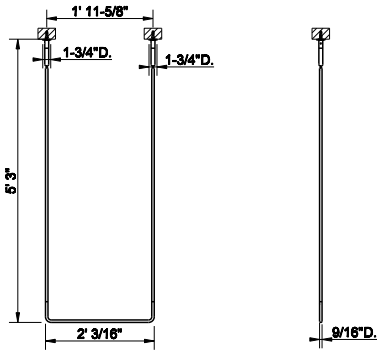

38143

Ceiling mounted towel bar, 24' 3/16" wide X 63" long
• Mounting bracket 29724 has to be ordered with this item.

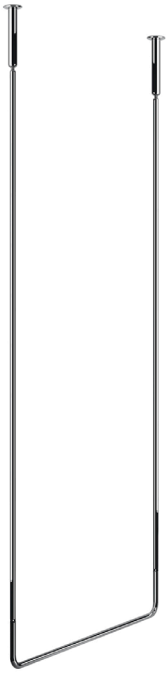

031	Chrome	1.912	125	Copper Br. GHRC	2.484
299	Matte Black	2.580	126	Black Metal Br. GHRC	2.484
147	Chrome Br.	2.580	713	Antique Brass	3.019
123	Copper GHRC	2.294	279	Matte White	2.580
124	Black Metal GHRC	2.294			

38097

12” towel bar



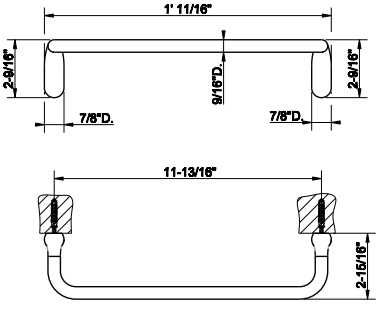

031	Chrome	480	125	Copper Br. GHRC	625
299	Matte Black	649	126	Black Metal Br. GHRC	625
147	Chrome Br.	649	713	Antique Brass	758
123	Copper GHRC	578	279	Matte White	649
124	Black Metal GHRC	578			

38100

18” towel bar



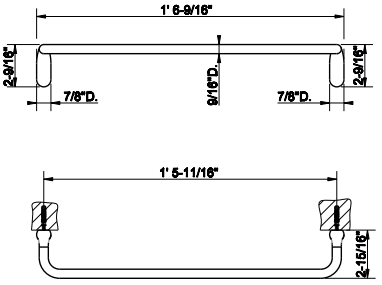

031	Chrome	517	125	Copper Br. GHRC	673
299	Matte Black	699	126	Black Metal Br. GHRC	673
147	Chrome Br.	699	713	Antique Brass	817
123	Copper GHRC	620	279	Matte White	699
124	Black Metal GHRC	620			

38103

24” towel bar



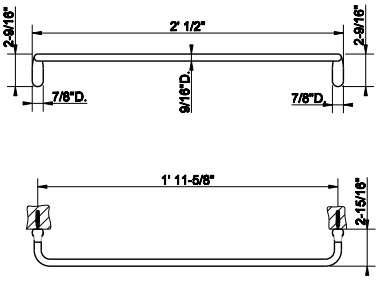

031	Chrome	589	125	Copper Br. GHRC	766
299	Matte Black	795	126	Black Metal Br. GHRC	766
147	Chrome Br.	795	713	Antique Brass	930
123	Copper GHRC	707	279	Matte White	795
124	Black Metal GHRC	707			

38109

Towel ring



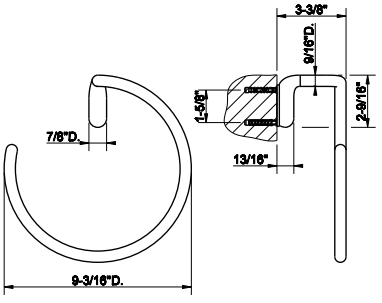

031	Chrome	458	125	Copper Br. GHRC	595
299	Matte Black	619	126	Black Metal Br. GHRC	595
147	Chrome Br.	619	713	Antique Brass	724
123	Copper GHRC	550	279	Matte White	619
124	Black Metal GHRC	550			

GOCCIA ACCESSORIES

38121

Garment hook

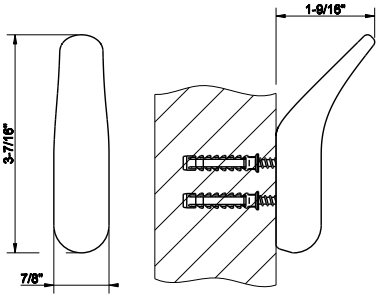



031	Chrome	201	125	Copper Br. GHRC	262
299	Matte Black	272	126	Black Metal Br. GHRC	262
147	Chrome Br.	272	713	Antique Brass	317
123	Copper GHRC	241	279	Matte White	272
124	Black Metal GHRC	241			

38177

White GRES waste-paper basket

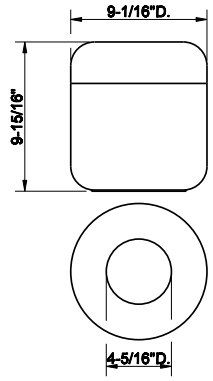



531	Matt White Ceramic	780

38178

Black GRES waste-paper basket

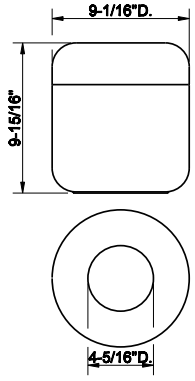



532	Matt Black Ceramic	780

38181

Stool, white Gres

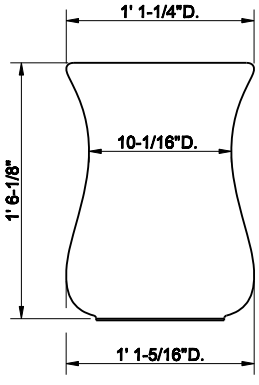



531	Matt White Ceramic	2.054



38182

Stool, black Gres

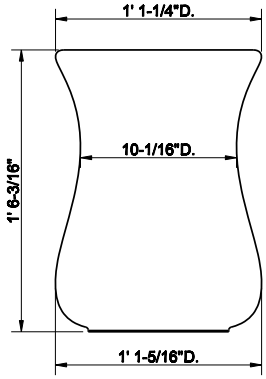

532	Matt Black Ceramic	2.054

58424

Safety grip-handle for bathtub and shower enclosure
• 18" length



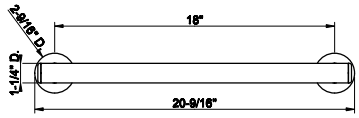

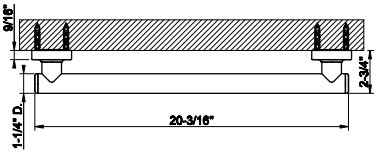

031	Chrome	1.932	726	Warm Bronze Br. PVD	3.054
149	Finox Br. Nickel	2.611	710	Brass PVD	2.862
299	Matte Black	2.611	727	Brass Br. PVD	3.056
720	Nickel PVD	2.862	246	Gold PVD	3.243
706	Black Metal PVD	2.862	716	Gold Br. PVD	3.243
707	Black Metal Br. PVD	3.056	187	Aged Bronze	3.056
030	Copper PVD	2.862	713	Antique Brass	3.056
708	Copper Br. PVD	3.056	845	Dark Bronze	3.056
735	Warm Bronze PVD	2.862	279	Matte White	2.611



goccia
TOTAL LOOK

54611



Flush Actuator Plate
•Stainless steel
•Compatible with GEBERIT models: 111.597.001, 111.902.005, 111.798.00.1, 111.335.00.5
•Without visible fixing system

031	Chrome	1.228	708	Copper Br. PVD	1.813
239	Steel Br.	1.228	735	Warm Bronze PVD	1.813
275	Matte Cipria	1.653	726	Warm Bronze Br. PVD	1.813
273	Matte Greige	1.653	710	Brass PVD	1.813
280	Matte Ocra	1.653	727	Brass Br. PVD	1.813
281	Matte Coral	1.653	246	Gold PVD	2.058
276	Matte Agave	1.653	716	Gold Br. PVD	2.058
299	Matte Black	1.653	187	Aged Bronze	1.813
720	Nickel PVD	1.813	713	Antique Brass	1.813
706	Black Metal PVD	1.813	845	Dark Bronze	1.813
707	Black Metal Br. PVD	1.813	279	Matte White	1.653
030	Copper PVD	1.813			

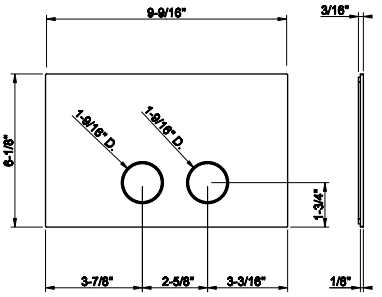

39123



Counter washbasin in White Gres without overflow waste
• 7-5/16" HIGH X 15-3/4" DIAMETER
• Drain sold separately - see 29048
•Please contact Gessi North America for freight terms

519	Gres	1.071

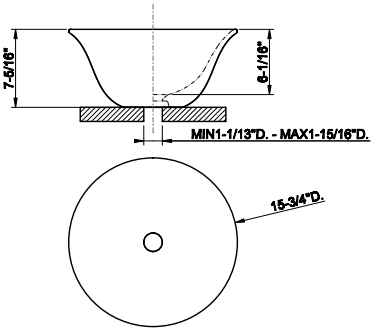

39124



Counter washbasin in White Gres without overflow waste
• 7-5/16" HIGH X 15-3/4" DIAMETER
• Drain sold separately - see 29048
•Please contact Gessi North America for freight terms

519	Gres	1.071

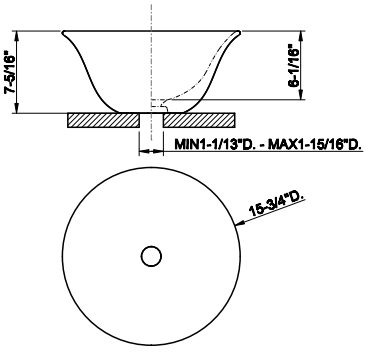

39125



Counter washbasin in White Gres without overflow waste
• 7-5/16" HIGH X 15-3/4" DIAMETER
• Drain sold separately - see 29048
•Please contact Gessi North America for freight terms

519	Gres	2.271

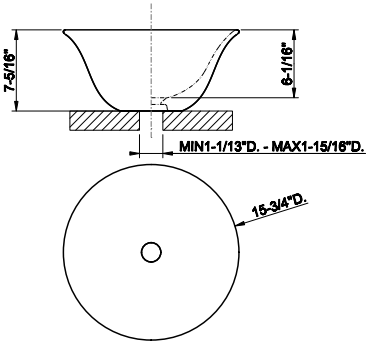

GOCCIA TOTAL LOOK

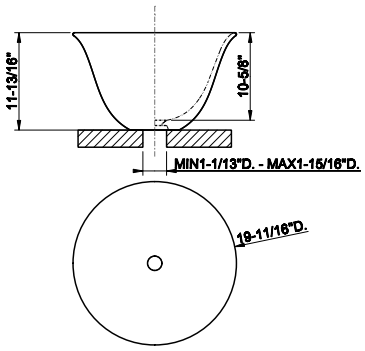

39133

Counter washbasin in White Gres without overflow waste
- 11-13/16" HIGH X 19-11/16" DIAMETER
- Drain sold separately - see 29048
- Please contact Gessi North America for freight terms

519 Gres 1.162

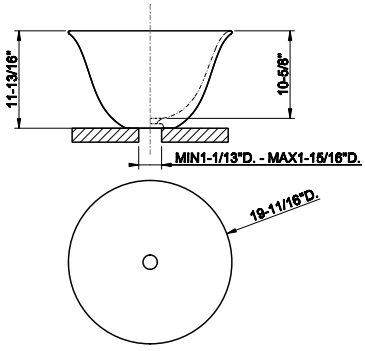

39134

Counter washbasin in White Gres without overflow waste
- 11-13/16" HIGH X 19-11/16" DIAMETER
- Drain sold separately - see 29048
- Please contact Gessi North America for freight terms



519 Gres 1.162

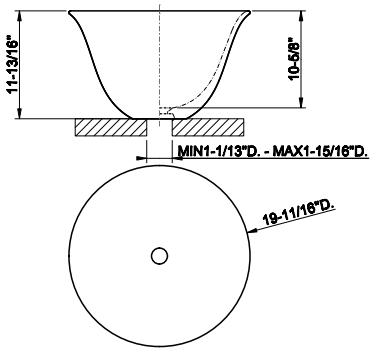

39135

Counter washbasin in White Gres without overflow waste
- 11-13/16" HIGH X 19-11/16" DIAMETER
- Drain sold separately - see 29048
- Please contact Gessi North America for freight terms



519 Gres 2.542



01315

1 1/4” pish drain with or without overflow waste

031	Chrome	345	735	Warm Bronze PVD	546
149	Finox Br. Nickel	466	726	Warm Bronze Br. PVD	580
299	Matte Black	466	710	Brass PVD	546
147	Chrome Br.	466	727	Brass Br. PVD	580
720	Nickel PVD	546	246	Gold PVD	615
706	Black Metal PVD	546	716	Gold Br. PVD	615
707	Black Metal Br. PVD	580	187	Aged Bronze	580
030	Copper PVD	546	713	Antique Brass	580
708	Copper Br. PVD	580	279	Matte White	466

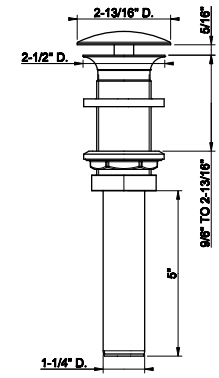

GESSI



RILIEVO

59001



Single lever washbasin mixer with pop-up assembly
• Spout projection 4-15/16”
• Height 6”
• 1-1/4” D. pop-up drain and flexible hoses with 9/16” – 24 UNEF connections.
• Max flow rate 1.2 GPM
• ADA compliant
• When ordered in #279 drain will be in #031

031	Chrome	857	708	Copper Br. PVD	1.353
149	Finox Br. Nickel	1.156	735	Warm Bronze PVD	1.269
299	Matte Black	1.156	726	Warm Bronze Br. PVD	1.353
720	Nickel PVD	1.269	710	Brass PVD	1.269
706	Black Metal PVD	1.269	727	Brass Br. PVD	1.353
707	Black Metal Br. PVD	1.353	279	Matte White	1.156
030	Copper PVD	1.269			

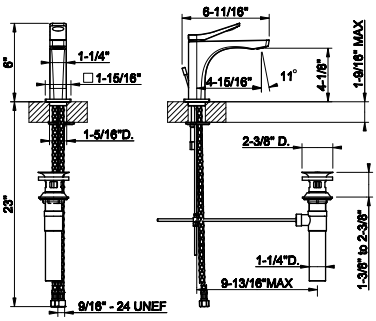

59002



Single lever washbasin mixer without pop-up assembly
• Spout projection 4-15/16”
• Height 6”
• Drain not included – see DRAINS section
• Max flow rate 1.2 GPM
• ADA Compliant

031	Chrome	817	708	Copper Br. PVD	1.288
149	Finox Br. Nickel	1.102	735	Warm Bronze PVD	1.208
299	Matte Black	1.102	726	Warm Bronze Br. PVD	1.288
720	Nickel PVD	1.208	710	Brass PVD	1.208
706	Black Metal PVD	1.208	727	Brass Br. PVD	1.288
707	Black Metal Br. PVD	1.288	279	Matte White	1.102
030	Copper PVD	1.208			

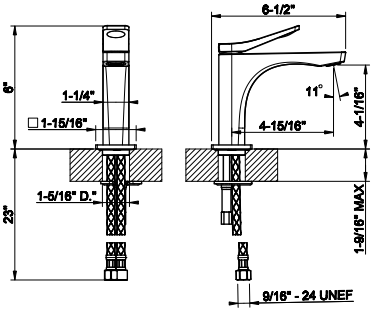

59005



Single lever washbasin mixer with pop-up assembly
• Spout projection 5-1/8”
• Height 6-1/8”
• 1-1/4” D. pop-up drain and flexiblehoses with 9/16” – 24 UNEF connections.
• Max flow rate 1.2 GPM
• ADA compliant
• When ordered in #279 drain will be in #031

031	Chrome	939	708	Copper Br. PVD	1.484
149	Finox Br. Nickel	1.269	735	Warm Bronze PVD	1.390
299	Matte Black	1.269	726	Warm Bronze Br. PVD	1.484
720	Nickel PVD	1.390	710	Brass PVD	1.390
706	Black Metal PVD	1.390	727	Brass Br. PVD	1.484
707	Black Metal Br. PVD	1.484	279	Matte White	1.269
030	Copper PVD	1.390			

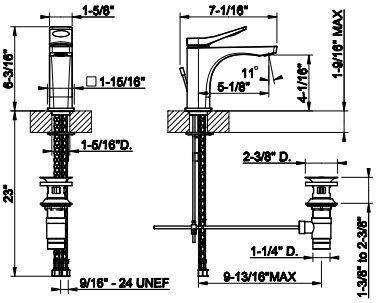

59006



Single lever washbasin mixer without pop-up assembly
• Spout projection 5-1/8”
• Height 6-1/8”
• Drain not included - See DRAINSsection
• Max flow rate 1.2 GPM
• ADA compliant

031	Chrome	900	708	Copper Br. PVD	1.420
149	Finox Br. Nickel	1.213	735	Warm Bronze PVD	1.330
299	Matte Black	1.213	726	Warm Bronze Br. PVD	1.420
720	Nickel PVD	1.330	710	Brass PVD	1.330
706	Black Metal PVD	1.330	727	Brass Br. PVD	1.420
707	Black Metal Br. PVD	1.420	279	Matte White	1.213
030	Copper PVD	1.330			

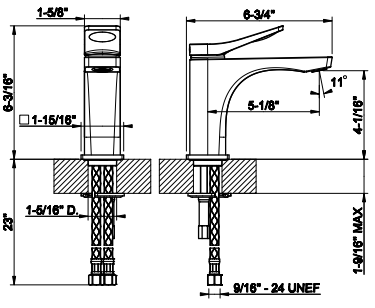

RILIEVO

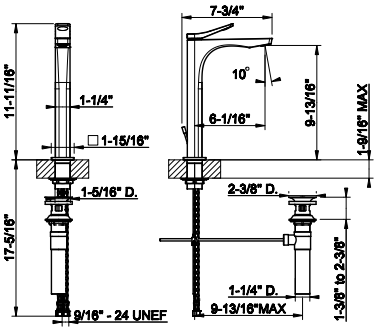

59003

Tall single lever washbasin mixer with pop-up assembly
- Spout projection 6-1/16”
- 1-1/4” D. pop-up drain and flexible hoses with 9/16” – 24 UNEF
- Height 11-11/16”
- Max flow rate 1.2 GPM
- ADA compliant
- When ordered in #279 drain will be in #031

031	Chrome	1.230	708	Copper Br. PVD	1.942
149	Finox Br. Nickel	1.660	735	Warm Bronze PVD	1.820
299	Matte Black	1.660	726	Warm Bronze Br. PVD	1.942
720	Nickel PVD	1.820	710	Brass PVD	1.820
706	Black Metal PVD	1.820	727	Brass Br. PVD	1.942
707	Black Metal Br. PVD	1.942	279	Matte White	1.660
030	Copper PVD	1.820			



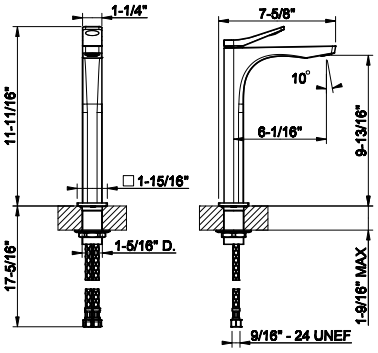

59004

Tall single lever washbasin mixer without pop-up assembly
- Spout projection 6-1/16”
- Height 11-11/16”
- Drain not included - SeeDRAINS section
- Max flow rate 1.2 GPM
- ADA compliant

031	Chrome	1.190	708	Copper Br. PVD	1.878
149	Finox Br. Nickel	1.606	735	Warm Bronze PVD	1.761
299	Matte Black	1.606	726	Warm Bronze Br. PVD	1.878
720	Nickel PVD	1.761	710	Brass PVD	1.761
706	Black Metal PVD	1.761	727	Brass Br. PVD	1.878
707	Black Metal Br. PVD	1.878	279	Matte White	1.606
030	Copper PVD	1.761			



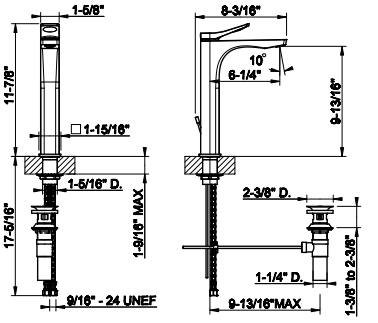

59009

Tall single lever washbasin mixer with pop-up assembly
- Spout projection 6-1/4”
- Height 11-13/16”
- 1-1/4” D. pop-up drain andflexible hoses with 9/16” – 24 UNEF connections
- Max flow rate 1.2 GPM
- ADA compliant
- When ordered in #279 drain will be in #031

031	Chrome	1.274	708	Copper Br. PVD	2.011
149	Finox Br. Nickel	1.719	735	Warm Bronze PVD	1.884
299	Matte Black	1.719	726	Warm Bronze Br. PVD	2.011
720	Nickel PVD	1.884	710	Brass PVD	1.884
706	Black Metal PVD	1.884	727	Brass Br. PVD	2.011
707	Black Metal Br. PVD	2.011	279	Matte White	1.719
030	Copper PVD	1.884			



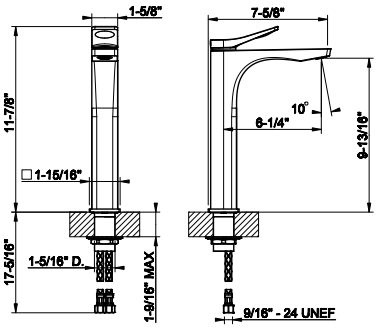

59010

Tall single lever washbasin mixer without pop-up assembly
- Spout projection 6-1/4”
- Height 11-13/16”
- Drain not included - SeeDRAINS section
- Max flow rate 1.2 GPM
- ADA compliant

031	Chrome	1.232	708	Copper Br. PVD	1.945
149	Finox Br. Nickel	1.663	735	Warm Bronze PVD	1.823
299	Matte Black	1.663	726	Warm Bronze Br. PVD	1.945
720	Nickel PVD	1.823	710	Brass PVD	1.823
706	Black Metal PVD	1.823	727	Brass Br. PVD	1.945
707	Black Metal Br. PVD	1.945	279	Matte White	1.663
030	Copper PVD	1.823			



59011



Widespread washbasin mixer with pop-up assembly
- Spout projection 6-1/16”
- Height 5-1/4”
- 1-1/4” D. pop-up drain and flexiblehoses with 9/16” – 24 UNEF connections.
- Max flow rate 1.2 GPM
- ADA compliant

031	Chrome	1.422	708	Copper Br. PVD	2.246
149	Finox Br. Nickel	1.921	735	Warm Bronze PVD	2.105
299	Matte Black	1.921	726	Warm Bronze Br. PVD	2.246
720	Nickel PVD	2.105	710	Brass PVD	2.105
706	Black Metal PVD	2.105	727	Brass Br. PVD	2.246
707	Black Metal Br. PVD	2.246	279	Matte White	1.921
030	Copper PVD	2.105			

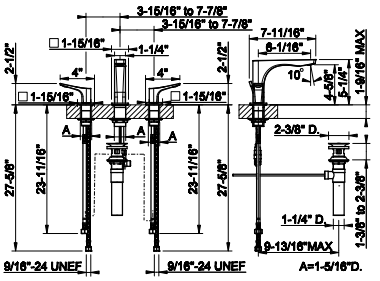

59012



Widespread washbasin mixer without pop-up assembly
- Spout projection 6-1/16”
- Height 5-1/4”
- Drain not included - See DRAINS section
- Max flow rate 1.2 GPM
- ADA compliant

031	Chrome	1.308	708	Copper Br. PVD	2.065
149	Finox Br. Nickel	1.766	735	Warm Bronze PVD	1.936
299	Matte Black	1.766	726	Warm Bronze Br. PVD	2.065
720	Nickel PVD	1.936	710	Brass PVD	1.936
706	Black Metal PVD	1.936	727	Brass Br. PVD	2.065
707	Black Metal Br. PVD	2.065	279	Matte White	1.766
030	Copper PVD	1.936			

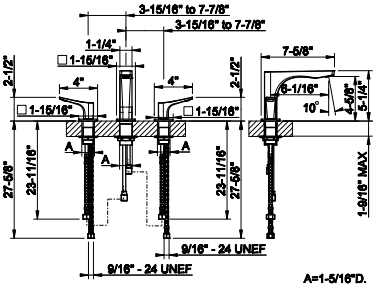

44697

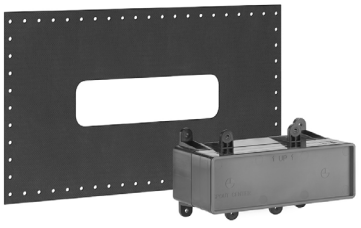

Wall-mounted washbasin mixer control rough valve
- 1/2” connections

031	Chrome	547

44697+59089

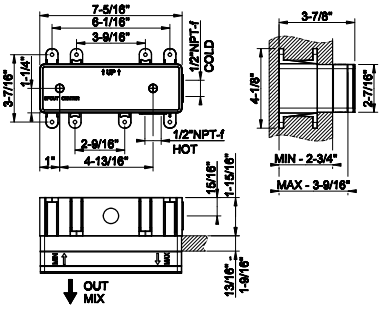

59089

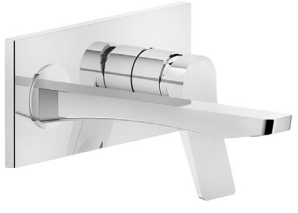

External parts wall-mounted mixer, medium spout, without waste
- Max flow rate 1,2 GPM
- Spout projection 8-7/16”
- Drain not included - See DRAINS section
- Requires in-wall rough valve 44697

031	Chrome	1.099	708	Copper Br. PVD	1.736
149	Finox Br. Nickel	1.484	735	Warm Bronze PVD	1.627
299	Matte Black	1.484	726	Warm Bronze Br. PVD	1.736
720	Nickel PVD	1.627	710	Brass PVD	1.627
706	Black Metal PVD	1.627	727	Brass Br. PVD	1.736
707	Black Metal Br. PVD	1.736	279	Matte White	1.484
030	Copper PVD	1.627			

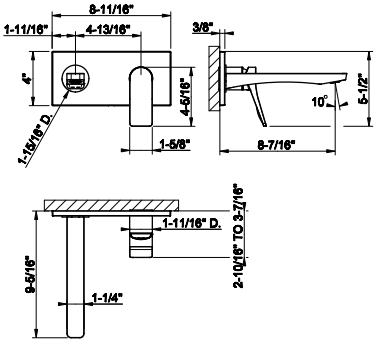

RILIEVO

48089+59090

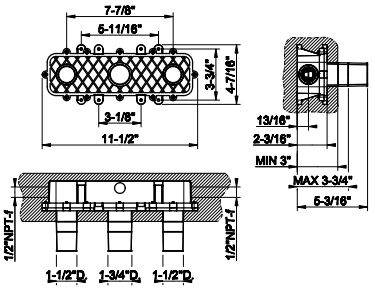

48089

Wall-mounted washbasin mixer rough valve
• Drain not included - See DRAINS section

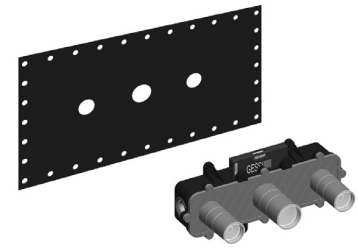

031	Chrome	1.069

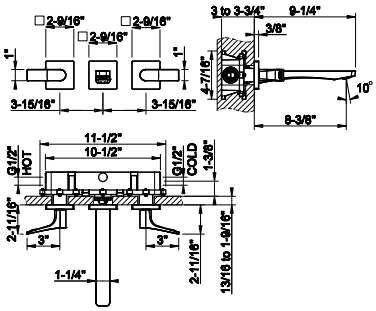

59090

TRIM PARTS ONLY Wall mounted washbasin mixer trim, without waste.
• Spout projection 8-3/8”
• Drain not included - See DRAINS section
• Requires in-wall rough valve 48089
• Max flow rate 1.2 GPM
• ADA compliant

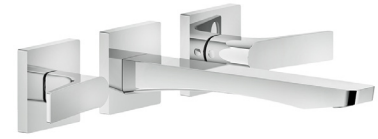

031	Chrome	1.308	708	Copper Br. PVD	2.065
149	Finox Br. Nickel	1.766	735	Warm Bronze PVD	1.936
299	Matte Black	1.766	726	Warm Bronze Br. PVD	2.065
720	Nickel PVD	1.936	710	Brass PVD	1.936
706	Black Metal PVD	1.936	727	Brass Br. PVD	2.065
707	Black Metal Br. PVD	2.065	279	Matte White	1.766
030	Copper PVD	1.936			

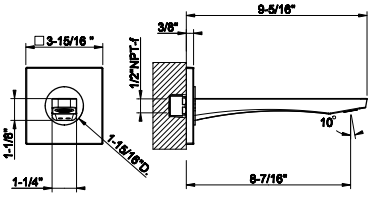

59100

Wall-mounted spout only
• 1/2” connections with separate control (not included)
• Spout projection 8-7/16”
• Drain not included- See DRAINS section
• Requires mixer control 59106 + 26612
• Max flow rate 1.2 GPM

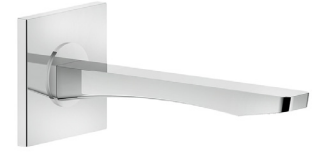

031	Chrome	659	708	Copper Br. PVD	1.042
149	Finox Br. Nickel	889	735	Warm Bronze PVD	977
299	Matte Black	889	726	Warm Bronze Br. PVD	1.042
720	Nickel PVD	977	710	Brass PVD	977
706	Black Metal PVD	977	727	Brass Br. PVD	1.042
707	Black Metal Br. PVD	1.042	279	Matte White	889
030	Copper PVD	977			



63399

Ceiling-mounted washbasin spout only
- Spout length 63”
- Drain not included - See DRAINS section
- Requires mixer control
- Maxflow rate 1.2 gpm

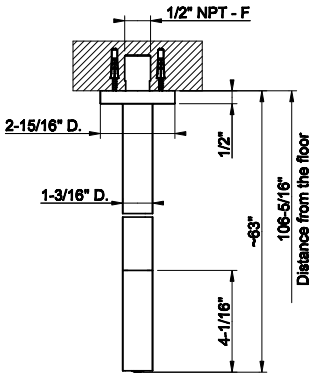

031	Chrome	1.777	030	Copper PVD	2.631
275	Matte Cipria	2.279	708	Copper Br. PVD	2.806
273	Matte Greige	2.279	735	Warm Bronze PVD	2.631
277	Glossy Ocra	2.666	726	Warm Bronze Br. PVD	2.806
278	Glossy Coral	2.666	710	Brass PVD	2.631
276	Matte Agave	2.279	727	Brass Br. PVD	2.806
149	Finox Br. Nickel	2.399	246	Gold PVD	2.986
299	Matte Black	2.399	716	Gold Br. PVD	2.986
720	Nickel PVD	2.631	187	Aged Bronze	2.806
706	Black Metal PVD	2.631	713	Antique Brass	2.806
707	Black Metal Br. PVD	2.806	845	Dark Bronze	2.666



63499

Ceiling-mounted washbasin spout only
- Custom length: Minimum 5-15/16” - Maximum 74-13/16”
- Drain not included - See DRAINS section
- Requires mixer control
- Max flow rate 1.2 gpm

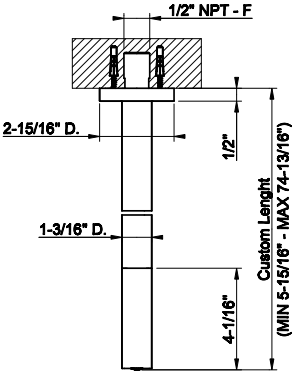

031	Chrome	2.548	030	Copper PVD	3.769
275	Matte Cipria	3.439	708	Copper Br. PVD	4.022
273	Matte Greige	3.439	735	Warm Bronze PVD	3.769
277	Glossy Ocra	3.439	726	Warm Bronze Br. PVD	4.022
278	Glossy Coral	3.439	710	Brass PVD	3.769
276	Matte Agave	3.439	727	Brass Br. PVD	4.022
149	Finox Br. Nickel	3.439	246	Gold PVD	4.281
299	Matte Black	3.439	716	Gold Br. PVD	4.281
720	Nickel PVD	3.769	187	Aged Bronze	4.022
706	Black Metal PVD	3.769	713	Antique Brass	4.022
707	Black Metal Br. PVD	4.022	845	Dark Bronze	4.022

RILIEVO

48112+59109

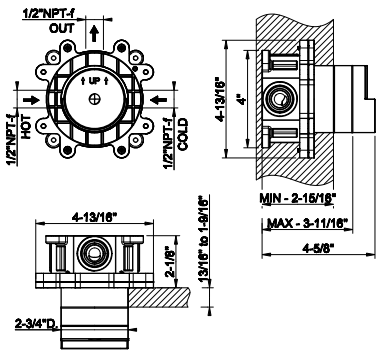

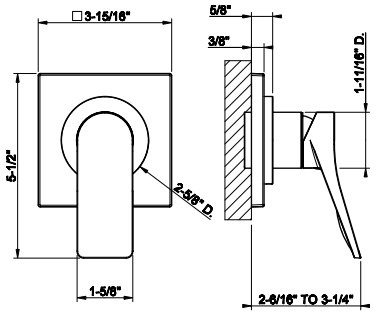

48112

Wall-mounted one-way mixer control rough valve for trim 48106
- 1/2" connections
- Drain not included - See DRAINS section

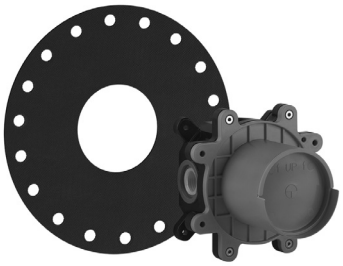

031	Chrome	480

59109

TRIM PARTS ONLY Wall-mounted washbasin mixer control
- For spout 59100
- 1/2" connections
- Drain not included - See DRAINS section
- Requires in-wall rough valve 46112
- ADA compliant



031	Chrome	573	708	Copper Br. PVD	907
149	Finox Br. Nickel	776	735	Warm Bronze PVD	849
299	Matte Black	776	726	Warm Bronze Br. PVD	907
720	Nickel PVD	849	710	Brass PVD	849
706	Black Metal PVD	849	727	Brass Br. PVD	907
707	Black Metal Br. PVD	907	279	Matte White	776
030	Copper PVD	849			

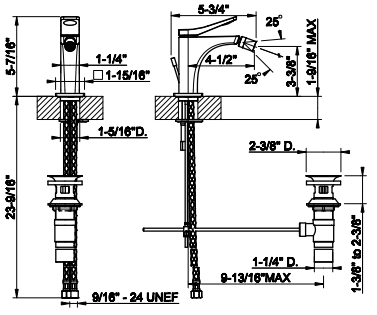

59007

Single lever bidet mixer with pop-up assembly
- Spout projection 4-1/2"
- Height 5-7/16"
- 1-1/4" D. pop-up drain and flexible hoses with 9/16" – 24 UNEF connections.
- ADA compliant



031	Chrome	857	708	Copper Br. PVD	1.353
149	Finox Br. Nickel	1.156	735	Warm Bronze PVD	1.269
299	Matte Black	1.156	726	Warm Bronze Br. PVD	1.353
720	Nickel PVD	1.269	710	Brass PVD	1.269
706	Black Metal PVD	1.269	727	Brass Br. PVD	1.353
707	Black Metal Br. PVD	1.353	279	Matte White	1.156
030	Copper PVD	1.269			



48189

Floor-mounted tub filler in-floor rough valve

031	Chrome	847

48189+59131

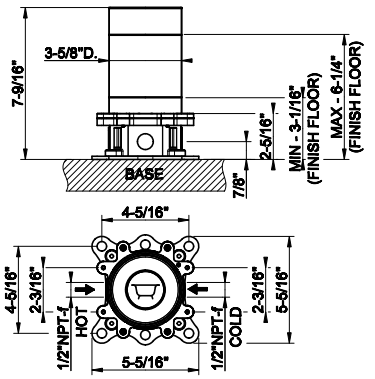



59131

TRIM PARTS ONLY Floor-mounted tub filler
- Handshower
- 59” flex hose
- Diverter
- Requires in-floor rough valve 48189
- Handshowermax flow rate 1.75 GPM
- Spout: mixed flow rate 6 GPM at 60 PSI

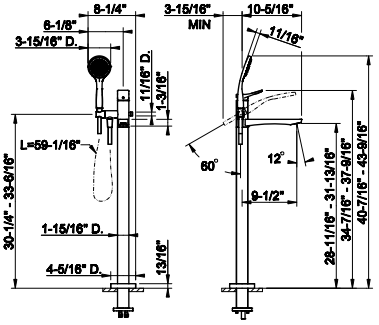

031	Chrome	4.384	708	Copper Br. PVD	6.926
149	Finox Br. Nickel	5.918	735	Warm Bronze PVD	6.489
299	Matte Black	5.918	726	Warm Bronze Br. PVD	6.926
720	Nickel PVD	6.489	710	Brass PVD	6.489
706	Black Metal PVD	6.489	727	Brass Br. PVD	6.926
707	Black Metal Br. PVD	6.926	279	Matte White	5.918
030	Copper PVD	6.489			



59037

Three-hole roman tub set
- Diverter in the spout.
- Spout projection 7-9/16”
- Height 4-7/16”
- 59” flexible hose and pull-out antilimestone handshower.
- Handshower Max flow rate 1.75 GPM
- Spout: mixed flow rate 5 GPM at 60 PSI

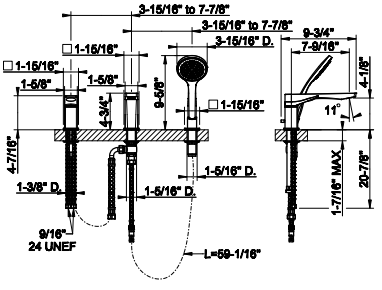

031	Chrome	2.510	708	Copper Br. PVD	3.965
149	Finox Br. Nickel	3.388	735	Warm Bronze PVD	3.713
299	Matte Black	3.388	726	Warm Bronze Br. PVD	3.965
720	Nickel PVD	3.713	710	Brass PVD	3.713
706	Black Metal PVD	3.713	727	Brass Br. PVD	3.965
707	Black Metal Br. PVD	3.965	279	Matte White	3.388
030	Copper PVD	3.713			

RILIEVO

59043

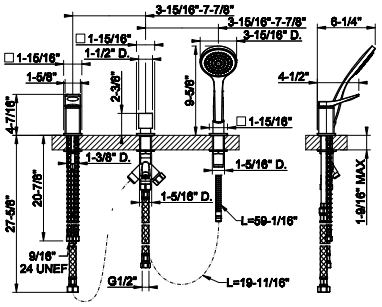

Three-hole roman tub set
- Diverter
- Handshower
- 59” flex hose
- Handshower Max flow rate 1.75 GPM



031	Chrome	2.246	708	Copper Br. PVD	3.549
149	Finox Br. Nickel	3.033	735	Warm Bronze PVD	3.325
299	Matte Black	3.033	726	Warm Bronze Br. PVD	3.549
720	Nickel PVD	3.325	710	Brass PVD	3.325
706	Black Metal PVD	3.325	727	Brass Br. PVD	3.549
707	Black Metal Br. PVD	3.549	279	Matte White	3.033
030	Copper PVD	3.325			

59103

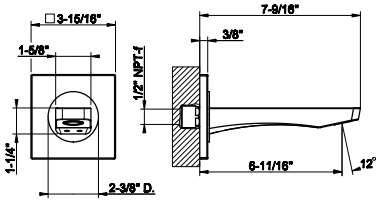

Wall mounted Bath spout only
- 1/2’ connections with separate control (not included)
- Spout projection 6-11/16”
- Drain not included - See DRAINS section
- Requires mixer control 59047
- Flow rate 6.4 GPM at 60 PSI

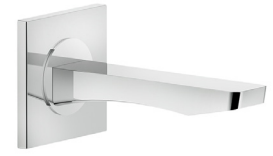

031	Chrome	686	708	Copper Br. PVD	1.085
149	Finox Br. Nickel	926	735	Warm Bronze PVD	1.016
299	Matte Black	926	726	Warm Bronze Br. PVD	1.085
720	Nickel PVD	1.016	710	Brass PVD	1.016
706	Black Metal PVD	1.016	727	Brass Br. PVD	1.085
707	Black Metal Br. PVD	1.085	279	Matte White	926
030	Copper PVD	1.016			

09279+59132

09279

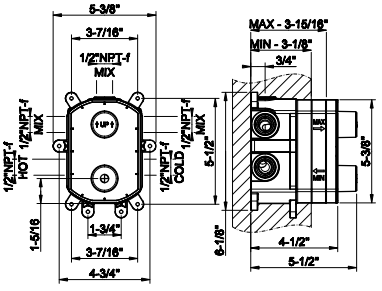

In-wall thermostatic rough valve for 1/2/3-way diverter function
- 1/2” connections
- Vertical application
- Anti-scalding
- Non-Shared function

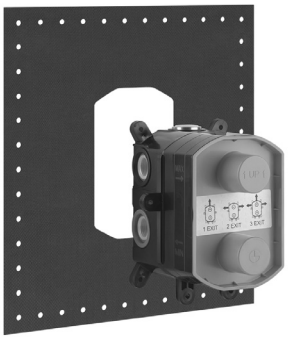

031	Chrome	877			

59132

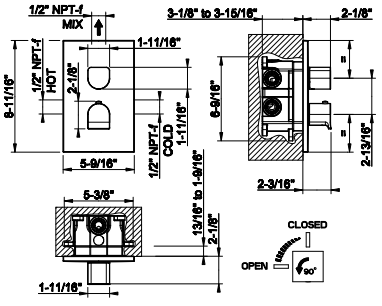

TRIM PARTS ONLY External parts for thermostatic with single volume control
- Single backplate
- 1/2” connections
- Vertical application
- Anti-scalding
- Requires in-wall rough valve 09279



031	Chrome	1.353	708	Copper Br. PVD	2.137
149	Finox Br. Nickel	1.828	735	Warm Bronze PVD	2.004
299	Matte Black	1.828	726	Warm Bronze Br. PVD	2.137
720	Nickel PVD	2.004	710	Brass PVD	2.004
706	Black Metal PVD	2.004	727	Brass Br. PVD	2.137
707	Black Metal Br. PVD	2.137	279	Matte White	1.828
030	Copper PVD	2.004			

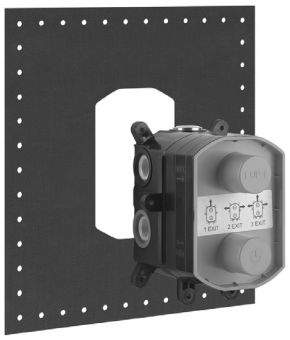

09279

In-wall thermostatic rough valve for 1/2/3-way diverter function
- 1/2” connections
- Vertical application
- Anti-scalding
- Non-Shared function

031	Chrome	877

09279+59134

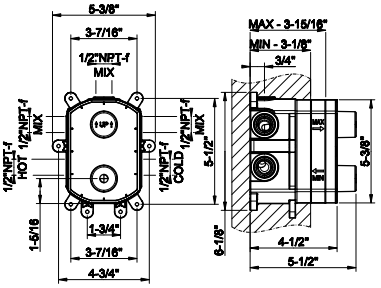



59134

TRIM PARTS ONLY External parts for 2-way thermostatic diverter and volumne control
- Single backplate
- 1/2” connections
- Vertical application
- Anti-scalding
- Requires in-wall rough valve 09279

031	Chrome	1.353	708	Copper Br. PVD	2.137
149	Finox Br. Nickel	1.828	735	Warm Bronze PVD	2.004
299	Matte Black	1.828	726	Warm Bronze Br. PVD	2.137
720	Nickel PVD	2.004	710	Brass PVD	2.004
706	Black Metal PVD	2.004	727	Brass Br. PVD	2.137
707	Black Metal Br. PVD	2.137	279	Matte White	1.828
030	Copper PVD	2.004			

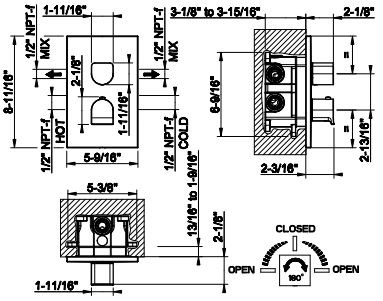

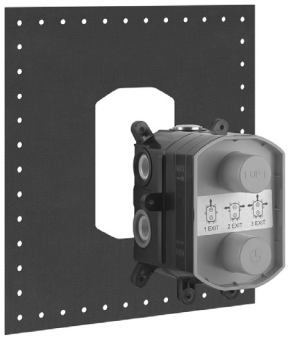

09279

In-wall thermostatic rough valve for 1/2/3-way diverter function
- 1/2” connections
- Vertical application
- Anti-scalding
- Non-Shared function

031	Chrome	877

09279+59136

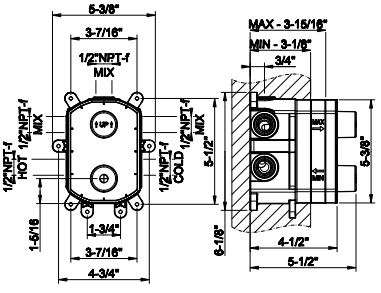



59136

TRIM PARTS ONLY External parts for 3-way thermostatic diverter and volume control
- Single backplate
- 1/2” connections
- Vertical application
- Anti-scalding
- Requires in-wall rough valve 09279

031	Chrome	1.353	708	Copper Br. PVD	2.137
149	Finox Br. Nickel	1.828	735	Warm Bronze PVD	2.004
299	Matte Black	1.828	726	Warm Bronze Br. PVD	2.137
720	Nickel PVD	2.004	710	Brass PVD	2.004
706	Black Metal PVD	2.004	727	Brass Br. PVD	2.137
707	Black Metal Br. PVD	2.137	279	Matte White	1.828
030	Copper PVD	2.004			

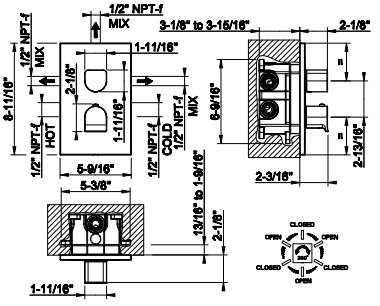

RILIEVO

09272+59173

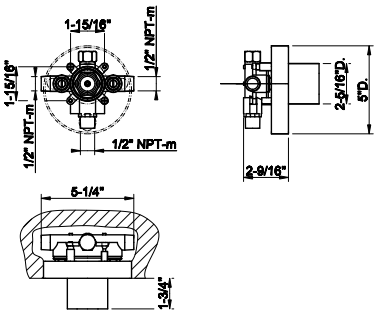

09272

In-wall single exit pressure balance rough valve
- 1/2” connections



031	Chrome	371

59173

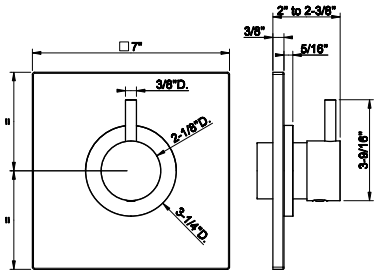

TRIM PARTS ONLY External parts for single exit pressure balance
- Single Backplate
- 1/2” connections
- Requires in-wall rough valve 09272
- ADA compliant



031	Chrome	627	708	Copper Br. PVD	992
149	Finox Br. Nickel	847	735	Warm Bronze PVD	929
299	Matte Black	847	726	Warm Bronze Br. PVD	992
720	Nickel PVD	929	710	Brass PVD	929
706	Black Metal PVD	929	727	Brass Br. PVD	992
707	Black Metal Br. PVD	992	279	Matte White	847
030	Copper PVD	929			

09274+59174

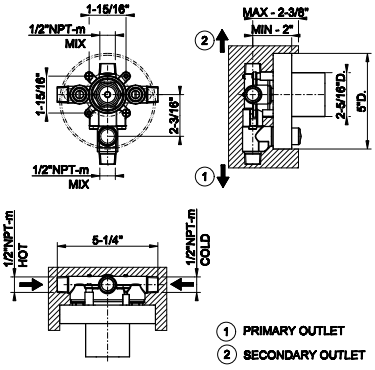

09274

In-wall pressure balance rough valve with 2-way diverter
- 1/2” connections
- Non-Shared Function



031	Chrome	443

59174

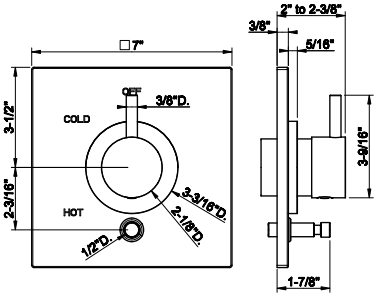

TRIM PARTS ONLY External parts for Pressure balance with 2-way diverter
- 1/2” connections
- Single Backplate
- Requires in-wallrough valve 09274



031	Chrome	700	708	Copper Br. PVD	1.103
149	Finox Br. Nickel	943	735	Warm Bronze PVD	1.034
299	Matte Black	943	726	Warm Bronze Br. PVD	1.103
720	Nickel PVD	1.034	710	Brass PVD	1.034
706	Black Metal PVD	1.034	727	Brass Br. PVD	1.103
707	Black Metal Br. PVD	1.103	279	Matte White	943
030	Copper PVD	1.034			

33095



Wall-fixing headshower.
- 1/2” connections
- Projection from the wall to center15-1/2”
- Total projection 21-5/8”
- Max flow rate1.75 GPM

239	Steel Br.	4.784	726	Warm Bronze Br. PVD	7.559
238	Mirror Steel	4.784	710	Brass PVD	7.081
299	Matte Black	6.459	727	Brass Br. PVD	7.559
720	Nickel PVD	7.081	246	Gold PVD	8.038
706	Black Metal PVD	7.081	716	Gold Br. PVD	8.038
707	Black Metal Br. PVD	7.559	187	Aged Bronze	7.559
030	Copper PVD	7.081	713	Antique Brass	7.559
708	Copper Br. PVD	7.559	845	Dark Bronze	7.559
735	Warm Bronze PVD	7.081	279	Matte White	6.459

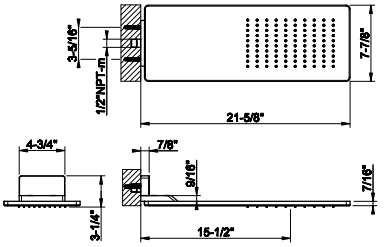

59158



Wall-mounted adjustable shower head with arm.
- 1/2” connections.
- Projection from wall to center 15-1/2”
- Total projection 20-3/8”
- Max flow rate 1.75 GPM

031	Chrome	1.274	726	Warm Bronze Br. PVD	2.011
149	Finox Br. Nickel	1.719	710	Brass PVD	1.884
299	Matte Black	1.719	727	Brass Br. PVD	2.011
720	Nickel PVD	1.884	246	Gold PVD	2.141
706	Black Metal PVD	1.884	716	Gold Br. PVD	2.141
707	Black Metal Br. PVD	2.011	187	Aged Bronze	2.011
030	Copper PVD	1.884	713	Antique Brass	2.011
708	Copper Br. PVD	2.011	845	Dark Bronze	2.011
735	Warm Bronze PVD	1.884	279	Matte White	1.719

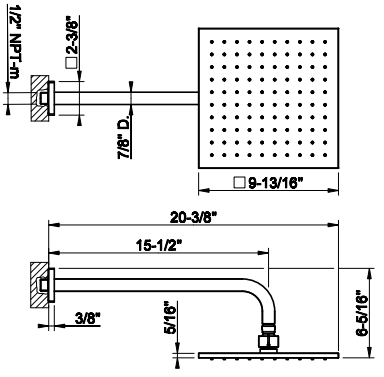

59155



Ceiling-mounted adjustable shower head with arm.
- 1/2” connections.
- Projection from ceiling 10-1/4”
- Max flow rate 1.75 GPM

031	Chrome	1.142	726	Warm Bronze Br. PVD	1.806
149	Finox Br. Nickel	1.541	710	Brass PVD	1.691
299	Matte Black	1.541	727	Brass Br. PVD	1.806
720	Nickel PVD	1.691	246	Gold PVD	1.919
706	Black Metal PVD	1.691	716	Gold Br. PVD	1.919
707	Black Metal Br. PVD	1.806	187	Aged Bronze	1.806
030	Copper PVD	1.691	713	Antique Brass	1.806
708	Copper Br. PVD	1.806	845	Dark Bronze	1.806
735	Warm Bronze PVD	1.691	279	Matte White	1.541

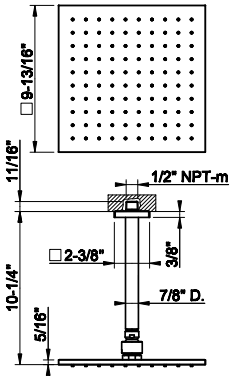

59148



Wall-mounted adjustable shower head with arm.
- 1/2” connections.
- Projection from wall to center 15-1/2”
- Total projection 20-3/8”
- Max flow rate 1.75 GPM

031	Chrome	1.176	726	Warm Bronze Br. PVD	1.855
149	Finox Br. Nickel	1.585	710	Brass PVD	1.738
299	Matte Black	1.585	727	Brass Br. PVD	1.855
720	Nickel PVD	1.738	246	Gold PVD	1.976
706	Black Metal PVD	1.738	716	Gold Br. PVD	1.976
707	Black Metal Br. PVD	1.855	187	Aged Bronze	1.855
030	Copper PVD	1.738	713	Antique Brass	1.855
708	Copper Br. PVD	1.855	845	Dark Bronze	1.855
735	Warm Bronze PVD	1.738	279	Matte White	1.585

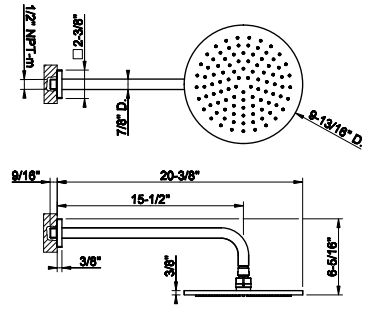

RILIEVO

59152

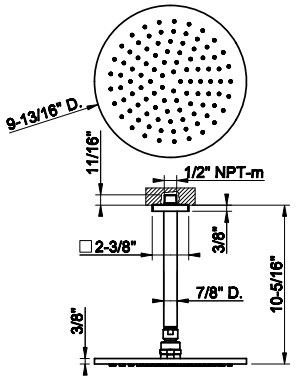

Ceiling-mounted adjustable shower head with arm.
- 1/2" connections.
- Projection from ceiling 10-5/16"
- Max flow rate 1.75 GPM



031	Chrome	1.047	726	Warm Bronze Br. PVD	1.654
149	Finox Br. Nickel	1.413	710	Brass PVD	1.550
299	Matte Black	1.413	727	Brass Br. PVD	1.654
720	Nickel PVD	1.550	246	Gold PVD	1.759
706	Black Metal PVD	1.550	716	Gold Br. PVD	1.759
707	Black Metal Br. PVD	1.654	187	Aged Bronze	1.654
030	Copper PVD	1.550	713	Antique Brass	1.654
708	Copper Br. PVD	1.654	845	Dark Bronze	1.654
735	Warm Bronze PVD	1.550	279	Matte White	1.413

59242

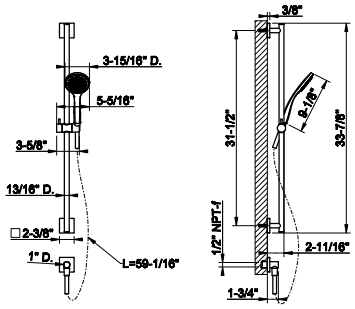

Handshower and adjustable sliding rail set
- Adjustable bar
- Adjustable hook
- 59" Flex hose
- Wall elbow
- Max flow rate 1.75 GPM



031	Chrome	911	708	Copper Br. PVD	1.439
149	Finox Br. Nickel	1.231	735	Warm Bronze PVD	1.348
299	Matte Black	1.231	726	Warm Bronze Br. PVD	1.439
720	Nickel PVD	1.348	710	Brass PVD	1.348
706	Black Metal PVD	1.348	727	Brass Br. PVD	1.439
707	Black Metal Br. PVD	1.439	279	Matte White	1.231
030	Copper PVD	1.348			

59245

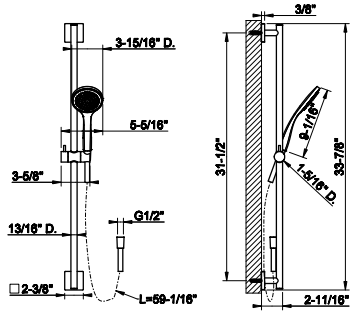

Handshower and adjustable sliding rail set
- Adjustable bar
- Adjustable hook
- 59" Flex hose
- Requires wall elbow 59169
- Max flow rate 1.75 GPM



031	Chrome	701	708	Copper Br. PVD	1.107
149	Finox Br. Nickel	946	735	Warm Bronze PVD	1.035
299	Matte Black	946	726	Warm Bronze Br. PVD	1.107
720	Nickel PVD	1.035	710	Brass PVD	1.035
706	Black Metal PVD	1.035	727	Brass Br. PVD	1.107
707	Black Metal Br. PVD	1.107	279	Matte White	946
030	Copper PVD	1.035			

59123

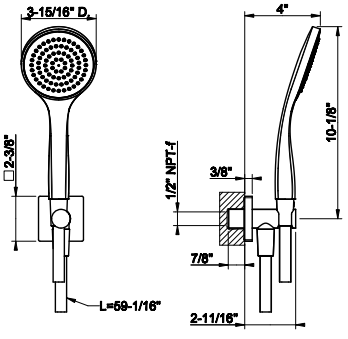

Handshower set
- Fixed hook.
- Wall elbow
- 59" flex hose
- Max flow rate 1.75 GPM



031	Chrome	557	708	Copper Br. PVD	879
149	Finox Br. Nickel	751	735	Warm Bronze PVD	824
299	Matte Black	751	726	Warm Bronze Br. PVD	879
720	Nickel PVD	824	710	Brass PVD	824
706	Black Metal PVD	824	727	Brass Br. PVD	879
707	Black Metal Br. PVD	879	279	Matte White	751
030	Copper PVD	824			



63099

Magnetic anti-limestone handshower set
- Fixed hook
- Wall elbow
- 59” Cromalux flex hose
- Max flow rate 1.75 GPM

031	Chrome	1.213	726	Warm Bronze Br. PVD	1.916
149	Finox Br. Nickel	1.638	710	Brass PVD	1.794
299	Matte Black	1.638	727	Brass Br. PVD	1.916
720	Nickel PVD	1.794	246	Gold PVD	2.037
706	Black Metal PVD	1.794	716	Gold Br. PVD	2.037
707	Black Metal Br. PVD	1.916	187	Aged Bronze	1.916
030	Copper PVD	1.794	713	Antique Brass	1.916
708	Copper Br. PVD	1.916	845	Dark Bronze	1.916
735	Warm Bronze PVD	1.794			

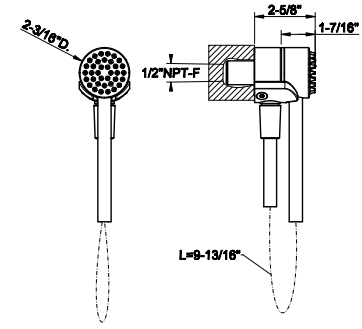



59169

Wall elbow with backplate
- 1/2” connection

031	Chrome	287	708	Copper Br. PVD	452
149	Finox Br. Nickel	386	735	Warm Bronze PVD	424
299	Matte Black	386	726	Warm Bronze Br. PVD	452
720	Nickel PVD	424	710	Brass PVD	424
706	Black Metal PVD	424	727	Brass Br. PVD	452
707	Black Metal Br. PVD	452	279	Matte White	386
030	Copper PVD	424			

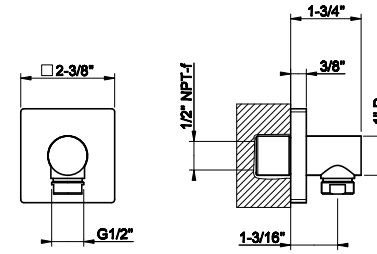



59161

Wall elbow with built in water intake and fixed hook
- 1/2” connection

031	Chrome	332	708	Copper Br. PVD	524
149	Finox Br. Nickel	448	735	Warm Bronze PVD	492
299	Matte Black	448	726	Warm Bronze Br. PVD	524
720	Nickel PVD	492	710	Brass PVD	492
706	Black Metal PVD	492	727	Brass Br. PVD	524
707	Black Metal Br. PVD	524	279	Matte White	448
030	Copper PVD	492			

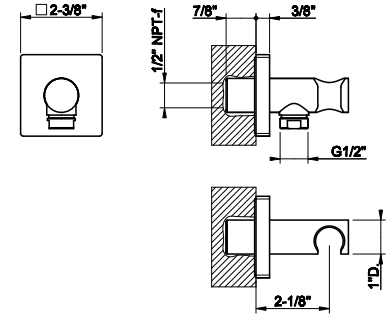



59157

Fixed handshower hook.

031	Chrome	304	708	Copper Br. PVD	479
149	Finox Br. Nickel	410	735	Warm Bronze PVD	449
299	Matte Black	410	726	Warm Bronze Br. PVD	479
720	Nickel PVD	449	710	Brass PVD	449
706	Black Metal PVD	449	727	Brass Br. PVD	479
707	Black Metal Br. PVD	479	279	Matte White	410
030	Copper PVD	449			

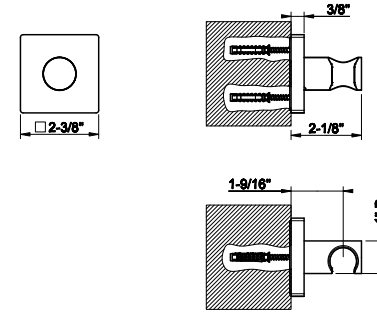

RILIEVO

59160

Adjustable handshower hook

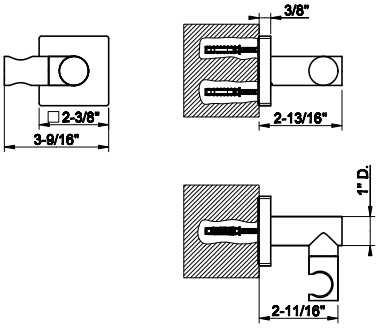

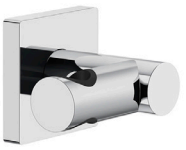

031	Chrome	449	708	Copper Br. PVD	709
149	Finox Br. Nickel	607	735	Warm Bronze PVD	664
299	Matte Black	607	726	Warm Bronze Br. PVD	709
720	Nickel PVD	664	710	Brass PVD	664
706	Black Metal PVD	664	727	Brass Br. PVD	709
707	Black Metal Br. PVD	709	279	Matte White	607
030	Copper PVD	664			

14372

Handshower
- Max flow rate 1.75 GPM

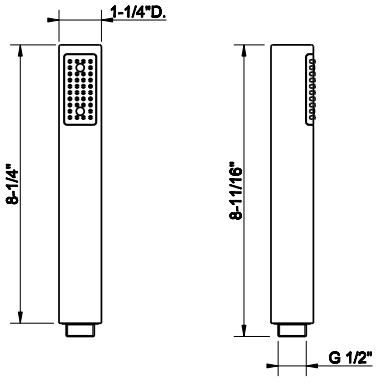



031	Chrome	134	726	Warm Bronze Br. PVD	394
149	Finox Br. Nickel	317	710	Brass PVD	371
299	Matte Black	225	727	Brass Br. PVD	394
720	Nickel PVD	371	246	Gold PVD	418
706	Black Metal PVD	371	716	Gold Br. PVD	418
707	Black Metal Br. PVD	394	187	Aged Bronze	394
030	Copper PVD	371	713	Antique Brass	394
708	Copper Br. PVD	394	845	Dark Bronze	394
735	Warm Bronze PVD	371	279	Matte White	317

14370

Antilimestone handshower
- Single spray
- Max flow rate 1.75 GPM

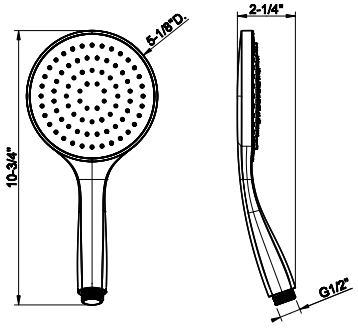



031	Chrome	189	726	Warm Bronze Br. PVD	465
149	Finox Br. Nickel	377	710	Brass PVD	435
299	Matte Black	377	727	Brass Br. PVD	465
147	Chrome Br.	377	246	Gold PVD	493
720	Nickel PVD	435	716	Gold Br. PVD	493
706	Black Metal PVD	435	187	Aged Bronze	465
707	Black Metal Br. PVD	465	713	Antique Brass	465
030	Copper PVD	435	845	Dark Bronze	465
708	Copper Br. PVD	465	279	Matte White	377
735	Warm Bronze PVD	435			

14376

Handshower with white insert
- 3-pattern spray
- Max flow rate 1.75 GPM

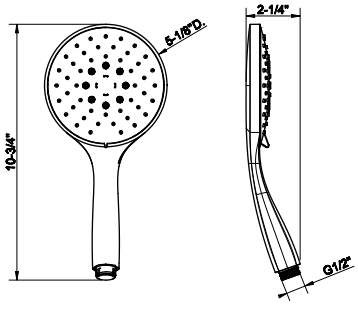



031	Chrome	390	726	Warm Bronze Br. PVD	656
149	Finox Br. Nickel	527	710	Brass PVD	616
299	Matte Black	527	727	Brass Br. PVD	656
147	Chrome Br.	527	246	Gold PVD	681
720	Nickel PVD	616	716	Gold Br. PVD	681
706	Black Metal PVD	616	187	Aged Bronze	656
707	Black Metal Br. PVD	656	713	Antique Brass	656
030	Copper PVD	616	845	Dark Bronze	656
708	Copper Br. PVD	656	279	Matte White	527
735	Warm Bronze PVD	616			



01637

59” flex hose

031	Chrome	134	726	Warm Bronze Br. PVD	214
149	Finox Br. Nickel	173	710	Brass PVD	203
299	Matte Black	173	727	Brass Br. PVD	214
147	Chrome Br.	173	246	Gold PVD	227
720	Nickel PVD	203	716	Gold Br. PVD	227
706	Black Metal PVD	203	187	Aged Bronze	214
707	Black Metal Br. PVD	214	713	Antique Brass	214
030	Copper PVD	203	845	Dark Bronze	214
708	Copper Br. PVD	214	279	Matte White	173
735	Warm Bronze PVD	203			

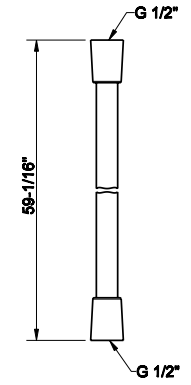



01724

Metal flexible hose, 59” length, 1/2” connector.

031	Chrome	196	726	Warm Bronze Br. PVD	308
149	Finox Br. Nickel	260	710	Brass PVD	288
299	Matte Black	260	727	Brass Br. PVD	308
147	Chrome Br.	260	246	Gold PVD	288
720	Nickel PVD	308	716	Gold Br. PVD	341
706	Black Metal PVD	288	187	Aged Bronze	308
707	Black Metal Br. PVD	308	713	Antique Brass	308
030	Copper PVD	288	845	Dark Bronze	308
708	Copper Br. PVD	308	279	Matte White	259
735	Warm Bronze PVD	288			

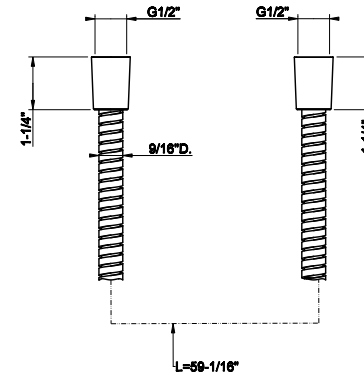

GESSI



RILIEVO
ACCESSORIES

59501

Wall-mounted soap dish, white



031	Chrome	444	708	Copper Br. PVD	701
149	Finox Br. Nickel	598	735	Warm Bronze PVD	657
299	Matte Black	598	726	Warm Bronze Br. PVD	701
720	Nickel PVD	657	710	Brass PVD	657
706	Black Metal PVD	657	727	Brass Br. PVD	701
707	Black Metal Br. PVD	701	279	Matte White	598
030	Copper PVD	657			

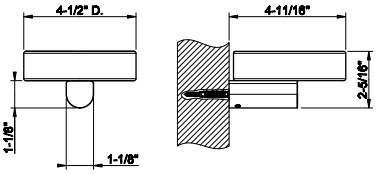

59502

Wall-mounted soap dish, black



031	Chrome	444	708	Copper Br. PVD	701
149	Finox Br. Nickel	598	735	Warm Bronze PVD	657
299	Matte Black	598	726	Warm Bronze Br. PVD	701
720	Nickel PVD	657	710	Brass PVD	657
706	Black Metal PVD	657	727	Brass Br. PVD	701
707	Black Metal Br. PVD	701	279	Matte White	598
030	Copper PVD	657			

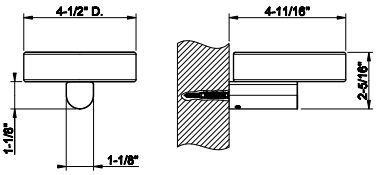

59507

Wall-mounted holder, white



031	Chrome	513	708	Copper Br. PVD	810
149	Finox Br. Nickel	693	735	Warm Bronze PVD	758
299	Matte Black	693	726	Warm Bronze Br. PVD	810
720	Nickel PVD	758	710	Brass PVD	758
706	Black Metal PVD	758	727	Brass Br. PVD	810
707	Black Metal Br. PVD	810	279	Matte White	693
030	Copper PVD	758			

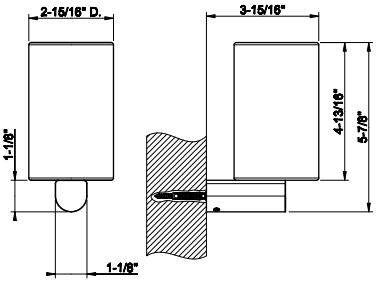

59508

Wall-mounted holder, black



031	Chrome	513	708	Copper Br. PVD	810
149	Finox Br. Nickel	693	735	Warm Bronze PVD	758
299	Matte Black	693	726	Warm Bronze Br. PVD	810
720	Nickel PVD	758	710	Brass PVD	758
706	Black Metal PVD	758	727	Brass Br. PVD	810
707	Black Metal Br. PVD	810	279	Matte White	693
030	Copper PVD	758			

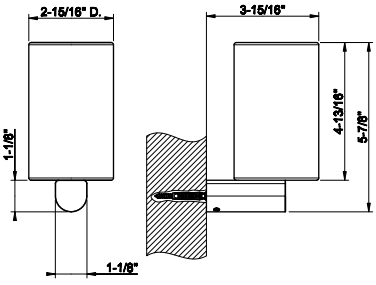

RILIEVO ACCESSORIES

59513

Wall-mounted liquid soap dispenser , white

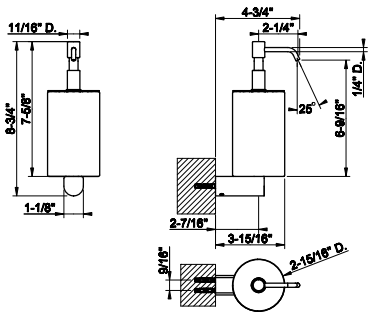



031	Chrome	728	708	Copper Br. PVD	1.150
149	Finox Br. Nickel	984	735	Warm Bronze PVD	1.078
299	Matte Black	984	726	Warm Bronze Br. PVD	1.150
720	Nickel PVD	1.078	710	Brass PVD	1.078
706	Black Metal PVD	1.078	727	Brass Br. PVD	1.150
707	Black Metal Br. PVD	1.150	279	Matte White	984
030	Copper PVD	1.078			

59514

Wall-mounted liquid soap dispenser - black

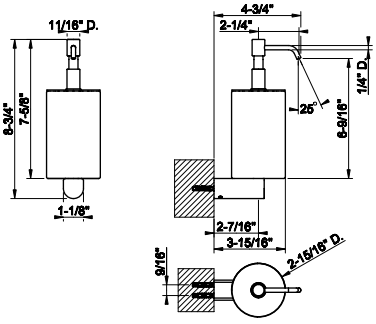



031	Chrome	728	708	Copper Br. PVD	1.150
149	Finox Br. Nickel	984	735	Warm Bronze PVD	1.078
299	Matte Black	984	726	Warm Bronze Br. PVD	1.150
720	Nickel PVD	1.078	710	Brass PVD	1.078
706	Black Metal PVD	1.078	727	Brass Br. PVD	1.150
707	Black Metal Br. PVD	1.150	279	Matte White	984
030	Copper PVD	1.078			

59519

Wall-mounted toilet brush holder

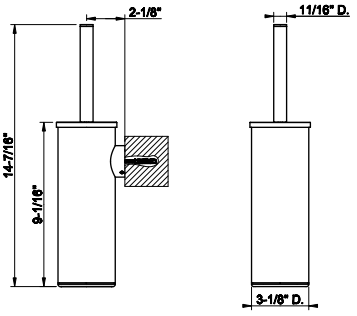



031	Chrome	659	735	Warm Bronze PVD	977
149	Finox Br. Nickel	889	726	Warm Bronze Br. PVD	1.042
299	Matte Black	889	710	Brass PVD	977
720	Nickel PVD	977	727	Brass Br. PVD	1.042
706	Black Metal PVD	977	187	Aged Bronze	1.042
707	Black Metal Br. PVD	1.042	713	Antique Brass	1.042
030	Copper PVD	977	279	Matte White	889
708	Copper Br. PVD	1.042			

59525

Standing soap holder, white

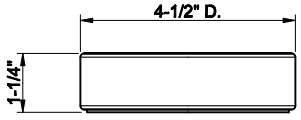

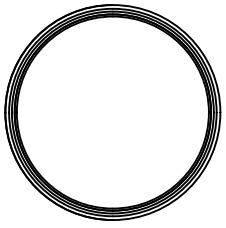



531	Matt White Ceramic	318			

59526

Standing soap holder, black



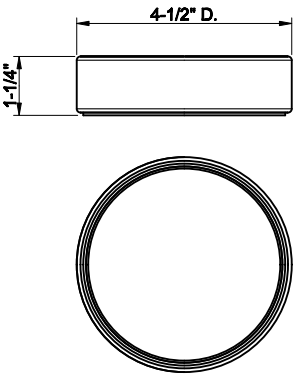

532	Matt Black Ceramic	413

59531

Standing tumbler holder, white



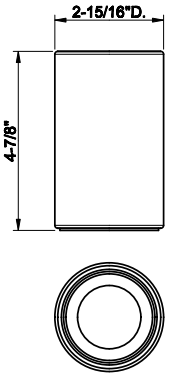

531	Matt White Ceramic	334

59532

Standing tumbler holder, black



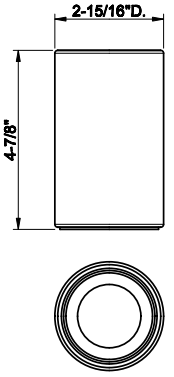

532	Matt Black Ceramic	334

59537

Standing soap dispenser holder, white



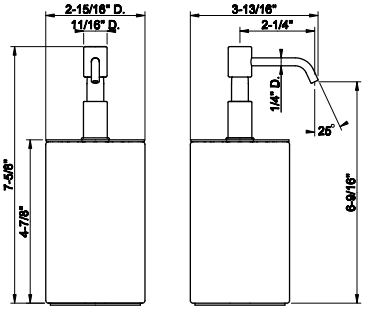

031	Chrome	551	735	Warm Bronze PVD	817
149	Finox Br. Nickel	745	726	Warm Bronze Br. PVD	871
299	Matte Black	745	710	Brass PVD	817
720	Nickel PVD	817	727	Brass Br. PVD	871
706	Black Metal PVD	817	187	Aged Bronze	871
707	Black Metal Br. PVD	871	713	Antique Brass	871
030	Copper PVD	817	845	Dark Bronze	871
708	Copper Br. PVD	871	279	Matte White	745

RILIEVO ACCESSORIES

59538

Standing soap dispenser holder, black

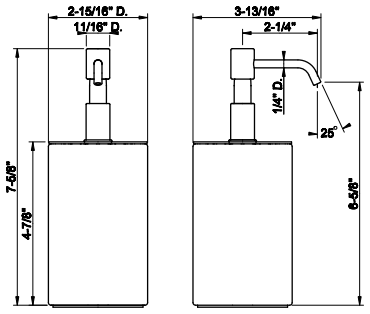



031	Chrome	551	735	Warm Bronze PVD	817
149	Finox Br. Nickel	745	726	Warm Bronze Br. PVD	871
299	Matte Black	745	710	Brass PVD	817
720	Nickel PVD	817	727	Brass Br. PVD	871
706	Black Metal PVD	817	187	Aged Bronze	871
707	Black Metal Br. PVD	871	713	Antique Brass	871
030	Copper PVD	817	845	Dark Bronze	871
708	Copper Br. PVD	871	279	Matte White	745

59543

Standing toilet brush holder

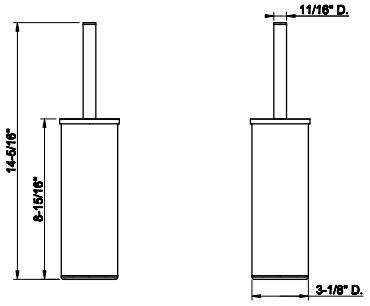



031	Chrome	546	735	Warm Bronze PVD	809
149	Finox Br. Nickel	739	726	Warm Bronze Br. PVD	863
299	Matte Black	739	710	Brass PVD	809
720	Nickel PVD	809	727	Brass Br. PVD	863
706	Black Metal PVD	809	187	Aged Bronze	863
707	Black Metal Br. PVD	863	713	Antique Brass	863
030	Copper PVD	809	279	Matte White	739
708	Copper Br. PVD	863			

59455

Wall-mounted tissue holder either vertical or horizontal

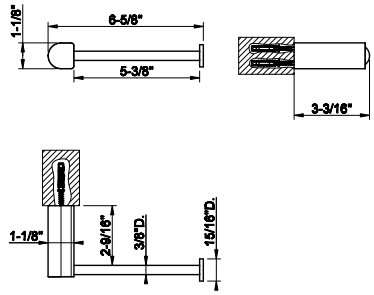



031	Chrome	227	708	Copper Br. PVD	359
149	Finox Br. Nickel	308	735	Warm Bronze PVD	337
299	Matte Black	308	726	Warm Bronze Br. PVD	359
720	Nickel PVD	337	710	Brass PVD	337
706	Black Metal PVD	337	727	Brass Br. PVD	359
707	Black Metal Br. PVD	359	279	Matte White	308
030	Copper PVD	337			

59415

Wall-mounted double tissue holder

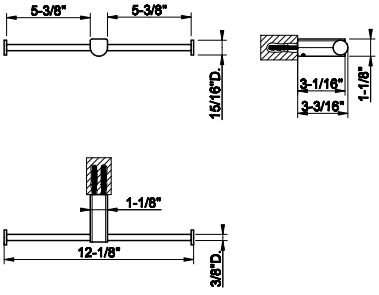



031	Chrome	287	708	Copper Br. PVD	452
149	Finox Br. Nickel	386	735	Warm Bronze PVD	424
299	Matte Black	386	726	Warm Bronze Br. PVD	452
720	Nickel PVD	424	710	Brass PVD	424
706	Black Metal PVD	424	727	Brass Br. PVD	452
707	Black Metal Br. PVD	452	279	Matte White	386
030	Copper PVD	424			

59449

Wall-mounted tissue holder with cover



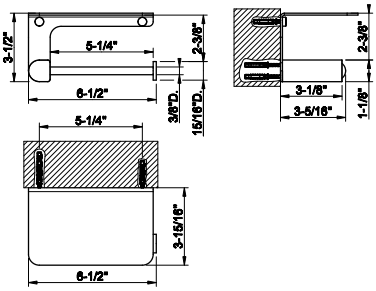

031	Chrome	525	708	Copper Br. PVD	828
149	Finox Br. Nickel	709	735	Warm Bronze PVD	777
299	Matte Black	709	726	Warm Bronze Br. PVD	828
720	Nickel PVD	777	710	Brass PVD	777
706	Black Metal PVD	777	727	Brass Br. PVD	828
707	Black Metal Br. PVD	828	279	Matte White	709
030	Copper PVD	777			

59450

Wall-mounted double tissue holder with cover



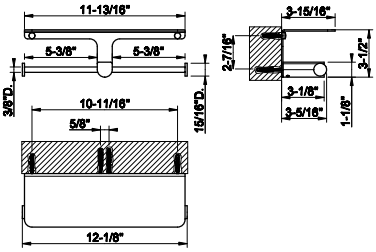

031	Chrome	726	708	Copper Br. PVD	1.146
149	Finox Br. Nickel	980	735	Warm Bronze PVD	1.075
299	Matte Black	980	726	Warm Bronze Br. PVD	1.146
720	Nickel PVD	1.075	710	Brass PVD	1.075
706	Black Metal PVD	1.075	727	Brass Br. PVD	1.146
707	Black Metal Br. PVD	1.146	279	Matte White	980
030	Copper PVD	1.075			

59397

12" towel rail.



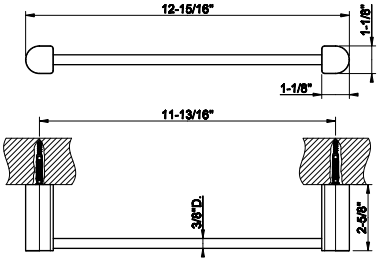

031	Chrome	332	708	Copper Br. PVD	524
149	Finox Br. Nickel	448	735	Warm Bronze PVD	492
299	Matte Black	448	726	Warm Bronze Br. PVD	524
720	Nickel PVD	492	710	Brass PVD	492
706	Black Metal PVD	492	727	Brass Br. PVD	524
707	Black Metal Br. PVD	524	279	Matte White	448
030	Copper PVD	492			

59400

18" towel rail.



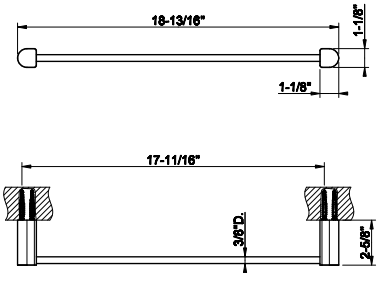

031	Chrome	343	708	Copper Br. PVD	543
149	Finox Br. Nickel	464	735	Warm Bronze PVD	510
299	Matte Black	464	726	Warm Bronze Br. PVD	543
720	Nickel PVD	510	710	Brass PVD	510
706	Black Metal PVD	510	727	Brass Br. PVD	543
707	Black Metal Br. PVD	543	279	Matte White	464
030	Copper PVD	510			

RILIEVO ACCESSORIES

59403

24” towel rail.

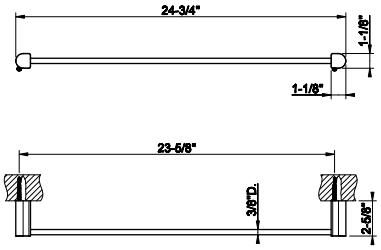



031	Chrome	374	708	Copper Br. PVD	592
149	Finox Br. Nickel	504	735	Warm Bronze PVD	555
299	Matte Black	504	726	Warm Bronze Br. PVD	592
720	Nickel PVD	555	710	Brass PVD	555
706	Black Metal PVD	555	727	Brass Br. PVD	592
707	Black Metal Br. PVD	592	279	Matte White	504
030	Copper PVD	555			

59405

24” double wall mounted towel rail.

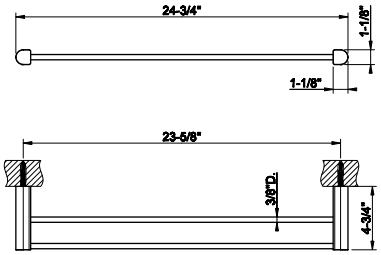



031	Chrome	584	708	Copper Br. PVD	923
149	Finox Br. Nickel	787	735	Warm Bronze PVD	863
299	Matte Black	787	726	Warm Bronze Br. PVD	923
720	Nickel PVD	863	710	Brass PVD	863
706	Black Metal PVD	863	727	Brass Br. PVD	923
707	Black Metal Br. PVD	923	279	Matte White	787
030	Copper PVD	863			

59407

24” shelf with towel holder

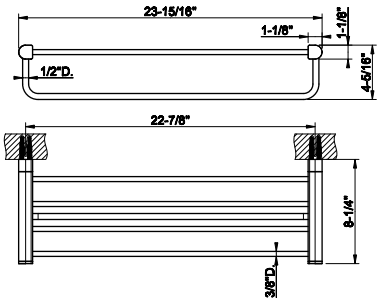



031	Chrome	860	708	Copper Br. PVD	1.356
149	Finox Br. Nickel	1.160	735	Warm Bronze PVD	1.272
299	Matte Black	1.160	726	Warm Bronze Br. PVD	1.356
720	Nickel PVD	1.272	710	Brass PVD	1.272
706	Black Metal PVD	1.272	727	Brass Br. PVD	1.356
707	Black Metal Br. PVD	1.356	279	Matte White	1.160
030	Copper PVD	1.272			

59509

Towel ring.

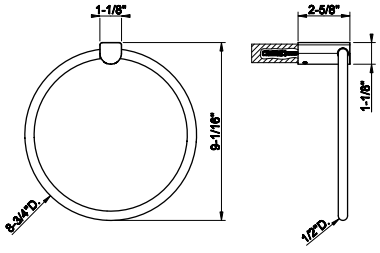

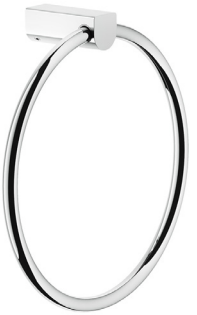

031	Chrome	327	708	Copper Br. PVD	516
149	Finox Br. Nickel	441	735	Warm Bronze PVD	483
299	Matte Black	441	726	Warm Bronze Br. PVD	516
720	Nickel PVD	483	710	Brass PVD	483
706	Black Metal PVD	483	727	Brass Br. PVD	516
707	Black Metal Br. PVD	516	279	Matte White	441
030	Copper PVD	483			

59549

12" Shelf

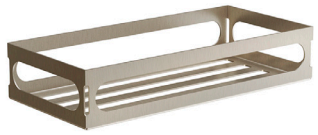

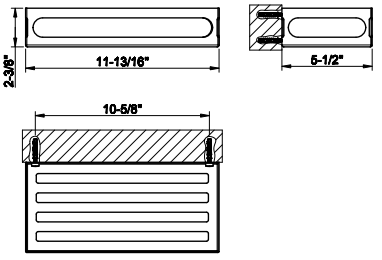

031	Chrome	796	726	Warm Bronze Br. PVD	1.259
149	Finox Br. Nickel	1.075	710	Brass PVD	1.179
299	Matte Black	1.075	727	Brass Br. PVD	1.259
720	Nickel PVD	1.179	246	Gold PVD	1.338
706	Black Metal PVD	1.179	716	Gold Br. PVD	1.338
707	Black Metal Br. PVD	1.259	187	Aged Bronze	1.259
030	Copper PVD	1.179	713	Antique Brass	1.259
708	Copper Br. PVD	1.259	279	Matte White	1.075
735	Warm Bronze PVD	1.179			

59561

Corner shelf



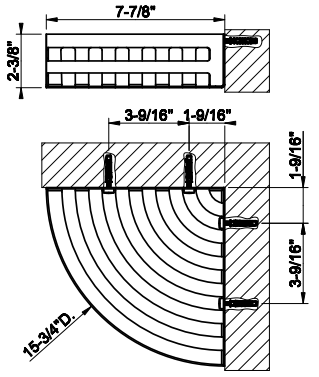

031	Chrome	631	726	Warm Bronze Br. PVD	995
149	Finox Br. Nickel	850	710	Brass PVD	932
299	Matte Black	850	727	Brass Br. PVD	995
720	Nickel PVD	932	246	Gold PVD	1.061
706	Black Metal PVD	932	716	Gold Br. PVD	1.061
707	Black Metal Br. PVD	995	187	Aged Bronze	995
030	Copper PVD	932	713	Antique Brass	995
708	Copper Br. PVD	995	279	Matte White	850
735	Warm Bronze PVD	932			

59521

Wall-mounted garment hook



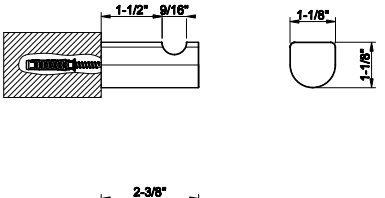

031	Chrome	145	708	Copper Br. PVD	229
149	Finox Br. Nickel	196	735	Warm Bronze PVD	214
299	Matte Black	196	726	Warm Bronze Br. PVD	229
720	Nickel PVD	214	710	Brass PVD	214
706	Black Metal PVD	214	727	Brass Br. PVD	229
707	Black Metal Br. PVD	229	279	Matte White	196
030	Copper PVD	214			

59522

Wall-mounted double garment hook



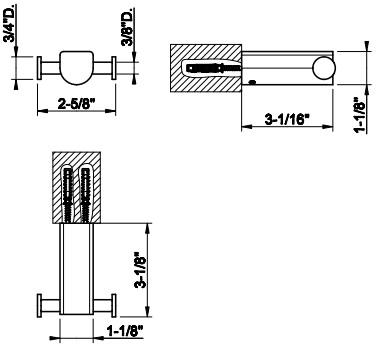

031	Chrome	221	708	Copper Br. PVD	350
149	Finox Br. Nickel	298	735	Warm Bronze PVD	328
299	Matte Black	298	726	Warm Bronze Br. PVD	350
720	Nickel PVD	328	710	Brass PVD	328
706	Black Metal PVD	328	727	Brass Br. PVD	350
707	Black Metal Br. PVD	350	279	Matte White	298
030	Copper PVD	328			

RILIEVO ACCESSORIES

59562

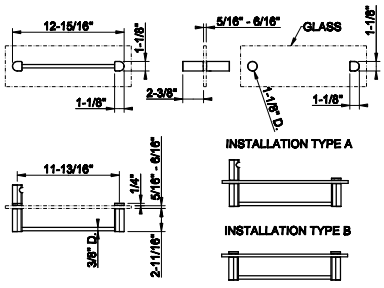

12” towel rail for glass fixing

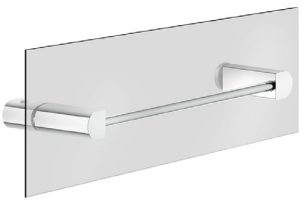

031	Chrome	571	708	Copper Br. PVD	903
149	Finox Br. Nickel	771	735	Warm Bronze PVD	846
299	Matte Black	771	726	Warm Bronze Br. PVD	903
720	Nickel PVD	846	710	Brass PVD	846
706	Black Metal PVD	846	727	Brass Br. PVD	903
707	Black Metal Br. PVD	903	279	Matte White	771
030	Copper PVD	846			

59564

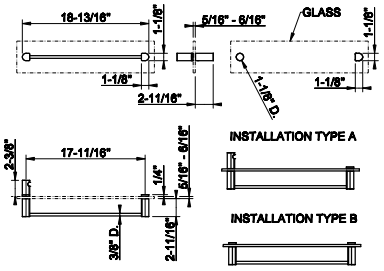

18” towel rail for glass fixing

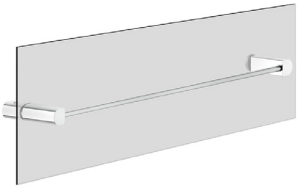

031	Chrome	593	708	Copper Br. PVD	937
149	Finox Br. Nickel	800	735	Warm Bronze PVD	878
299	Matte Black	800	726	Warm Bronze Br. PVD	937
720	Nickel PVD	878	710	Brass PVD	878
706	Black Metal PVD	878	727	Brass Br. PVD	937
707	Black Metal Br. PVD	937	279	Matte White	800
030	Copper PVD	878			

59566

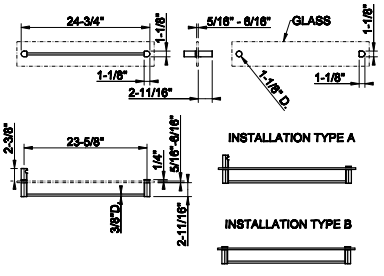

24” towel rail for glass fixing

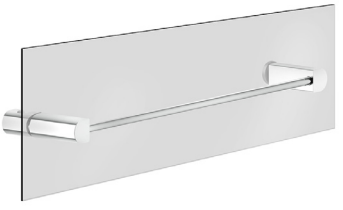

031	Chrome	611	708	Copper Br. PVD	965
149	Finox Br. Nickel	825	735	Warm Bronze PVD	904
299	Matte Black	825	726	Warm Bronze Br. PVD	965
720	Nickel PVD	904	710	Brass PVD	904
706	Black Metal PVD	904	727	Brass Br. PVD	965
707	Black Metal Br. PVD	965	279	Matte White	825
030	Copper PVD	904			

58424

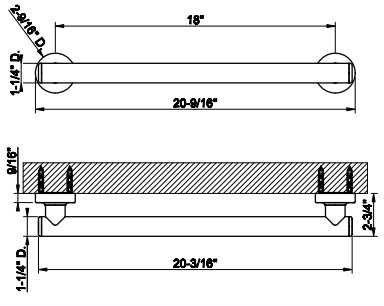

Safety grip-handle for bathtub and shower enclosure
• 18” length



031	Chrome	1.932	726	Warm Bronze Br. PVD	3.054
149	Finox Br. Nickel	2.611	710	Brass PVD	2.862
299	Matte Black	2.611	727	Brass Br. PVD	3.056
720	Nickel PVD	2.862	246	Gold PVD	3.243
706	Black Metal PVD	2.862	716	Gold Br. PVD	3.243
707	Black Metal Br. PVD	3.056	187	Aged Bronze	3.056
030	Copper PVD	2.862	713	Antique Brass	3.056
708	Copper Br. PVD	3.056	845	Dark Bronze	3.056
735	Warm Bronze PVD	2.862	279	Matte White	2.611

58430



Safety grip-handle for bathtub and shower enclosure
• 24” length

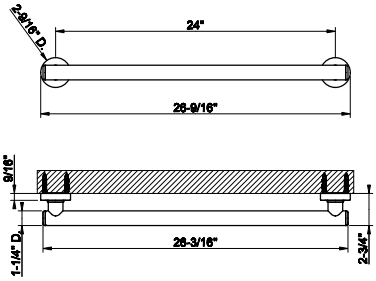

031	White Ceramic	1.967	726	Black Metal Br. PVD	3.108
149	White Ceramic	2.656	710	Copper PVD	2.911
299	Chrome	2.656	727	Copper Br. PVD	3.108
720	Chrome	2.911	246	Warm Bronze PVD	3.304
706	Finox Br. Nickel	2.911	716	Warm Bronze Br. PVD	3.304
707	Matte Black	3.108	187	Brass PVD	3.108
030	Chrome Br.	2.911	713	Brass Br. PVD	3.108
708	Nickel PVD	3.108	845	Gold PVD	3.108
735	Black Metal PVD	2.911	279	Gold Br. PVD	2.656

58432



Safety grip-handle for bathtub and shower enclosure
• 36” length

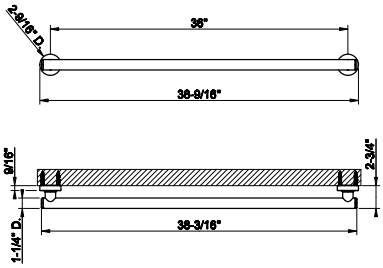

031	Aged Bronze	2.165	726	Black Metal PVD	3.419
149	Antique Brass	2.921	710	Black Metal Br. PVD	3.203
299	Matte White	2.921	727	Copper PVD	3.419
720	White Ceramic	3.203	246	Copper Br. PVD	3.637
706	Chrome	3.203	716	Warm Bronze PVD	3.637
707	Finox Br. Nickel	3.419	187	Warm Bronze Br. PVD	3.419
030	Matte Black	3.203	713	Brass PVD	3.419
708	Chrome Br.	3.419	845	Brass Br. PVD	3.419
735	Nickel PVD	3.203	279	Gold PVD	2.921

GESSI



RILIEVO
TOTAL LOOK

54611



Flush Actuator Plate
•Stainless steel
•Compatible with GEBERIT models: 111.597.001, 111.902.005, 111.798.00.1, 111.335.00.5
•Without visible fixing system

031	Chrome	1.228	708	Copper Br. PVD	1.813
239	Steel Br.	1.228	735	Warm Bronze PVD	1.813
275	Matte Cipria	1.653	726	Warm Bronze Br. PVD	1.813
273	Matte Greige	1.653	710	Brass PVD	1.813
280	Matte Ocra	1.653	727	Brass Br. PVD	1.813
281	Matte Coral	1.653	246	Gold PVD	2.058
276	Matte Agave	1.653	716	Gold Br. PVD	2.058
299	Matte Black	1.653	187	Aged Bronze	1.813
720	Nickel PVD	1.813	713	Antique Brass	1.813
706	Black Metal PVD	1.813	845	Dark Bronze	1.813
707	Black Metal Br. PVD	1.813	279	Matte White	1.653
030	Copper PVD	1.813			

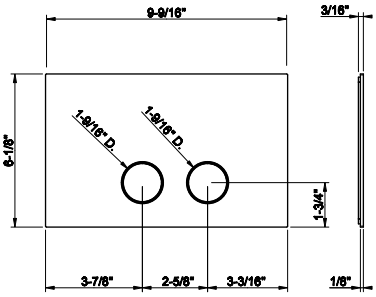

54601



Counter washbasin In stainless steel, without overflow waste. Without basin waste. It can be combined with waste 54597.

239	Matte White	2.449	726	White Ceramic	6.986
708	White Ceramic	6.986	707	Chrome	6.986
707	White Ceramic	6.986	299	White Ceramic	4.431

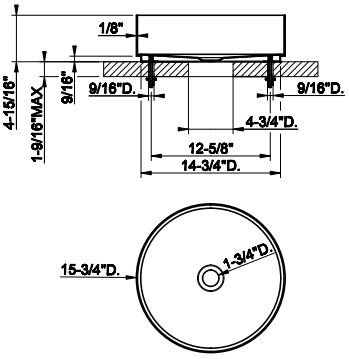

54597



1 1/4" push drain with or without overflow feature
- Recommended for Gessi 316 Collection

239	Steel Br.	212	708	Copper Br. PVD	313
299	Matte Black	287	726	Warm Bronze Br. PVD	313
707	Black Metal Br. PVD	313	727	Brass Br. PVD	313

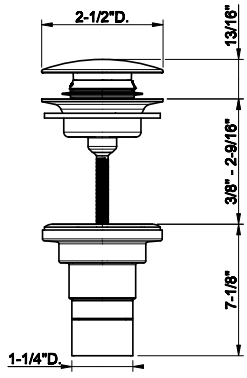

01427



1 1/4" push drain with or without overflow feature

031	Chrome	134	030	Copper PVD	379
239	Steel Br.	134	708	Copper Br. PVD	379
275	Matte Cipria	326	735	Warm Bronze PVD	379
273	Matte Greige	326	726	Warm Bronze Br. PVD	379
277	Glossy Ocra	326	710	Brass PVD	379
278	Glossy Coral	326	727	Brass Br. PVD	379
276	Matte Agave	326	246	Gold PVD	405
299	Matte Black	386	716	Gold Br. PVD	405
720	Nickel PVD	379	187	Aged Bronze	379
706	Black Metal PVD	379	713	Antique Brass	379
707	Black Metal Br. PVD	379	845	Dark Bronze	379

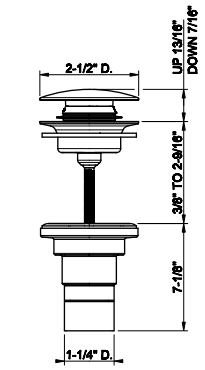



HEADSHOWER SECTION

33095



Wall-fixing headshower.
- 1/2” connections
- Projection from the wall to center15-1/2”
- Total projection 21-5/8”
- Max flow rate1.75 GPM

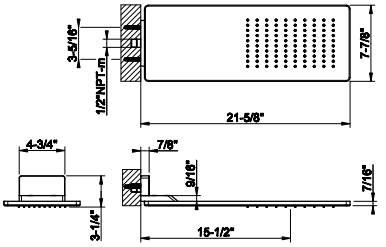

238	Mirror Steel	4.784	708	Copper Br. PVD	7.559
239	Steel Br.	4.784	707	Black Metal Br. PVD	7.559
030	Copper PVD	7.081	720	Nickel PVD	7.081
706	Black Metal PVD	7.081	299	Matte Black	6.459

66150



Wall-mounted anti limestone and adjustable head shower
- Max flow rate 1,75 GPM
- 12-5/8” D.
- Length 14-13/16”
- 1/2” connections

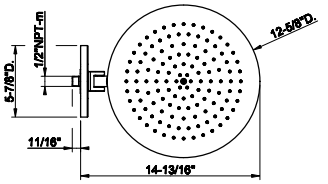

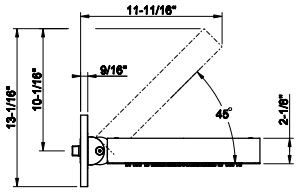

031	Chrome	2.874	710	Brass PVD	4.254
149	Finox Br. Nickel	3.882	727	Brass Br. PVD	4.542
706	Black Metal PVD	4.254	720	Nickel PVD	4.254
708	Copper Br. PVD	4.542	279	Matte White	3.882
707	Black Metal Br. PVD	4.542	299	Matte Black	3.882
735	Warm Bronze PVD	4.254	845	Dark Bronze	4.542
726	Warm Bronze Br. PVD	4.542			

66148



Wall-mounted adjustable shower head with arm.
- 1/2” connections.
- Projection from wall to center 15-1/2”
- Total projection 20-3/8”
- Max flow rate 1.75 GPM

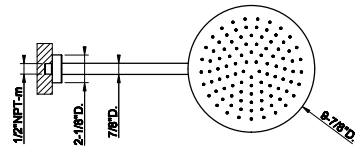

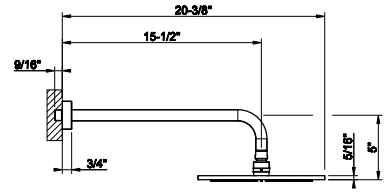

031	Chrome	1.168	726	Warm Bronze Br. PVD	1.845
149	Finox Br. Nickel	1.578	727	Brass Br. PVD	1.845
706	Black Metal PVD	1.730	720	Nickel PVD	1.730
708	Copper Br. PVD	1.845	299	Matte Black	1.578
707	Black Metal Br. PVD	1.845	845	Dark Bronze	1.845
735	Warm Bronze PVD	1.730			

58148



Wall-mounted adjustable shower head with arm.
- 1/2” connections.
- Projection from wall to center 15-1/2”
- Total projection 19-7/16”
- Max flow rate 1.75 GPM

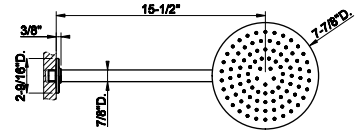

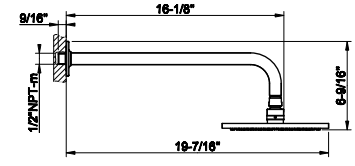

031	Chrome	1.783	735	Warm Bronze PVD	2.640
149	Finox Br. Nickel	2.407	726	Warm Bronze Br. PVD	2.818
187	Aged Bronze	2.818	710	Brass PVD	2.640
713	Antique Brass	2.818	727	Brass Br. PVD	2.818
030	Copper PVD	2.640	246	Gold PVD	2.995
706	Black Metal PVD	2.640	720	Nickel PVD	2.640
708	Copper Br. PVD	2.818	299	Matte Black	2.407
707	Black Metal Br. PVD	2.818	845	Dark Bronze	2.818

HEADSHOWER SECTION

58248

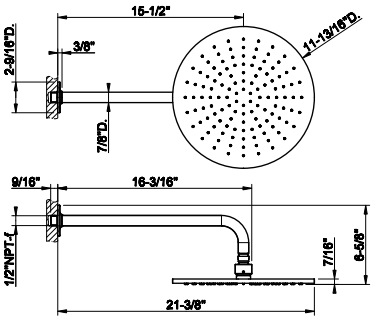

Wall-mounted adjustable shower head with arm.
- 1/2” connections.
- Projection from wall to center 15-1/2”
- Total projection 21-3/8”
- Max flow rate 1.75 GPM



031	Chrome	2.858	735	Warm Bronze PVD	4.229
149	Finox Br. Nickel	3.858	726	Warm Bronze Br. PVD	4.515
187	Aged Bronze	4.515	710	Brass PVD	4.229
713	Antique Brass	4.515	727	Brass Br. PVD	4.515
030	Copper PVD	4.229	246	Gold PVD	4.801
706	Black Metal PVD	4.229	720	Nickel PVD	4.229
708	Copper Br. PVD	4.515	299	Matte Black	3.858
707	Black Metal Br. PVD	4.515	845	Dark Bronze	4.515

59148

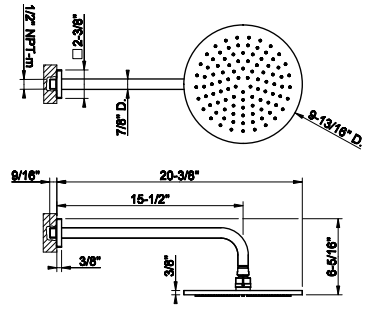

Wall-mounted adjustable shower head with arm.
- 1/2” connections.
- Projection from wall to center 15-1/2”
- Total projection 20-3/8”
- Max flow rate 1.75 GPM



031	Chrome	1.176	726	Warm Bronze Br. PVD	1.855
149	Finox Br. Nickel	1.585	710	Brass PVD	1.738
030	Copper PVD	1.738	727	Brass Br. PVD	1.855
706	Black Metal PVD	1.738	720	Nickel PVD	1.738
708	Copper Br. PVD	1.855	279	Matte White	1.585
707	Black Metal Br. PVD	1.855	299	Matte Black	1.585
735	Warm Bronze PVD	1.738			

39349

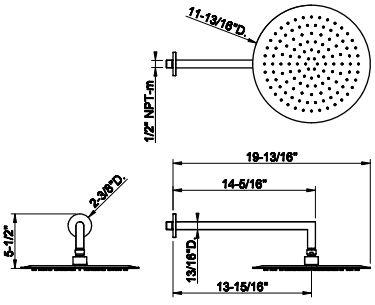

Wall-mounted adjustable shower head with arm
- 1/2” connections
- Projection from wall to center 13-15/16”
- Total projection 19-13/16”
- Diameter 11-13/16”
- Max flow rate 1.75 GPM

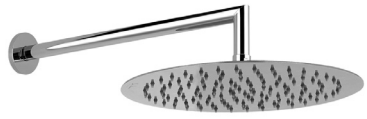

238	Mirror Steel	1.815	239	Steel Br.	1.815

47284

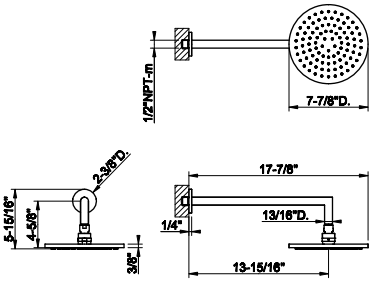

Wall-mounted adjustable shower head with arm
- 1/2” connections
- Projection from wall to center 13-15/16”
- Total projection 17-7/8”
- Diameter 7-7/8”
- Max flow rate 1.75 GPM



031	Chrome	878	299	Matte Black	1.185
149	Finox Br. Nickel	1.185			

63348



Wall-mounted adjustable shower head with arm.
- 1/2” connections.
- Projection from wall to center 13-7/8”
- Total projection 18-3/4”
- Max flow rate 1.75 GPM

031	Chrome	1.087	707	Black Metal Br. PVD	1.715
149	Finox Br. Nickel	1.466	735	Warm Bronze PVD	1.605
187	Aged Bronze	1.715	726	Warm Bronze Br. PVD	1.715
713	Antique Brass	1.715	710	Brass PVD	1.605
030	Copper PVD	1.605	727	Brass Br. PVD	1.715
706	Black Metal PVD	1.605	720	Nickel PVD	1.605
708	Copper Br. PVD	1.715	299	Matte Black	1.466

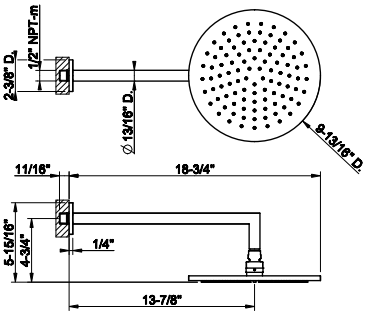

58185



Wall-mounted adjustable shower head with arm.
- 1/2” connections.
- Projection from wall to center 15-1/2”
- Total projection 19-3/4”
- Max flow rate 1.75 GPM

031	Chrome	2.604	735	Warm Bronze PVD	3.853
149	Finox Br. Nickel	3.514	726	Warm Bronze Br. PVD	4.113
187	Aged Bronze	4.113	710	Brass PVD	3.853
713	Antique Brass	4.113	727	Brass Br. PVD	4.113
030	Copper PVD	3.853	246	Gold PVD	4.374
706	Black Metal PVD	3.853	720	Nickel PVD	3.853
708	Copper Br. PVD	4.113	299	Matte Black	3.514
707	Black Metal Br. PVD	4.113	845	Dark Bronze	4.113

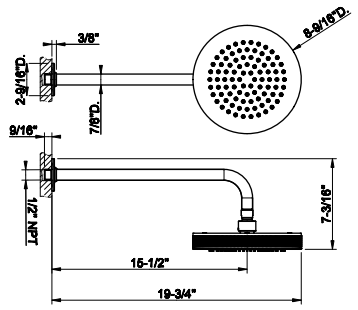

65148



Wall-mounted adjustable shower head with arm.
- 1/2” connections.
- Projection from wall to center 15-5/16”
- Total projection 19-13/16”
- Max flow rate 1.75 GPM

031	Chrome	2.535	707	Black Metal Br. PVD	4.005
149	Finox Br. Nickel	3.423	735	Warm Bronze PVD	3.753
187	Aged Bronze	4.005	726	Warm Bronze Br. PVD	4.005
713	Antique Brass	4.005	710	Brass PVD	3.753
030	Copper PVD	3.753	727	Brass Br. PVD	4.005
706	Black Metal PVD	3.753	720	Nickel PVD	3.753
708	Copper Br. PVD	4.005	299	Matte Black	3.423

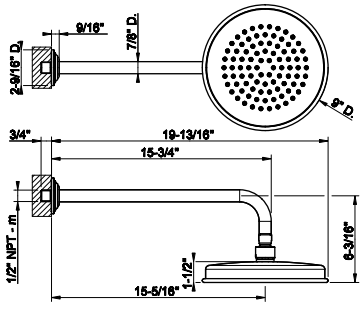

65149



Wall-mounted adjustable shower head with arm.
- 1/2” connections.
- Projection from wall to center 15-5/16”
- Total projection 21-3/4”
- Max flow rate 1.75 GPM

031	Chrome	3.802	707	Black Metal Br. PVD	6.007
149	Finox Br. Nickel	5.132	735	Warm Bronze PVD	5.625
187	Aged Bronze	6.007	726	Warm Bronze Br. PVD	6.007
713	Antique Brass	6.007	710	Brass PVD	5.625
030	Copper PVD	5.625	727	Brass Br. PVD	6.007
706	Black Metal PVD	5.625	720	Nickel PVD	5.625
708	Copper Br. PVD	6.007	299	Matte Black	5.132

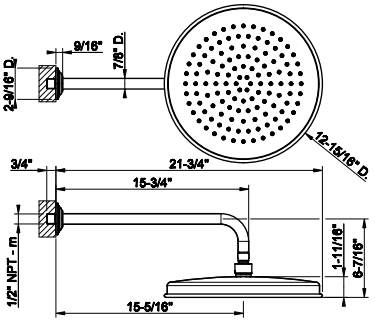

HEADSHOWER SECTION

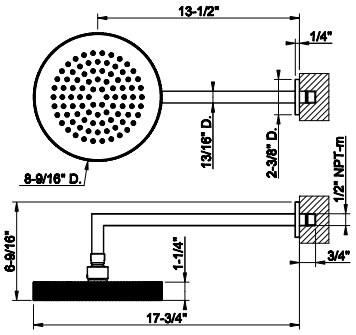

63448

Wall-mounted adjustable shower head with arm DIAMANTATO.
- 1/2” connections.
- Projection from wall to center 13-1/2”
- Total projection 17-3/4”
- Max flow rate 1.75 GPM



031	Chrome	2.488	707	Black Metal Br. PVD	3.931
149	Finox Br. Nickel	3.361	735	Warm Bronze PVD	3.685
187	Aged Bronze	3.931	726	Warm Bronze Br. PVD	3.931
713	Antique Brass	3.931	710	Brass PVD	3.685
030	Copper PVD	3.685	727	Brass Br. PVD	3.931
706	Black Metal PVD	3.685	720	Nickel PVD	3.685
708	Copper Br. PVD	3.931	299	Matte Black	3.361

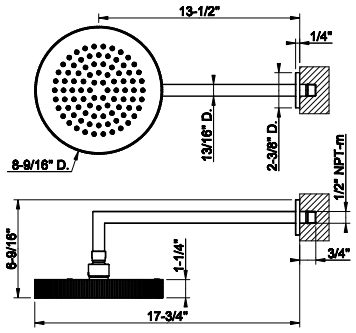

63548

Wall-mounted adjustable shower head with arm RIGATO.
- 1/2” connections.
- Projection from wall to center 13-1/2”
- Total projection 17-3/4”
- Max flow rate 1.75 GPM



031	Chrome	2.488	707	Black Metal Br. PVD	3.931
149	Finox Br. Nickel	3.361	735	Warm Bronze PVD	3.685
187	Aged Bronze	3.931	726	Warm Bronze Br. PVD	3.931
713	Antique Brass	3.931	710	Brass PVD	3.685
030	Copper PVD	3.685	727	Brass Br. PVD	3.931
706	Black Metal PVD	3.685	720	Nickel PVD	3.685
708	Copper Br. PVD	3.931	299	Matte Black	3.361

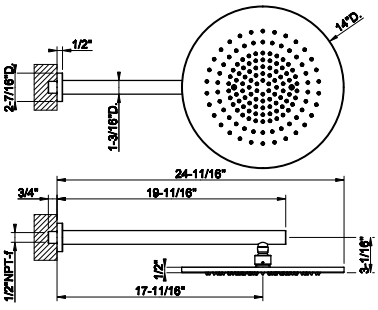

54148

Wall-mounted adjustable shower head with arm
- 1/2” connections
- Projection from wall to center 17-11/16”
- Total projection 24-11/16”
- Max flow rate 1.75 GPM



239	Steel Br.	3.586	726	Warm Bronze Br. PVD	5.308
708	Copper Br. PVD	5.308	727	Brass Br. PVD	5.308
707	Black Metal Br. PVD	5.308	299	Matte Black	4.842

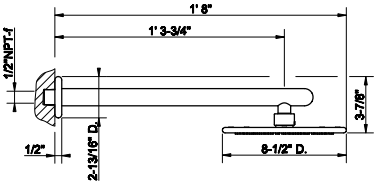

33755

Wall-mounted shower head
- 1/2” connections
- Projection from wall to center 15-3/4”
- Total projection 20”
- Max flow rate 1.75GPM



031	Chrome	1.714	126	Black Metal Br. GHRC	2.228
123	Copper GHRC	2.058	279	Matte White	2.314
124	Black Metal GHRC	2.058	299	Matte Black	2.314
125	Copper Br. GHRC	2.228			

59158



Wall-mounted adjustable shower head with arm.
- 1/2" connections.
- Projection from wall to center 15-1/2"
- Total projection 20-3/8"
- Max flow rate 1.75 GPM

031	Chrome	1.274	726	Warm Bronze Br. PVD	2.011
149	Finox Br. Nickel	1.719	710	Brass PVD	1.884
030	Copper PVD	1.884	727	Brass Br. PVD	2.011
706	Black Metal PVD	1.884	720	Nickel PVD	1.884
708	Copper Br. PVD	2.011	279	Matte White	1.719
707	Black Metal Br. PVD	2.011	299	Matte Black	1.719
735	Warm Bronze PVD	1.884			

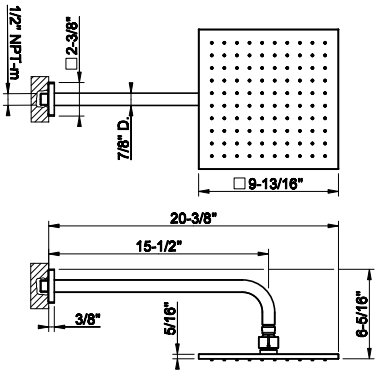

47286



Wall-mounted adjustable shower head with arm
- 1/2" connections
- Projection from wall to center 13-15/16"
- Total projection 17-7/8"
- Square 7-7/8"
- Max flow rate 1.75 GPM

031	Chrome	878	299	Matte Black	1.185
149	Finox Br. Nickel	1.185			

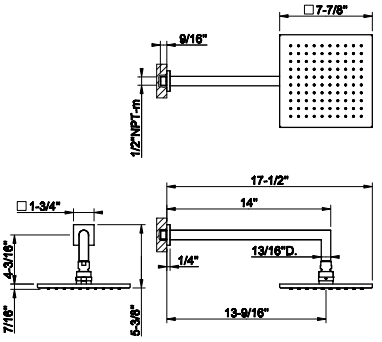

26648



Wall-mounted adjustable shower head with arm
- 1/2" connections
- Projection from wall to center 13"
- Total projection 17-1/4"
- Max flow rate 1.75 GPM

031	Chrome	2.197	735	Warm Bronze PVD	3.253
149	Finox Br. Nickel	2.966	726	Warm Bronze Br. PVD	3.471
187	Aged Bronze	3.471	710	Brass PVD	3.253
713	Antique Brass	3.471	727	Brass Br. PVD	3.471
030	Copper PVD	3.253	720	Nickel PVD	3.253
706	Black Metal PVD	3.253	299	Matte Black	2.966
708	Copper Br. PVD	3.471	845	Dark Bronze	3.471
707	Black Metal Br. PVD	3.471			

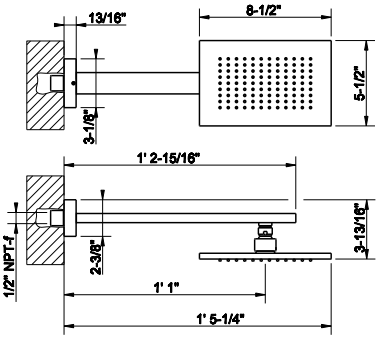

66156



Wall-mounted adjustable shower head with arm.
- 1/2" connections.
- Projection from wall to center 9-7/16"
- Total projection 11-1/16"
- Max flow rate 1.75 GPM

031	Chrome	1.554	735	Warm Bronze PVD	2.300
149	Finox Br. Nickel	2.098	726	Warm Bronze Br. PVD	2.456
187	Aged Bronze	2.456	710	Brass PVD	2.300
713	Antique Brass	2.456	727	Brass Br. PVD	2.456
030	Copper PVD	2.300	246	Gold PVD	2.611
706	Black Metal PVD	2.300	720	Nickel PVD	2.300
708	Copper Br. PVD	2.456	299	Matte Black	2.098
707	Black Metal Br. PVD	2.456	845	Dark Bronze	2.456

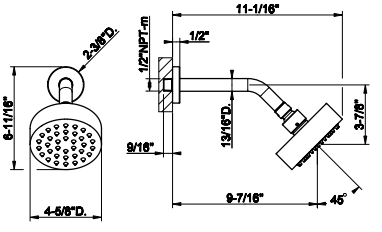

HEADSHOWER SECTION

66158

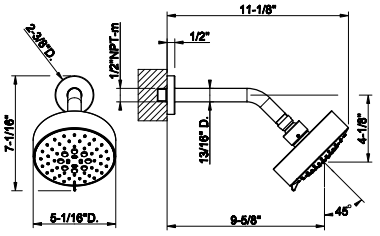

Wall-mounted adjustable multi-function shower head with arm:
•1/2" connections
•Projection from wall to center 9-5/8"
•Total projection 11-1/8"
•Max flow rate 1.75 gpm



031	Chrome	1.907	735	Warm Bronze PVD	2.823
149	Finox Br. Nickel	2.575	726	Warm Bronze Br. PVD	3.013
187	Aged Bronze	3.013	710	Brass PVD	2.823
713	Antique Brass	3.013	727	Brass Br. PVD	3.013
030	Copper PVD	2.823	246	Gold PVD	3.204
706	Black Metal PVD	2.823	720	Nickel PVD	2.823
708	Copper Br. PVD	3.013	299	Matte Black	2.575
707	Black Metal Br. PVD	3.013	845	Dark Bronze	3.013

58189

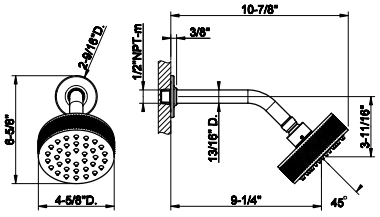

Wall-mounted adjustable shower head with arm.
• 1/2" connections.
• Projection from wall to center 9-1/4"
• Total projection 10-7/8"
• Max flow rate 1.75 GPM



031	Chrome	1.759	735	Warm Bronze PVD	2.604
149	Finox Br. Nickel	2.375	726	Warm Bronze Br. PVD	2.779
187	Aged Bronze	2.779	710	Brass PVD	2.604
713	Antique Brass	2.779	727	Brass Br. PVD	2.779
030	Copper PVD	2.604	246	Gold PVD	2.955
706	Black Metal PVD	2.604	720	Nickel PVD	2.604
708	Copper Br. PVD	2.779	299	Matte Black	2.375
707	Black Metal Br. PVD	2.779	845	Dark Bronze	2.779

65156

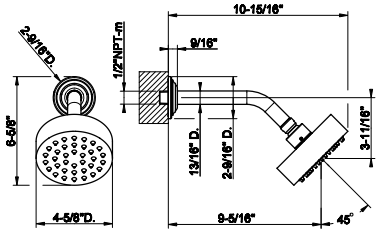

Wall-mounted adjustable shower head with arm:
•1/2" connections
•Projection from wall to center 9-5/16"
•Total projection 10-15/16"
•Max flow rate 1.75 gpm



031	Chrome	1.759	707	Black Metal Br. PVD	2.779
149	Finox Br. Nickel	2.375	735	Warm Bronze PVD	2.604
187	Aged Bronze	2.779	726	Warm Bronze Br. PVD	2.779
713	Antique Brass	2.779	710	Brass PVD	2.604
030	Copper PVD	2.604	727	Brass Br. PVD	2.779
706	Black Metal PVD	2.604	720	Nickel PVD	2.604
708	Copper Br. PVD	2.779	299	Matte Black	2.375

65158

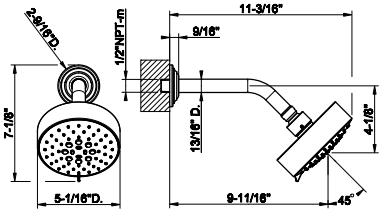

Wall-mounted adjustable multi-function shower head with arm:
•1/2" connections
•Projection from wall to center 9-11/16"
•Total projection 11-3/16"
•Max flow rate 1.75 gpm



031	Chrome	2.111	707	Black Metal Br. PVD	3.334
149	Finox Br. Nickel	2.850	735	Warm Bronze PVD	3.124
187	Aged Bronze	3.334	726	Warm Bronze Br. PVD	3.334
713	Antique Brass	3.334	710	Brass PVD	3.124
030	Copper PVD	3.124	727	Brass Br. PVD	3.334
706	Black Metal PVD	3.124	720	Nickel PVD	3.124
708	Copper Br. PVD	3.334	299	Matte Black	2.850

63354



Wall-mounted adjustable shower head with arm DIAMANTATO.
•1/2" connections
•Projection from wall to center 9-5/16"
•Total projection 10-15/16"
• Max flow rate 1.75 gpm

031	Chrome	1.759	707	Black Metal Br. PVD	2.779
149	Finox Br. Nickel	2.375	735	Warm Bronze PVD	2.604
187	Aged Bronze	2.779	726	Warm Bronze Br. PVD	2.779
713	Antique Brass	2.779	710	Brass PVD	2.604
030	Copper PVD	2.604	727	Brass Br. PVD	2.779
706	Black Metal PVD	2.604	720	Nickel PVD	2.604
708	Copper Br. PVD	2.779	299	Matte Black	2.375

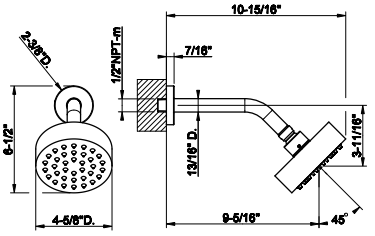

63356



Wall-mounted adjustable multi-function shower head with arm DIAMANTATO.
•1/2" connections
•Projection from wall to center 9-11/16"
•Total projection 11-3/16"
•Max flow rate 1.75 gpm

031	Chrome	2.111	707	Black Metal Br. PVD	3.334
149	Finox Br. Nickel	2.850	735	Warm Bronze PVD	3.124
187	Aged Bronze	3.334	726	Warm Bronze Br. PVD	3.334
713	Antique Brass	3.334	710	Brass PVD	3.124
030	Copper PVD	3.124	727	Brass Br. PVD	3.334
706	Black Metal PVD	3.124	720	Nickel PVD	3.124
708	Copper Br. PVD	3.334	299	Matte Black	2.850

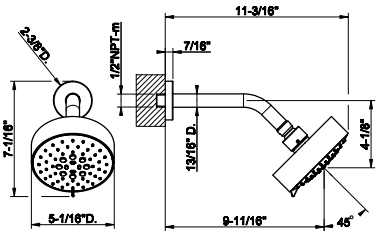

63554



Wall-mounted anti-limescale showerhead. RIGATO
• 1/2" connections
• Projection from wall to center 9-5/16"
• Total projection 10-15/16"
• Max flow rate 1.75 GPM

031	Chrome	1.759	707	Black Metal Br. PVD	2.779
149	Finox Br. Nickel	2.375	735	Warm Bronze PVD	2.604
187	Aged Bronze	2.779	726	Warm Bronze Br. PVD	2.779
713	Antique Brass	2.779	710	Brass PVD	2.604
030	Copper PVD	2.604	727	Brass Br. PVD	2.779
706	Black Metal PVD	2.604	720	Nickel PVD	2.604
708	Copper Br. PVD	2.779	299	Matte Black	2.375

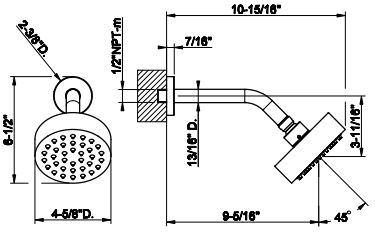

63556



Multifunctional adjustable wall-mounted anti-limescale showerhead. RIGATO
• 1/2" connections
• Projection from wall to center 9-11/16"
• Total projection 11-3/16"
• Max flow rate 1.75 GPM

031	Chrome	2.111	707	Black Metal Br. PVD	3.334
149	Finox Br. Nickel	2.850	735	Warm Bronze PVD	3.124
187	Aged Bronze	3.334	726	Warm Bronze Br. PVD	3.334
713	Antique Brass	3.334	710	Brass PVD	3.124
030	Copper PVD	3.124	727	Brass Br. PVD	3.334
706	Black Metal PVD	3.124	720	Nickel PVD	3.124
708	Copper Br. PVD	3.334	299	Matte Black	2.850

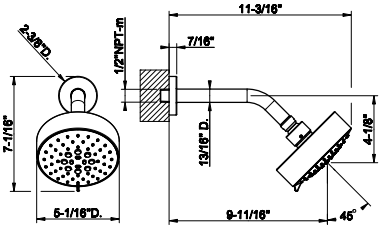

HEADSHOWER SECTION

58181

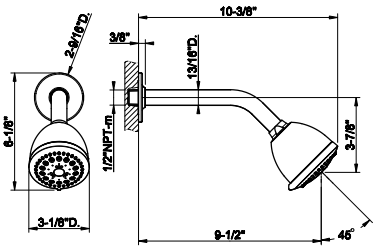

Wall-mounted adjustable multi-function shower head with arm
- 1/2" connections
- Projection from wall to center 9-1/2"
- Total projection 10-3/8"
- Max flow rate 1.75 GPM



031	Chrome	943	735	Warm Bronze PVD	1.397
149	Finox Br. Nickel	1.275	726	Warm Bronze Br. PVD	1.491
187	Aged Bronze	1.491	710	Brass PVD	1.397
713	Antique Brass	1.491	727	Brass Br. PVD	1.491
030	Copper PVD	1.397	246	Gold PVD	1.585
706	Black Metal PVD	1.397	720	Nickel PVD	1.397
708	Copper Br. PVD	1.491	299	Matte Black	1.275
707	Black Metal Br. PVD	1.491	845	Dark Bronze	1.491

58180

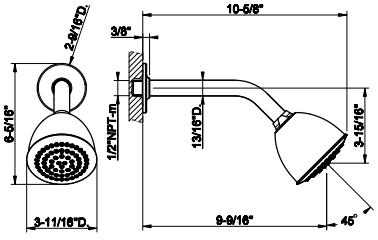

Wall-mounted adjustable shower head with arm
- 1/2" connections
- Projection from wall to center 9-9/16"
- Total projection 10-5/8"
- Max flow rate 1.75 GPM



031	Chrome	822	735	Warm Bronze PVD	1.216
149	Finox Br. Nickel	1.110	726	Warm Bronze Br. PVD	1.299
187	Aged Bronze	1.299	710	Brass PVD	1.216
713	Antique Brass	1.299	727	Brass Br. PVD	1.299
030	Copper PVD	1.216	246	Gold PVD	1.379
706	Black Metal PVD	1.216	720	Nickel PVD	1.216
708	Copper Br. PVD	1.299	299	Matte Black	1.110
707	Black Metal Br. PVD	1.299	845	Dark Bronze	1.299

38763

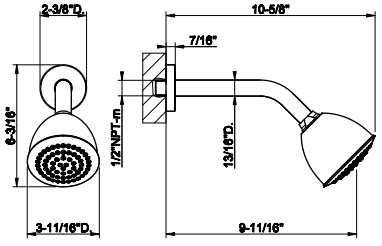

Wall-mounted adjustable shower head with arm
- 1/2" connections
- Projection from wall to center 9-11/16"
- Total projection 10-5/8"
- Max flow rate 1.75 GPM



031	Chrome	619	299	Matte Black	837
149	Finox Br. Nickel	837			

38765

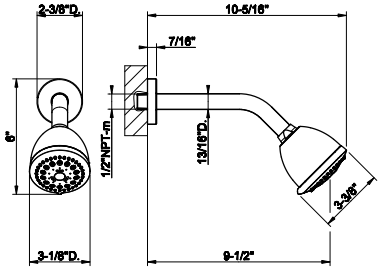

Wall-mounted adjustable multi-function shower head with arm
- 1/2" connections
- Projection from wall to center 9-1/2"
- Total projection 10-5/16"
- Max flow rate 1.75 GPM



031	Chrome	742	299	Matte Black	1.002
149	Finox Br. Nickel	1.002			



58152

Ceiling-mounted adjustable shower head with arm.
- 1/2" connections.
- Projection from ceiling 10-3/8"
- Max flow rate 1.75 GPM

031	Chrome	1.642	735	Warm Bronze PVD	2.428
149	Finox Br. Nickel	2.215	726	Warm Bronze Br. PVD	2.591
187	Aged Bronze	2.591	710	Brass PVD	2.428
713	Antique Brass	2.591	727	Brass Br. PVD	2.591
030	Copper PVD	2.428	246	Gold PVD	2.756
706	Black Metal PVD	2.428	720	Nickel PVD	2.428
708	Copper Br. PVD	2.591	299	Matte Black	2.215
707	Black Metal Br. PVD	2.591	845	Dark Bronze	2.591

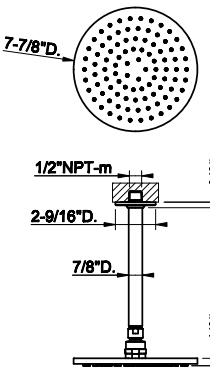



58252

Ceiling-mounted adjustable shower head with arm.
- 1/2" connections.
- Projection from ceiling 10-7/16"
- Max flow rate 1.75 GPM

031	Chrome	2.736	735	Warm Bronze PVD	4.048
149	Finox Br. Nickel	3.694	726	Warm Bronze Br. PVD	4.323
187	Aged Bronze	4.323	710	Brass PVD	4.048
713	Antique Brass	4.323	727	Brass Br. PVD	4.323
030	Copper PVD	4.048	246	Gold PVD	4.597
706	Black Metal PVD	4.048	720	Nickel PVD	4.048
708	Copper Br. PVD	4.323	299	Matte Black	3.694
707	Black Metal Br. PVD	4.323	845	Dark Bronze	4.323

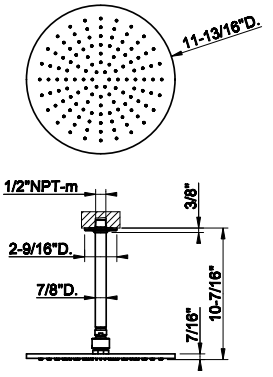



54152

Ceiling-mounted adjustable shower head with arm
- 1/2" connections
- Projection from ceiling 10-3/4"
- Max flow rate 1.75 GPM

239	Steel Br.	3.151	726	Warm Bronze Br. PVD	4.665
708	Copper Br. PVD	4.665	727	Brass Br. PVD	4.665
707	Black Metal Br. PVD	4.665	299	Matte Black	4.255

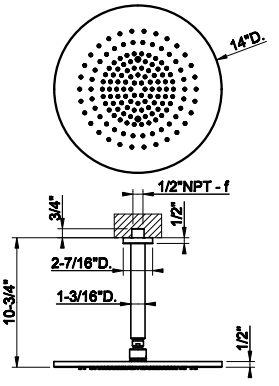



59152

Ceiling-mounted adjustable shower head with arm.
- 1/2" connections.
- Projection from ceiling 10-5/16"
- Max flow rate 1.75 GPM

031	Chrome	1.047	726	Warm Bronze Br. PVD	1.654
149	Finox Br. Nickel	1.413	710	Brass PVD	1.550
030	Copper PVD	1.550	727	Brass Br. PVD	1.654
706	Black Metal PVD	1.550	720	Nickel PVD	1.550
708	Copper Br. PVD	1.654	279	Matte White	1.413
707	Black Metal Br. PVD	1.654	299	Matte Black	1.413
735	Warm Bronze PVD	1.550			

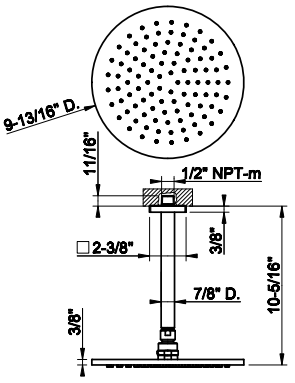

HEADSHOWER SECTION

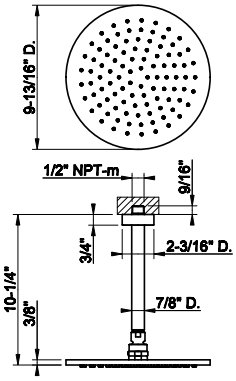

63352

Ceiling-mounted adjustable shower head with arm.
- 1/2" connections.
- Projection from ceiling 10-1/4"
- Max flow rate 1.75 GPM

031	Chrome	966	707	Black Metal Br. PVD	1.528
149	Finox Br. Nickel	1.306	735	Warm Bronze PVD	1.431
187	Aged Bronze	1.528	726	Warm Bronze Br. PVD	1.528
713	Antique Brass	1.528	710	Brass PVD	1.431
030	Copper PVD	1.431	727	Brass Br. PVD	1.528
706	Black Metal PVD	1.431	720	Nickel PVD	1.431
708	Copper Br. PVD	1.528	299	Matte Black	1.306



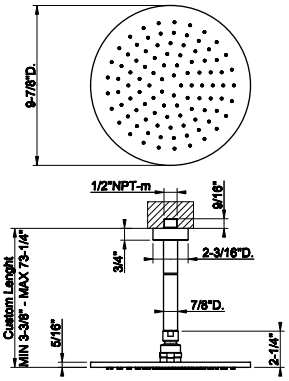

63350

Ceiling-mounted, shower head with arm, custom length
- 1/2" connections
- Projection from ceiling MIN 3-3/8" MAX 73-1/4"
- Max flow rate 1.75 GPM

031	Chrome	1.387	726	Warm Bronze Br. PVD	2.190
149	Finox Br. Nickel	1.870	710	Brass PVD	2.052
187	Aged Bronze	2.190	727	Brass Br. PVD	2.190
713	Antique Brass	2.190	246	Gold PVD	2.333
030	Copper PVD	2.052	720	Nickel PVD	2.052
706	Black Metal PVD	2.052	279	Matte White	1.870
708	Copper Br. PVD	2.190	299	Matte Black	1.870
707	Black Metal Br. PVD	2.190	845	Dark Bronze	2.190
735	Warm Bronze PVD	2.052			



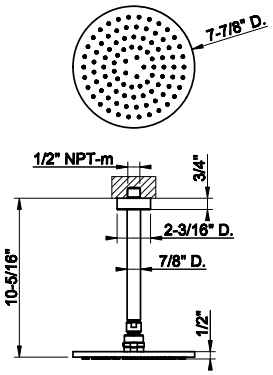

47288

Ceiling-mounted adjustable shower head with arm
- 1/2" connections
- Projection from ceiling 10-5/16"
- Diameter 7-7/8"
- Max flow rate 1.75 GPM

031	Chrome	792	299	Matte Black	1.069
149	Finox Br. Nickel	1.069			



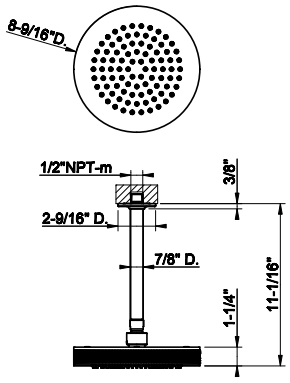

58186

Ceiling-mounted shower head
- 1/2" connections
- Projection from ceiling 11-1/16"
- Max flow rate 1.75 GPM

031	Chrome	2.459	735	Warm Bronze PVD	3.641
149	Finox Br. Nickel	3.322	726	Warm Bronze Br. PVD	3.885
187	Aged Bronze	3.885	710	Brass PVD	3.641
713	Antique Brass	3.885	727	Brass Br. PVD	3.885
030	Copper PVD	3.641	246	Gold PVD	4.132
706	Black Metal PVD	3.641	720	Nickel PVD	3.641
708	Copper Br. PVD	3.885	299	Matte Black	3.322
707	Black Metal Br. PVD	3.885	845	Dark Bronze	3.885





65152

Ceiling-mounted adjustable shower head with arm.
- 1/2" connections.
- Projection from ceiling 11-3/8"
- Max flow rate 1.75 GPM

031	Chrome	2.407	707	Black Metal Br. PVD	3.802
149	Finox Br. Nickel	3.249	735	Warm Bronze PVD	3.562
187	Aged Bronze	3.802	726	Warm Bronze Br. PVD	3.802
713	Antique Brass	3.802	710	Brass PVD	3.562
030	Copper PVD	3.562	727	Brass Br. PVD	3.802
706	Black Metal PVD	3.562	720	Nickel PVD	3.562
708	Copper Br. PVD	3.802	299	Matte Black	3.249

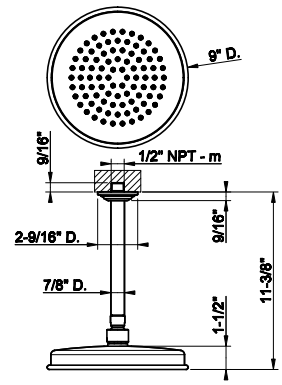



65153

Ceiling-mounted adjustable shower head with arm.
- 1/2" connections.
- Projection from ceiling 11-9/16"
- Max flow rate 1.75 GPM

031	Chrome	3.609	707	Black Metal Br. PVD	5.702
149	Finox Br. Nickel	4.872	735	Warm Bronze PVD	5.343
187	Aged Bronze	5.702	726	Warm Bronze Br. PVD	5.702
713	Antique Brass	5.702	710	Brass PVD	5.343
030	Copper PVD	5.343	727	Brass Br. PVD	5.702
706	Black Metal PVD	5.343	720	Nickel PVD	5.343
708	Copper Br. PVD	5.702	299	Matte Black	4.872

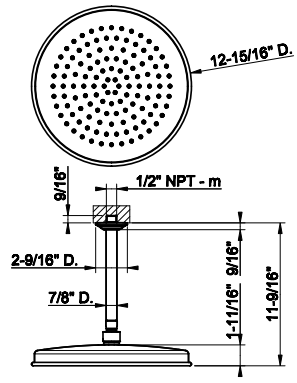



63452

Ceiling -mounted shower head with arm DIAMANTATO.
- 1/2" connections.
- Projection from ceiling 11-1/16"
- Max flow rate 1.75 GPM

031	Chrome	2.363	707	Black Metal Br. PVD	3.732
149	Finox Br. Nickel	3.188	735	Warm Bronze PVD	3.495
187	Aged Bronze	3.732	726	Warm Bronze Br. PVD	3.732
713	Antique Brass	3.732	710	Brass PVD	3.495
030	Copper PVD	3.495	727	Brass Br. PVD	3.732
706	Black Metal PVD	3.495	720	Nickel PVD	3.495
708	Copper Br. PVD	3.732	299	Matte Black	3.188

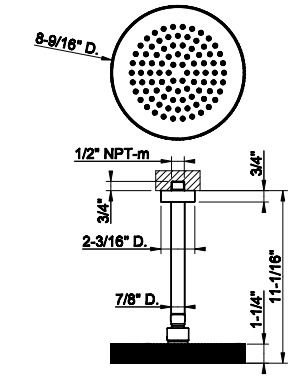



63552

Ceiling -mounted shower head with arm RIGATO.
- 1/2" connections.
- Projection from ceiling 11-1/16"
- Max flow rate 1.75 GPM

031	Chrome	2.363	707	Black Metal Br. PVD	3.732
149	Finox Br. Nickel	3.188	735	Warm Bronze PVD	3.495
187	Aged Bronze	3.732	726	Warm Bronze Br. PVD	3.732
713	Antique Brass	3.732	710	Brass PVD	3.495
030	Copper PVD	3.495	727	Brass Br. PVD	3.732
706	Black Metal PVD	3.495	720	Nickel PVD	3.495
708	Copper Br. PVD	3.732	299	Matte Black	3.188

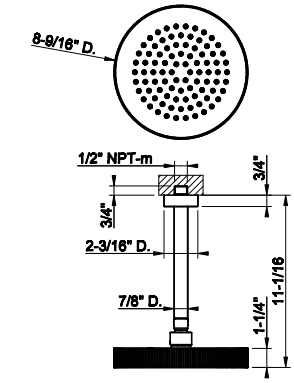

HEADSHOWER SECTION

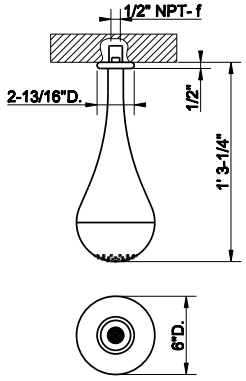

35351

Ceiling-mounted shower head
- 1/2” connections
- Projection from ceiling 15-1/4”
- Max flow rate 1.75 GPM



031	Chrome	2.490	126	Black Metal Br. GHRC	3.237
123	Copper GHRC	2.988	279	Matte White	3.363
124	Black Metal GHRC	2.988	299	Matte Black	3.363
125	Copper Br. GHRC	3.237			

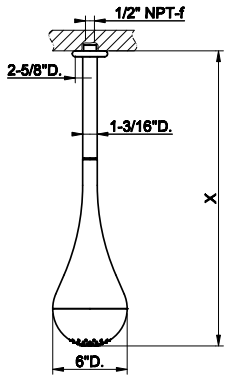

35353

Ceiling-mounted shower head
- 1/2” connections
- Custom length: Minimum 19” - Maximum 85-15/16”
- Max flow rate 1.75 GPM



031	Chrome	3.672	126	Black Metal Br. GHRC	4.775
123	Copper GHRC	4.407	279	Matte White	4.958
124	Black Metal GHRC	4.407	299	Matte Black	4.958
125	Copper Br. GHRC	4.775			

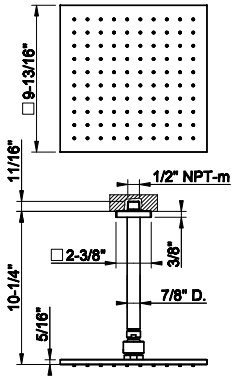

59155

Ceiling-mounted adjustable shower head with arm.
- 1/2” connections.
- Projection from ceiling 10-1/4”
- Max flow rate 1.75 GPM



031	Chrome	1.142	726	Warm Bronze Br. PVD	1.806
149	Finox Br. Nickel	1.541	710	Brass PVD	1.691
030	Copper PVD	1.691	727	Brass Br. PVD	1.806
706	Black Metal PVD	1.691	720	Nickel PVD	1.691
708	Copper Br. PVD	1.806	279	Matte White	1.541
707	Black Metal Br. PVD	1.806	299	Matte Black	1.541
735	Warm Bronze PVD	1.691			

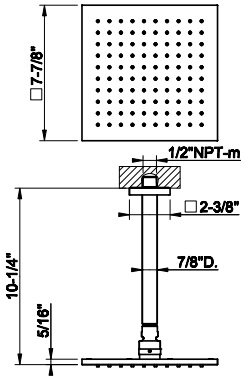

47290

Ceiling-mounted adjustable shower head with arm
- 1/2” connections
- Projection from ceiling 10-1/4”
- Square 7-7/8””
- Max flow rate 1.75 GPM

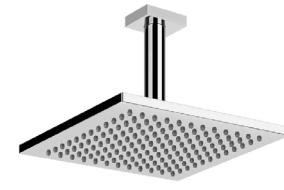

031	Chrome	792	299	Matte Black	1.069
149	Finox Br. Nickel	1.069			


GESSI
PRIVATE
WELLNESS




ON/OFF
38°
GESSI PRIVATE WELLNESS

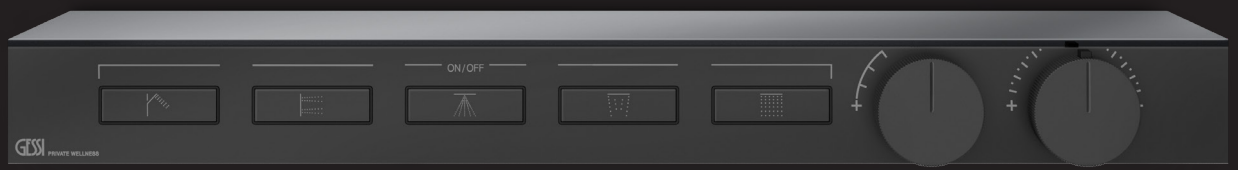
ON/OFF
GESSI PRIVATE WELLNESS


ON/OFF
38°
GESSI PRIVATE WELLNESS

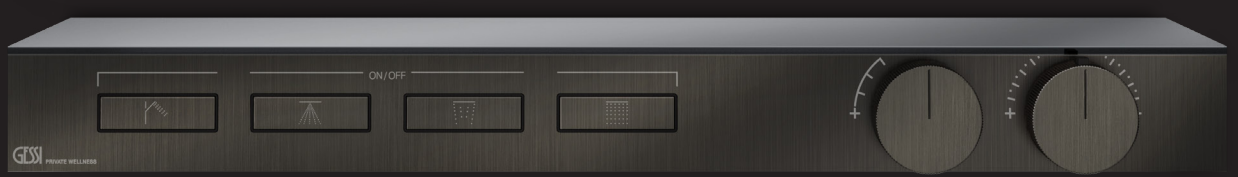
ON/OFF
GESSI PRIVATE WELLNESS


ON/OFF
38°
GESSI PRIVATE WELLNESS


ON/OFF
GESSI PRIVATE WELLNESS


ON/OFF
H
C
GESSI PRIVATE WELLNESS

HI-FI

Push-button

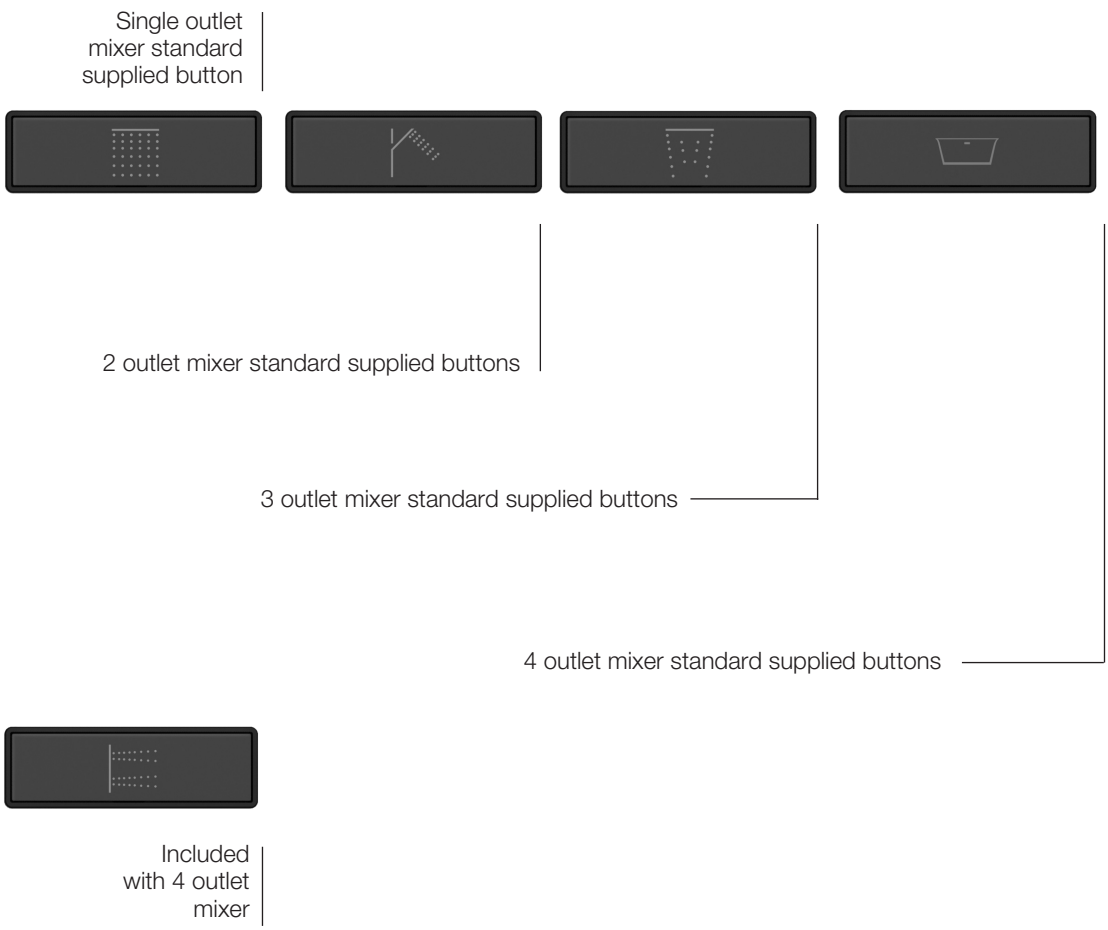
Single outlet mixer standard supplied button
2 outlet mixer standard supplied buttons
3 outlet mixer standard supplied buttons
4 outlet mixer standard supplied buttons
Included with 4 outlet mixer

The standard keys can be replaced with special etched one having the specific icons of the water outlets required by the customer. Any custom key can be ordered separately. Keys without etching or neutral configurated are not available.

SP02766

Push-button plate with Rainfall symbol
SP02774 - 63006, 63081



SP02767

Push-button plate with Waterfall symbol
SP02775 - 63006, 63081



SP02768

Push-button plate with Atomizer symbol
SP02776 - 63006, 63081



SP02769

Push-button plate with Handshower symbol
SP02777 - 63006, 63081



SP02771

Push-button plate with Bathtub symbol
SP02779 - 63006, 63081



SP02770

Push-button plate with Body Jets symbol
SP02778 - 63006, 63081



SP02782

Push-button plate
with wall-mounted Waterfall symbo
SP02784 - 63006, 63081



SP02783

Push-button plate
with wall-mounted Atomizer symbo
SP02785 - 63006, 63081



SP02773

Push-button plate
with Water Tube Kneipp symbol
SP02781 - 63006, 63081



SP02772

Push-button plate with Foot Spout symbol
SP02780 - 63006, 63081





63001

In-wall thermostatic rough valve for 1/2/3- way diverter function .
- 1/2”connections
- Anti-scalding
- Please consult rough valvedimensions - this unit will NOT fit in a standard 4” wall

031	Chrome	1.164

63001+63004

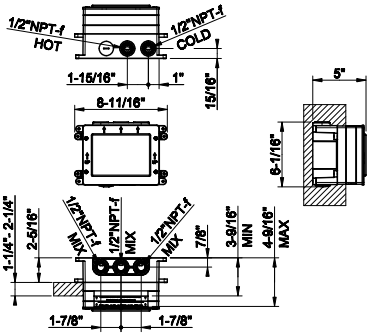

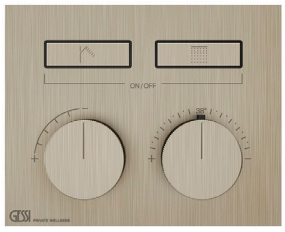

63004

TRIM PARTS ONLY External parts for thermostatic mixer for two functions, with push-button on/off control
- Single backplate
- 1/2”connections
- Anti-scalding
- Requires in-wall rough valve 63001
- Non-Shared function

031	Chrome	2.604	735	Warm Bronze PVD	3.853
149	Finox Br. Nickel	3.514	726	Warm Bronze Br. PVD	4.113
299	Matte Black	3.514	710	Brass PVD	3.853
720	Nickel PVD	3.853	727	Brass Br. PVD	4.113
706	Black Metal PVD	3.853	246	Gold PVD	4.374
707	Black Metal Br. PVD	4.113	716	Gold Br. PVD	4.374
030	Copper PVD	3.853	187	Aged Bronze	4.113
708	Copper Br. PVD	4.113	713	Antique Brass	4.113

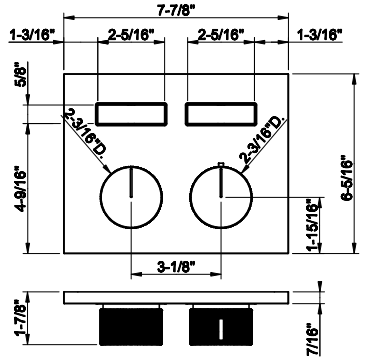



63001

In-wall thermostatic rough valve for 1/2/3- way diverter function .
- 1/2”connections
- Anti-scalding
- Please consult rough valvedimensions - this unit will NOT fit in a standard 4” wall

031	Chrome	1.164

63001+63006

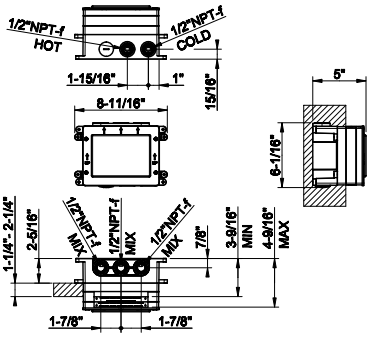

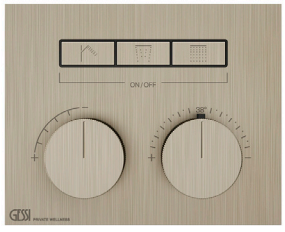

63006

TRIM PARTS ONLY External parts for thermostatic mixer for three functions, with push-button on/off control
- Single backplate
- 1/2”connections
- Anti-scalding
- Requires in-wall rough valve 63001
- Non-Shared function

031	Chrome	2.731	735	Warm Bronze PVD	4.042
149	Finox Br. Nickel	3.687	726	Warm Bronze Br. PVD	4.314
299	Matte Black	3.687	710	Brass PVD	4.042
720	Nickel PVD	4.042	727	Brass Br. PVD	4.314
706	Black Metal PVD	4.042	246	Gold PVD	4.588
707	Black Metal Br. PVD	4.314	716	Gold Br. PVD	4.588
030	Copper PVD	4.042	187	Aged Bronze	4.314
708	Copper Br. PVD	4.314	713	Antique Brass	4.314

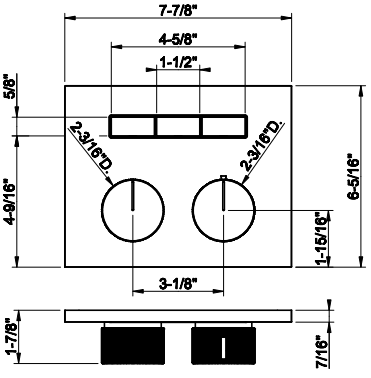

63011+63012

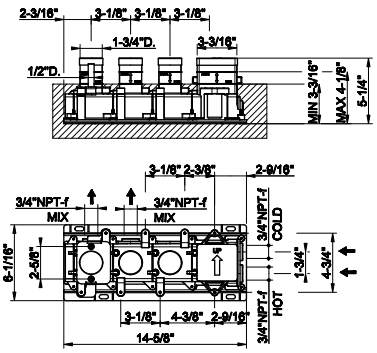

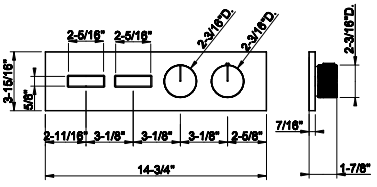

63011

In-wall thermostatic rough valve for two separate functions.
- High capacity
- 3/4”connections
- Anti-scalding

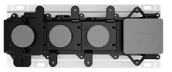

031	Chrome	1.654

63012

TRIM PARTS ONLY External parts for thermostatic mixer for two separate functions, with push-button on/off controls.
- Single backplate
- High capacity
- 3/4”connections
- Anti-scalding
- Requires in-wall rough valve 63011



031	Chrome	2.973	735	Warm Bronze PVD	4.399
149	Finox Br. Nickel	4.013	726	Warm Bronze Br. PVD	4.696
299	Matte Black	4.013	710	Brass PVD	4.399
720	Nickel PVD	4.399	727	Brass Br. PVD	4.696
706	Black Metal PVD	4.399	246	Gold PVD	4.995
707	Black Metal Br. PVD	4.696	716	Gold Br. PVD	4.995
030	Copper PVD	4.399	187	Aged Bronze	4.696
708	Copper Br. PVD	4.696	713	Antique Brass	4.696

63013+63014

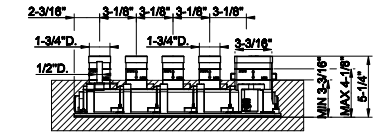

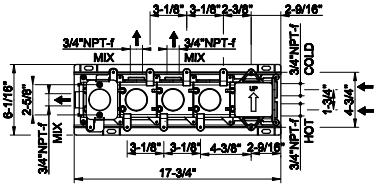

63013

In-wall thermostatic rough valve for three simultaneous functions.
- High capacity
- 3/4”connections
- Anti-scalding

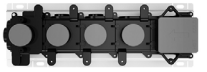

031	Chrome	1.820

63014

TRIM PARTS ONLY External parts for thermostatic mixer for three simultaneous functions, with push-button on/off controls.
- Single backplate
- High capacity
- 3/4”connections
- Anti-scalding
- Requires in-wall rough valve 63013



031	Chrome	3.500	735	Warm Bronze PVD	5.179
149	Finox Br. Nickel	4.725	726	Warm Bronze Br. PVD	5.530
299	Matte Black	4.725	710	Brass PVD	5.179
720	Nickel PVD	5.179	727	Brass Br. PVD	5.530
706	Black Metal PVD	5.179	246	Gold PVD	5.879
707	Black Metal Br. PVD	5.530	716	Gold Br. PVD	5.879
030	Copper PVD	5.179	187	Aged Bronze	5.530
708	Copper Br. PVD	5.530	713	Antique Brass	5.530

63015

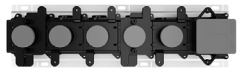

In-wall thermostatic rough valve for four simultaneous functions.
- High capacity
- 3/4”connections
- Anti-scalding

031	Chrome	2.282

63015+63016

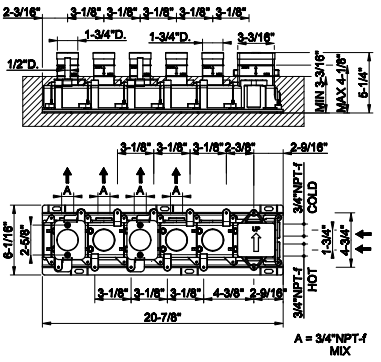

63016



TRIM PARTS ONLY External parts for thermostatic mixer for four simultaneous functions, with push-button on/off controls.
- Singlebackplate
- High capacity
- 3/4”connections
- Anti-scalding
- Requires in-wall rough valve 63015

031	Chrome	4.100	735	Warm Bronze PVD	6.068
149	Finox Br. Nickel	5.535	726	Warm Bronze Br. PVD	6.478
299	Matte Black	5.535	710	Brass PVD	6.068
720	Nickel PVD	6.068	727	Brass Br. PVD	6.478
706	Black Metal PVD	6.068	246	Gold PVD	6.888
707	Black Metal Br. PVD	6.478	716	Gold Br. PVD	6.888
030	Copper PVD	6.068	187	Aged Bronze	6.478
708	Copper Br. PVD	6.478	713	Antique Brass	6.478

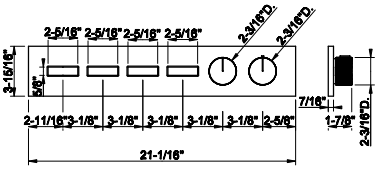

63021



In-wall thermostatic rough valve for shelf mixer for two simultaneous functions.
- High capacity
- 1/2”connections Outlet
- 3/4” connections Inlet
- Anti-scalding

031	Chrome	964

63021+63022

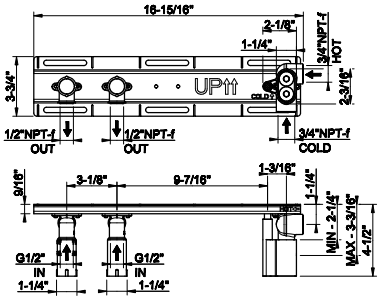

63022



TRIM PARTS ONLY External parts for thermostatic shelf mixer for two simultaneous functions, with push-button on/off controls. Shelf made of black frosted safety glass.
- Single backplate
- High capacity
- 1/2”connections Outlet
- 3/4” connections Inlet
- Anti-scalding
- Requires in-wall rough valve 63021

031	Chrome	4.989	735	Warm Bronze PVD	7.386
149	Finox Br. Nickel	6.736	726	Warm Bronze Br. PVD	7.883
299	Matte Black	6.736	710	Brass PVD	7.386
720	Nickel PVD	7.386	727	Brass Br. PVD	7.883
706	Black Metal PVD	7.386	246	Gold PVD	8.383
707	Black Metal Br. PVD	7.883	716	Gold Br. PVD	8.383
030	Copper PVD	7.386	187	Aged Bronze	7.883
708	Copper Br. PVD	7.883	713	Antique Brass	7.883

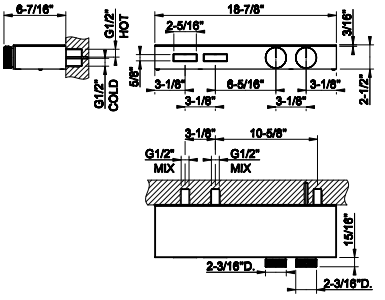

63023+63024

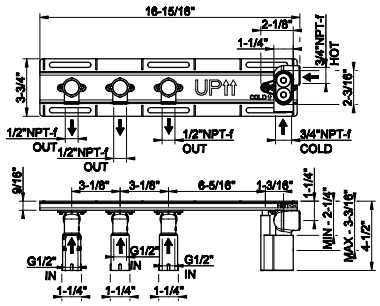

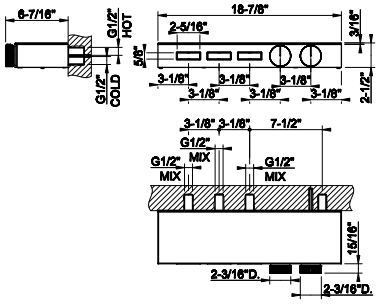

63023

In-wall thermostatic rough valve for shelf mixer for three simultaneous functions.
- High capacity
- 1/2”connections Outlet
- 3/4”connections Inlet
- Anti-scalding



031	Chrome	1.019

63024

TRIM PARTS ONLY External parts for thermostatic shelf mixer for three simultaneous functions, with push-button on/off controls.Shelf made of black frosted safety glass.
- Single backplate
- High capacity
- 1/2”connections Outlet
- 3/4” connections Inlet
- Anti-scalding
- Requires in-wall rough valve 63023



031	Chrome	5.171	735	Warm Bronze PVD	7.653
149	Finox Br. Nickel	6.981	726	Warm Bronze Br. PVD	8.170
299	Matte Black	6.981	710	Brass PVD	7.653
720	Nickel PVD	7.653	727	Brass Br. PVD	8.170
706	Black Metal PVD	7.653	246	Gold PVD	8.688
707	Black Metal Br. PVD	8.170	716	Gold Br. PVD	8.688
030	Copper PVD	7.653	187	Aged Bronze	8.170
708	Copper Br. PVD	8.170	713	Antique Brass	8.170

63025+63026

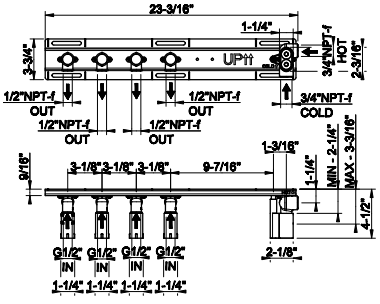

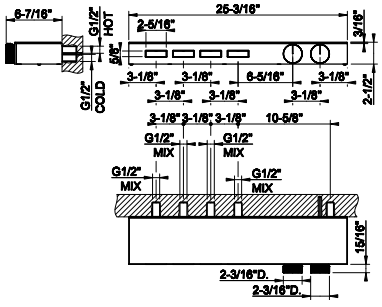

63025

In-wall thermostatic rough valve for shelf mixer for four simultaneous functions.
- High capacity
- 1/2”connections Outlet
- 3/4”connections Inlet
- Anti-scalding



031	Chrome	1.138

63026

TRIM PARTS ONLY External parts for thermostatic shelf mixer for four simultaneous functions, with push-button on/off controls. Shelf made of black frosted safety glass.
- Single backplate
- High capacity
- 1/2”connections Outlet
- 3/4” connections Inlet
- Anti-scalding
- Requires in-wall rough valve 63025



031	Chrome	6.391	735	Warm Bronze PVD	9.460
149	Finox Br. Nickel	8.629	726	Warm Bronze Br. PVD	10.100
299	Matte Black	8.629	710	Brass PVD	9.460
720	Nickel PVD	9.460	727	Brass Br. PVD	10.100
706	Black Metal PVD	9.460	246	Gold PVD	10.737
707	Black Metal Br. PVD	10.100	716	Gold Br. PVD	10.737
030	Copper PVD	9.460	187	Aged Bronze	10.100
708	Copper Br. PVD	10.100	713	Antique Brass	10.100

63099



Magnetic anti-limestone handshower set
- Fixed hook
- Wall elbow
- 59” Cromalux flex hose
- Max flow rate 1.75 GPM

031	Chrome	1.213	726	Warm Bronze Br. PVD	1.916
149	Finox Br. Nickel	1.638	710	Brass PVD	1.794
299	Matte Black	1.638	727	Brass Br. PVD	1.916
720	Nickel PVD	1.794	246	Gold PVD	2.037
706	Black Metal PVD	1.794	716	Gold Br. PVD	2.037
707	Black Metal Br. PVD	1.916	187	Aged Bronze	1.916
030	Copper PVD	1.794	713	Antique Brass	1.916
708	Copper Br. PVD	1.916	845	Dark Bronze	1.916
735	Warm Bronze PVD	1.794			

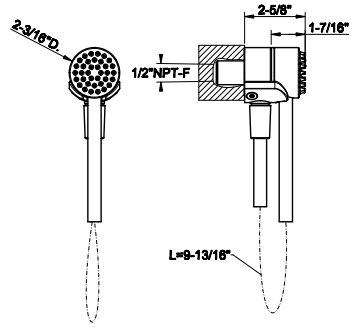

63199



Magnetic anti-limestone handshower set
- Fixed hook
- Wall elbow
- 59” flex hose in black
- Max flow rate 1.75 GPM

031	Chrome	1.213	726	Warm Bronze Br. PVD	1.916
149	Finox Br. Nickel	1.638	710	Brass PVD	1.794
299	Matte Black	1.638	727	Brass Br. PVD	1.916
720	Nickel PVD	1.794	246	Gold PVD	2.037
706	Black Metal PVD	1.794	716	Gold Br. PVD	2.037
707	Black Metal Br. PVD	1.916	187	Aged Bronze	1.916
030	Copper PVD	1.794	713	Antique Brass	1.916
708	Copper Br. PVD	1.916	845	Dark Bronze	1.916
735	Warm Bronze PVD	1.794			

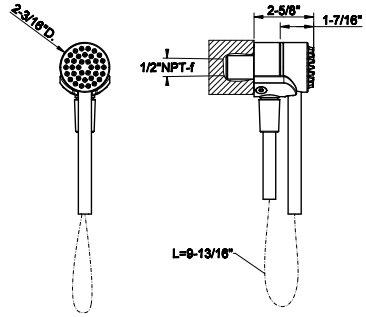

63057

Adjustable handshower hook



031	Chrome	1.150	726	Warm Bronze Br. PVD	1.816
149	Finox Br. Nickel	1.555	710	Brass PVD	1.701
299	Matte Black	1.555	727	Brass Br. PVD	1.816
720	Nickel PVD	1.701	246	Gold PVD	1.931
706	Black Metal PVD	1.701	716	Gold Br. PVD	1.931
707	Black Metal Br. PVD	1.816	187	Aged Bronze	1.816
030	Copper PVD	1.701	713	Antique Brass	1.816
708	Copper Br. PVD	1.816	845	Dark Bronze	1.816
735	Warm Bronze PVD	1.701			

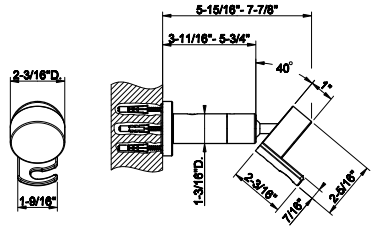

SP02766

Push-botton plate with RAINFALL symbol.
For Linear & Shelf Hi-Fi.



031	Chrome	235	726	Warm Bronze Br. PVD	394
149	Finox Br. Nickel	317	710	Brass PVD	371
299	Matte Black	317	727	Brass Br. PVD	394
720	Nickel PVD	371	246	Gold PVD	418
706	Black Metal PVD	371	716	Gold Br. PVD	418
707	Black Metal Br. PVD	394	187	Aged Bronze	394
030	Copper PVD	371	713	Antique Brass	394
708	Copper Br. PVD	394	845	Dark Bronze	394
735	Warm Bronze PVD	371			

HI-FI

SP02767

Push-botton plate with WATERFALL symbol. For Linear & Shelf Hi-Fi.



031	Chrome	235	726	Warm Bronze Br. PVD	394
149	Finox Br. Nickel	317	710	Brass PVD	371
299	Matte Black	317	727	Brass Br. PVD	394
720	Nickel PVD	371	246	Gold PVD	418
706	Black Metal PVD	371	716	Gold Br. PVD	418
707	Black Metal Br. PVD	394	187	Aged Bronze	394
030	Copper PVD	371	713	Antique Brass	394
708	Copper Br. PVD	394	845	Dark Bronze	394
735	Warm Bronze PVD	371			

SP02768

Push-botton plate with ATOMIZER symbol. For Linear & Shelf Hi-Fi.



031	Chrome	235	726	Warm Bronze Br. PVD	394
149	Finox Br. Nickel	317	710	Brass PVD	371
299	Matte Black	317	727	Brass Br. PVD	394
720	Nickel PVD	371	246	Gold PVD	418
706	Black Metal PVD	371	716	Gold Br. PVD	418
707	Black Metal Br. PVD	394	187	Aged Bronze	394
030	Copper PVD	371	713	Antique Brass	394
708	Copper Br. PVD	394	845	Dark Bronze	394
735	Warm Bronze PVD	371			

SP02769

Push-botton plate with HANDSHOWER symbol. For Linear & Shelf Hi-Fi.



031	Chrome	235	726	Warm Bronze Br. PVD	394
149	Finox Br. Nickel	317	710	Brass PVD	371
299	Matte Black	317	727	Brass Br. PVD	394
720	Nickel PVD	371	246	Gold PVD	418
706	Black Metal PVD	371	716	Gold Br. PVD	418
707	Black Metal Br. PVD	394	187	Aged Bronze	394
030	Copper PVD	371	713	Antique Brass	394
708	Copper Br. PVD	394	845	Dark Bronze	394
735	Warm Bronze PVD	371			

SP02770

Push-botton plate with BODY JETS symbol. For Linear & Shelf Hi-Fi.



031	Chrome	235	726	Warm Bronze Br. PVD	394
149	Finox Br. Nickel	317	710	Brass PVD	371
299	Matte Black	317	727	Brass Br. PVD	394
720	Nickel PVD	371	246	Gold PVD	418
706	Black Metal PVD	371	716	Gold Br. PVD	418
707	Black Metal Br. PVD	394	187	Aged Bronze	394
030	Copper PVD	371	713	Antique Brass	394
708	Copper Br. PVD	394	845	Dark Bronze	394
735	Warm Bronze PVD	371			

SP02771

Push-botton plate with BATHTUB symbol.
For Linear & Shelf Hi-Fi.



031	Chrome	235	726	Warm Bronze Br. PVD	394
149	Finox Br. Nickel	317	710	Brass PVD	371
299	Matte Black	317	727	Brass Br. PVD	394
720	Nickel PVD	371	246	Gold PVD	418
706	Black Metal PVD	371	716	Gold Br. PVD	418
707	Black Metal Br. PVD	394	187	Aged Bronze	394
030	Copper PVD	371	713	Antique Brass	394
708	Copper Br. PVD	394	845	Dark Bronze	394
735	Warm Bronze PVD	371			

SP02772

Push-botton plate with FOOT SPOUT
symbol. For Linear & Shelf Hi-Fi.



031	Chrome	235	726	Warm Bronze Br. PVD	394
149	Finox Br. Nickel	317	710	Brass PVD	371
299	Matte Black	317	727	Brass Br. PVD	394
720	Nickel PVD	371	246	Gold PVD	418
706	Black Metal PVD	371	716	Gold Br. PVD	418
707	Black Metal Br. PVD	394	187	Aged Bronze	394
030	Copper PVD	371	713	Antique Brass	394
708	Copper Br. PVD	394	845	Dark Bronze	394
735	Warm Bronze PVD	371			

SP02773

Push-botton plate with WATER TUBE KNEIPP symbol. To be combined with art. 63002, 63004, 63012, 63014, 63016, 63018, 63022, 63024, 63026, 63028, 63061, 63079, 63041, 63043.



031	Chrome	234	726	Warm Bronze Br. PVD	391
149	Finox Br. Nickel	316	710	Brass PVD	368
299	Matte Black	316	727	Brass Br. PVD	391
720	Nickel PVD	368	246	Gold PVD	414
706	Black Metal PVD	368	716	Gold Br. PVD	414
707	Black Metal Br. PVD	391	187	Aged Bronze	391
030	Copper PVD	368	713	Antique Brass	391
708	Copper Br. PVD	391	845	Dark Bronze	391
735	Warm Bronze PVD	368			

SP02782

Push-botton plate with WALL-MOUNTED
WATERFALL symbol. For Linear & Shelf Hi-Fi.



031	Chrome	197	726	Warm Bronze Br. PVD	331
149	Finox Br. Nickel	266	710	Brass PVD	312
299	Matte Black	266	727	Brass Br. PVD	331
720	Nickel PVD	312	246	Gold PVD	351
706	Black Metal PVD	312	716	Gold Br. PVD	351
707	Black Metal Br. PVD	331	187	Aged Bronze	331
030	Copper PVD	312	713	Antique Brass	331
708	Copper Br. PVD	331	845	Dark Bronze	331
735	Warm Bronze PVD	312			

GESSI

SP02783

Push-botton plate with WALL-MOUNTED ATOMIZER symbol. For Linear & Shelf Hi-Fi.



031	Chrome	197	726	Warm Bronze Br. PVD	331
149	Finox Br. Nickel	266	710	Brass PVD	312
299	Matte Black	266	727	Brass Br. PVD	331
720	Nickel PVD	312	246	Gold PVD	351
706	Black Metal PVD	312	716	Gold Br. PVD	351
707	Black Metal Br. PVD	331	187	Aged Bronze	331
030	Copper PVD	312	713	Antique Brass	331
708	Copper Br. PVD	331	845	Dark Bronze	331
735	Warm Bronze PVD	312			

SP02774

Push-botton plate with RAINFALL symbol. For item 63006.



031	Chrome	197	726	Warm Bronze Br. PVD	331
149	Finox Br. Nickel	266	710	Brass PVD	312
299	Matte Black	266	727	Brass Br. PVD	331
720	Nickel PVD	312	246	Gold PVD	351
706	Black Metal PVD	312	716	Gold Br. PVD	351
707	Black Metal Br. PVD	331	187	Aged Bronze	331
030	Copper PVD	312	713	Antique Brass	331
708	Copper Br. PVD	331	845	Dark Bronze	331
735	Warm Bronze PVD	312			

SP02775

Push-botton plate with WATERFALL symbol. For item 63006.



031	Chrome	197	726	Warm Bronze Br. PVD	331
149	Finox Br. Nickel	266	710	Brass PVD	312
299	Matte Black	266	727	Brass Br. PVD	331
720	Nickel PVD	312	246	Gold PVD	351
706	Black Metal PVD	312	716	Gold Br. PVD	351
707	Black Metal Br. PVD	331	187	Aged Bronze	331
030	Copper PVD	312	713	Antique Brass	331
708	Copper Br. PVD	331	845	Dark Bronze	331
735	Warm Bronze PVD	312			

SP02776

Push-botton plate with ATOMIZER symbol. For item 63006.



031	Chrome	197	726	Warm Bronze Br. PVD	331
149	Finox Br. Nickel	266	710	Brass PVD	312
299	Matte Black	266	727	Brass Br. PVD	331
720	Nickel PVD	312	246	Gold PVD	351
706	Black Metal PVD	312	716	Gold Br. PVD	351
707	Black Metal Br. PVD	331	187	Aged Bronze	331
030	Copper PVD	312	713	Antique Brass	331
708	Copper Br. PVD	331	845	Dark Bronze	331
735	Warm Bronze PVD	312			

SP02777

Push-botton plate with HANDSHOWER symbol. For item 63006.



031	Chrome	197	726	Warm Bronze Br. PVD	331
149	Finox Br. Nickel	266	710	Brass PVD	312
299	Matte Black	266	727	Brass Br. PVD	331
720	Nickel PVD	312	246	Gold PVD	351
706	Black Metal PVD	312	716	Gold Br. PVD	351
707	Black Metal Br. PVD	331	187	Aged Bronze	331
030	Copper PVD	312	713	Antique Brass	331
708	Copper Br. PVD	331	845	Dark Bronze	331
735	Warm Bronze PVD	312			

SP02778

Push-botton plate with BODY JETS symbol. For item 63006.



031	Chrome	197	726	Warm Bronze Br. PVD	331
149	Finox Br. Nickel	266	710	Brass PVD	312
299	Matte Black	266	727	Brass Br. PVD	331
720	Nickel PVD	312	246	Gold PVD	351
706	Black Metal PVD	312	716	Gold Br. PVD	351
707	Black Metal Br. PVD	331	187	Aged Bronze	331
030	Copper PVD	312	713	Antique Brass	331
708	Copper Br. PVD	331	845	Dark Bronze	331
735	Warm Bronze PVD	312			

SP02779

Push-botton plate with BATHTUB symbol. For item 63006.



031	Chrome	197	726	Warm Bronze Br. PVD	331
149	Finox Br. Nickel	266	710	Brass PVD	312
299	Matte Black	266	727	Brass Br. PVD	331
720	Nickel PVD	312	246	Gold PVD	351
706	Black Metal PVD	312	716	Gold Br. PVD	351
707	Black Metal Br. PVD	331	187	Aged Bronze	331
030	Copper PVD	312	713	Antique Brass	331
708	Copper Br. PVD	331	845	Dark Bronze	331
735	Warm Bronze PVD	312			

SP02780

Push-botton plate with FOOT SPOUT symbol. For item 63006.



031	Chrome	197	726	Warm Bronze Br. PVD	331
149	Finox Br. Nickel	266	710	Brass PVD	312
299	Matte Black	266	727	Brass Br. PVD	331
720	Nickel PVD	312	246	Gold PVD	351
706	Black Metal PVD	312	716	Gold Br. PVD	351
707	Black Metal Br. PVD	331	187	Aged Bronze	331
030	Copper PVD	312	713	Antique Brass	331
708	Copper Br. PVD	331	845	Dark Bronze	331
735	Warm Bronze PVD	312			

SP02781

Push-botton plate with WATER TUBE KNEIPP symbol, for items 63006 and 63081.



031	Chrome	196	726	Warm Bronze Br. PVD	329
149	Finox Br. Nickel	265	710	Brass PVD	310
299	Matte Black	265	727	Brass Br. PVD	329
720	Nickel PVD	310	246	Gold PVD	349
706	Black Metal PVD	310	716	Gold Br. PVD	349
707	Black Metal Br. PVD	329	187	Aged Bronze	329
030	Copper PVD	310	713	Antique Brass	329
708	Copper Br. PVD	329	845	Dark Bronze	329
735	Warm Bronze PVD	310			

SP02784

Push-botton plate with WALL-MOUNTED WATERFALL symbol. For item 63006.



031	Chrome	197	726	Warm Bronze Br. PVD	331
149	Finox Br. Nickel	266	710	Brass PVD	312
299	Matte Black	266	727	Brass Br. PVD	331
720	Nickel PVD	312	246	Gold PVD	351
706	Black Metal PVD	312	716	Gold Br. PVD	351
707	Black Metal Br. PVD	331	187	Aged Bronze	331
030	Copper PVD	312	713	Antique Brass	331
708	Copper Br. PVD	331	845	Dark Bronze	331
735	Warm Bronze PVD	312			

SP02785

Push-botton plate with WALL-MOUNTED ATOMIZER symbol. For item 63006.



031	Chrome	197	726	Warm Bronze Br. PVD	331
149	Finox Br. Nickel	266	710	Brass PVD	312
299	Matte Black	266	727	Brass Br. PVD	331
720	Nickel PVD	312	246	Gold PVD	351
706	Black Metal PVD	312	716	Gold Br. PVD	351
707	Black Metal Br. PVD	331	187	Aged Bronze	331
030	Copper PVD	312	713	Antique Brass	331
708	Copper Br. PVD	331	845	Dark Bronze	331
735	Warm Bronze PVD	312			

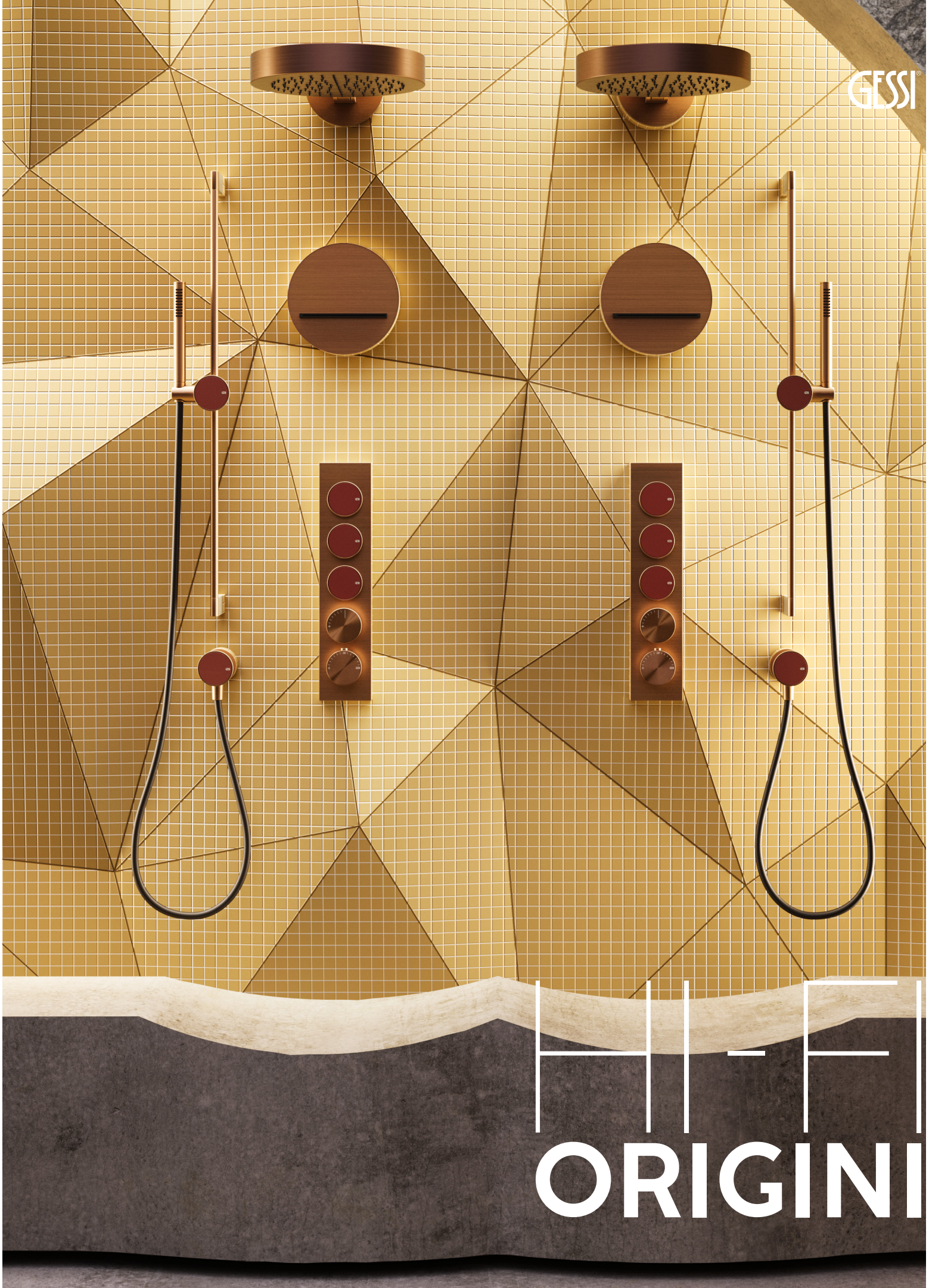

HI-FI ORIGINI

63011

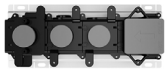

In-wall thermostatic rough valve for two separate functions.
- High capacity
- 3/4”connections
- Anti-scalding

031	Chrome	1.654

63011+66222

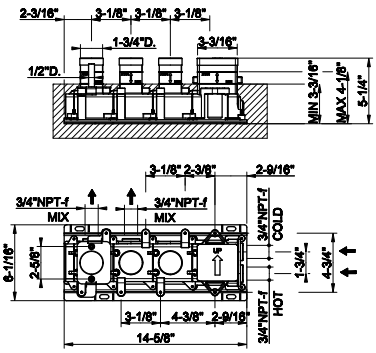

66222



TRIM PARTS ONLY External parts for thermostatic mixer for two functions, with push-button on/off control
- Single backplate
- 1/2”connections
- Anti-scalding
- Requires in-wall rough valve 63011
- Can be combined with the insert 66600 and 66602 of the desired finish.

031	Chrome	3.030	707	Black Metal Br. PVD	4.786
149	Finox Br. Nickel	4.091	708	Copper Br. PVD	4.786
299	Matte Black	4.091	726	Warm Bronze Br. PVD	4.786
720	Nickel PVD	4.484	727	Brass Br. PVD	4.786
706	Black Metal PVD	4.484	845	Dark Bronze	4.786

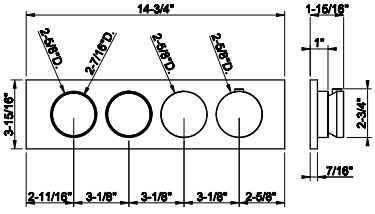

63013

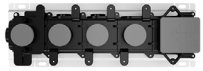

In-wall thermostatic rough valve for three simultaneous functions.
- High capacity
- 3/4”connections
- Anti-scalding

031	Chrome	1.820

63013+66224

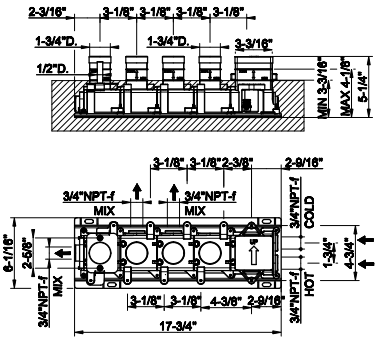

66224



TRIM PARTS ONLY External parts for thermostatic mixer for three functions, with push-button on/off control
- Single backplate
- 1/2”connections
- Anti-scalding
- Requires in-wall rough valve 63013
- Can be combined with the insert 66600 and 66602 of the desired finish.

031	Chrome	3.567	707	Black Metal Br. PVD	5.635
149	Finox Br. Nickel	4.817	708	Copper Br. PVD	5.635
299	Matte Black	4.817	726	Warm Bronze Br. PVD	5.635
720	Nickel PVD	5.279	727	Brass Br. PVD	5.635
706	Black Metal PVD	5.279	845	Dark Bronze	5.635

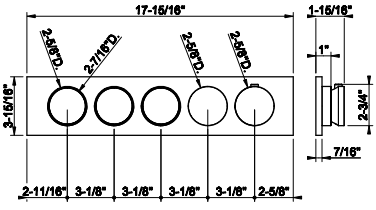

HI-FI ORIGINI

63015+66226

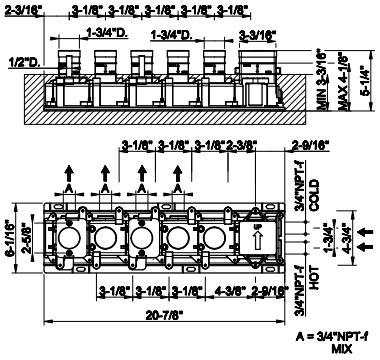

63015

In-wall thermostatic rough valve for four simultaneous functions.
- High capacity
- 3/4”connections
- Anti-scalding

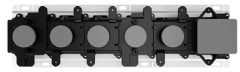

031	Chrome	2.282

66226

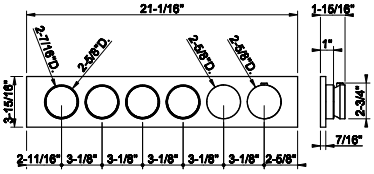

TRIM PARTS ONLY External parts for thermostatic mixer for four functions, with push-button on/off control
- Single backplate
- 1/2”connections
- Anti-scalding
- Requires in-wall rough valve 63015
- Can be combined with the insert 66600 and 66602 of the desired finish.



031	Chrome	4.178	707	Black Metal Br. PVD	6.603
149	Finox Br. Nickel	5.644	708	Copper Br. PVD	6.603
299	Matte Black	5.644	726	Warm Bronze Br. PVD	6.603
720	Nickel PVD	6.185	727	Brass Br. PVD	6.603
706	Black Metal PVD	6.185	845	Dark Bronze	6.603

66600

Insert

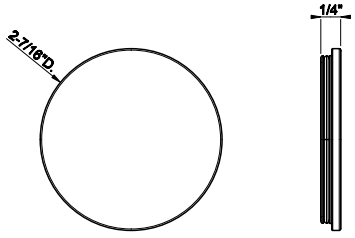



031	Chrome	126	299	Matte Black	171
275	Matte Cipria	171	720	Nickel PVD	186
273	Matte Greige	171	706	Black Metal PVD	186
277	Glossy Ocra	198	707	Black Metal Br. PVD	198
280	Matte Ocra	171	708	Copper Br. PVD	198
278	Glossy Coral	198	726	Warm Bronze Br. PVD	198
281	Matte Coral	171	727	Brass Br. PVD	198
276	Matte Agave	171	845	Dark Bronze	198
149	Finox Br. Nickel	171			

66602

Insert ART

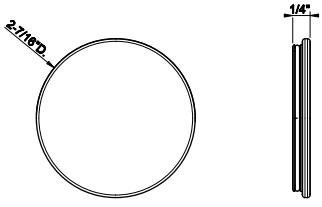

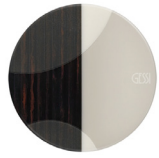

290	Materic	226	287	Warm	226
289	Accent	226	286	Neutral	226
288	Nature	226			

66604

Kit 5 Insert



031	Chrome	539	299	Matte Black	728
275	Matte Cipria	728	720	Nickel PVD	799
273	Matte Greige	728	706	Black Metal PVD	799
277	Glossy Ocra	728	707	Black Metal Br. PVD	850
280	Matte Ocra	728	708	Copper Br. PVD	850
278	Glossy Coral	728	726	Warm Bronze Br. PVD	850
281	Matte Coral	728	727	Brass Br. PVD	850
276	Matte Agave	728	845	Dark Bronze	799
149	Finox Br. Nickel	728			

66605

Kit 5 Insert ART



290	Materic	876	287	Warm	876
289	Accent	876	286	Neutral	876
288	Nature	876			

GESSI

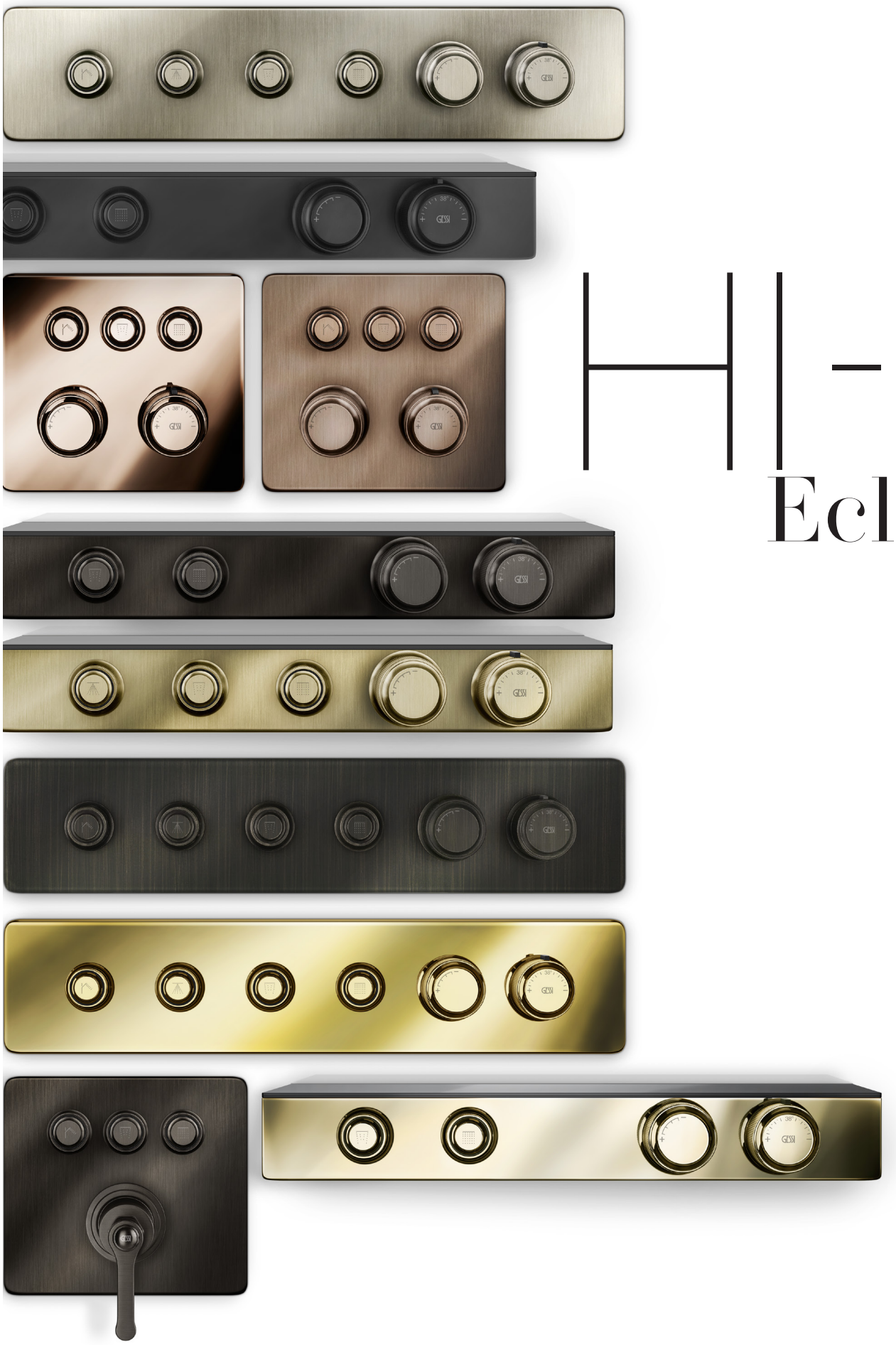

HI-FI

Eclectic

push- BUTTON

The purchaser will receive the mixer with a standard keys configuration, as per the most common water functions selection.

Single outlet mixer standard supplied button



2 outlet mixer standard supplied buttons



3 outlet mixer standard supplied buttons



4 outlet mixer standard supplied buttons





Included with 4 outlet mixer

The standard keys can be replaced with special etched one having the specific icons of the water outlets required by the customer. Any custom key can be ordered separately. Keys without etching or neutral configurated are not available.

SP03289

Push-button plate with Rainfall symbol



SP03295

Push-button plate with Body Jets symbol

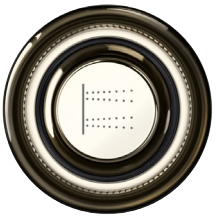

SP03292

Push-button plate with Waterfall symbol



SP03293

Push-button plate with wall-mounted Waterfall symbol



SP03291

Push-button plate with Atomizer symbol



SP03290

Push-button plate with wall-mounted Atomizer symbol



SP03294

Push-button plate with Handshower symbol



SP03297

Push-button plate with Water Tube Kneipp symbol



SP03296

Push-button plate with Bathtub symbol



SP03298

Push-button plate with Foot Spout symbol





63001

In-wall thermostatic rough valve for 1/2/3- way diverter function .
- 1/2”connections
- Anti-scalding
- Please consult rough valvedimensions - this unit will NOT fit in a standard 4” wall

031	Chrome	1.164

63001+65232

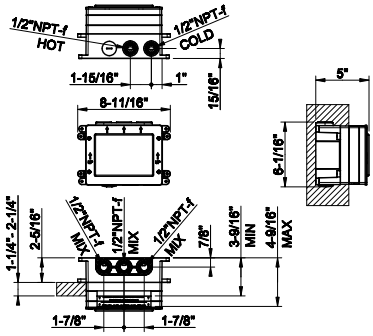



65232

TRIM PARTS ONLY External parts for thermostatic mixer for two functions, with push-button on/off control
- Single backplate
- 1/2”connections
- Anti-scalding
- Requires in-wall rough valve 63001
- Non-Shared Function

031	Chrome	2.353	726	Warm Bronze Br. PVD	3.717
149	Finox Br. Nickel	3.177	710	Brass PVD	3.483
299	Matte Black	3.177	727	Brass Br. PVD	3.717
720	Nickel PVD	3.483	246	Gold PVD	3.953
706	Black Metal PVD	3.483	716	Gold Br. PVD	3.953
707	Black Metal Br. PVD	3.717	187	Aged Bronze	3.717
030	Copper PVD	3.483	713	Antique Brass	3.717
708	Copper Br. PVD	3.717	845	Dark Bronze	3.717
735	Warm Bronze PVD	3.483			

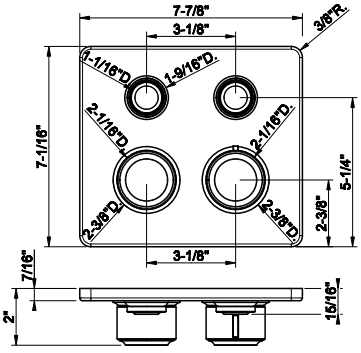



63001

In-wall thermostatic rough valve for 1/2/3- way diverter function .
- 1/2”connections
- Anti-scalding
- Please consult rough valvedimensions - this unit will NOT fit in a standard 4” wall

031	Chrome	1.164

63001+65234

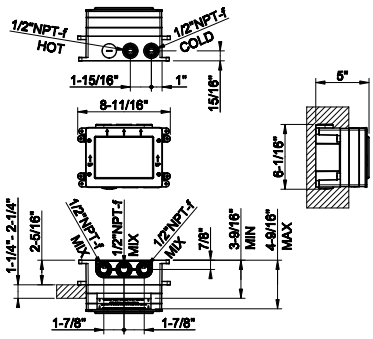



65234

TRIM PARTS ONLY External parts for thermostatic mixer for three functions, with push-button on/off control
- Single backplate
- 1/2”connections
- Anti-scalding
- Requires in-wall rough valve 63001
- Non-Shared Function

031	Chrome	2.471	726	Warm Bronze Br. PVD	3.899
149	Finox Br. Nickel	3.333	710	Brass PVD	3.652
299	Matte Black	3.333	727	Brass Br. PVD	3.899
720	Nickel PVD	3.652	246	Gold PVD	4.151
706	Black Metal PVD	3.652	716	Gold Br. PVD	4.151
707	Black Metal Br. PVD	3.899	187	Aged Bronze	3.899
030	Copper PVD	3.652	713	Antique Brass	3.899
708	Copper Br. PVD	3.899	845	Dark Bronze	3.899
735	Warm Bronze PVD	3.652			

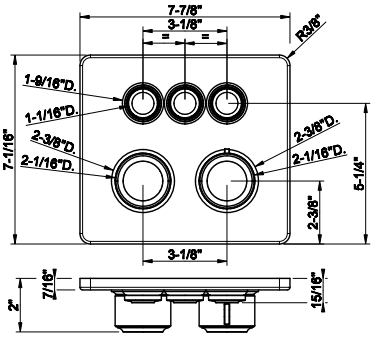

63011+65222

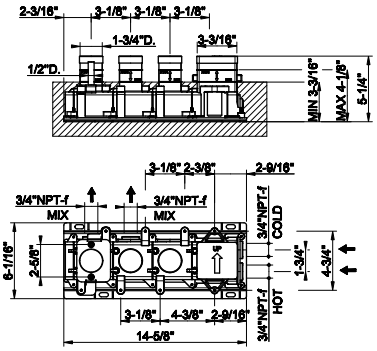

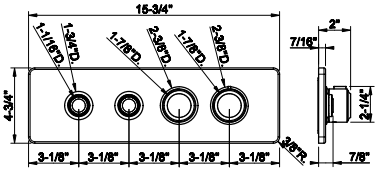

63011

In-wall thermostatic rough valve for two separate functions.
- High capacity
- 3/4”connections
- Anti-scalding

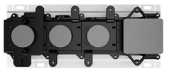

031	Chrome	1.654

65222

TRIM PARTS ONLY External parts for thermostatic mixer for two simultaneous functions, with push-button on/off controls.
- Singlebackplate
- High capacity
- 3/4”connections
- Anti-scalding
- Vertical/horizontal application
- Requires in-wall rough valve 63011



031	Chrome	2.957	726	Warm Bronze Br. PVD	4.667
149	Finox Br. Nickel	3.989	710	Brass PVD	4.374
299	Matte Black	3.989	727	Brass Br. PVD	4.667
720	Nickel PVD	4.374	246	Gold PVD	4.967
706	Black Metal PVD	4.374	716	Gold Br. PVD	4.967
707	Black Metal Br. PVD	4.667	187	Aged Bronze	4.667
030	Copper PVD	4.374	713	Antique Brass	4.667
708	Copper Br. PVD	4.667	845	Dark Bronze	4.667
735	Warm Bronze PVD	4.374			

63013+65224

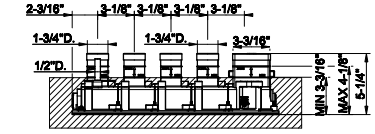

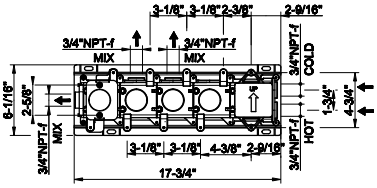

63013

In-wall thermostatic rough valve for three simultaneous functions.
- High capacity
- 3/4”connections
- Anti-scalding

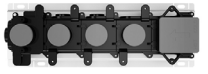

031	Chrome	1.820

65224

TRIM PARTS ONLY External parts for thermostatic mixer for three simultaneous functions, with push-button on/off controls.
- Single backplate
- High capacity
- 3/4”connections
- Anti-scalding
- Vertical/horizontal application
- Requires in-wall rough valve 63013

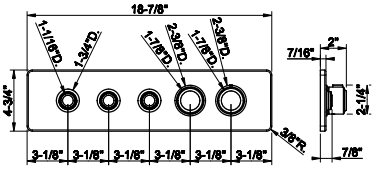



031	Chrome	3.480	726	Warm Bronze Br. PVD	5.497
149	Finox Br. Nickel	4.697	710	Brass PVD	5.148
299	Matte Black	4.697	727	Brass Br. PVD	5.497
720	Nickel PVD	5.148	246	Gold PVD	5.847
706	Black Metal PVD	5.148	716	Gold Br. PVD	5.847
707	Black Metal Br. PVD	5.497	187	Aged Bronze	5.497
030	Copper PVD	5.148	713	Antique Brass	5.497
708	Copper Br. PVD	5.497	845	Dark Bronze	5.497
735	Warm Bronze PVD	5.148			

63015

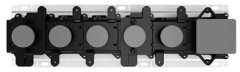

In-wall thermostatic rough valve for four simultaneous functions.
- High capacity
- 3/4"connections
- Anti-scalding

031	Chrome	2.282

63015+65226

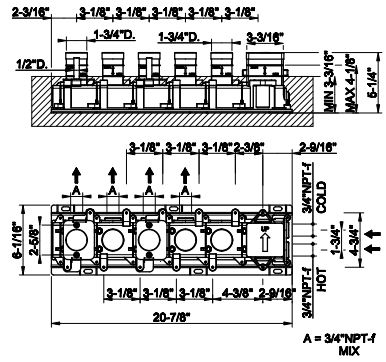

65226



TRIM PARTS ONLY External parts for thermostatic mixer for four simultaneous functions, with push-button on/off controls.
- Singlebackplate
- High capacity
- 3/4"connections
- Anti-scalding
- Vertical/horizontal application
- Requires in-wall rough valve 63015

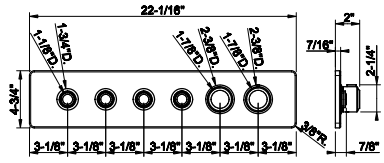

031	Chrome	4.077	726	Warm Bronze Br. PVD	6.437
149	Finox Br. Nickel	5.503	710	Brass PVD	6.032
299	Matte Black	5.503	727	Brass Br. PVD	6.437
720	Nickel PVD	6.032	246	Gold PVD	6.849
706	Black Metal PVD	6.032	716	Gold Br. PVD	6.849
707	Black Metal Br. PVD	6.437	187	Aged Bronze	6.437
030	Copper PVD	6.032	713	Antique Brass	6.437
708	Copper Br. PVD	6.437	845	Dark Bronze	6.437
735	Warm Bronze PVD	6.032			

63099



Magnetic anti-limestone handshower set
- Fixed hook
- Wall elbow
- 59" Cromalux flex hose
- Max flow rate 1.75 GPM

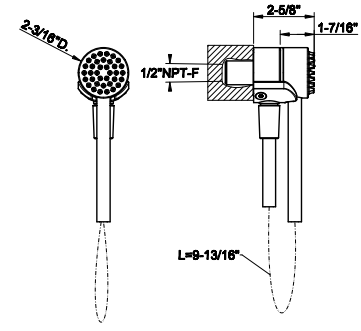

031	Chrome	1.213	726	Warm Bronze Br. PVD	1.916
149	Finox Br. Nickel	1.638	710	Brass PVD	1.794
299	Matte Black	1.638	727	Brass Br. PVD	1.916
720	Nickel PVD	1.794	246	Gold PVD	2.037
706	Black Metal PVD	1.794	716	Gold Br. PVD	2.037
707	Black Metal Br. PVD	1.916	187	Aged Bronze	1.916
030	Copper PVD	1.794	713	Antique Brass	1.916
708	Copper Br. PVD	1.916	845	Dark Bronze	1.916
735	Warm Bronze PVD	1.794			

63199



Magnetic anti-limestone handshower set
- Fixed hook
- Wall elbow
- 59" flex hose in black
- Max flow rate 1.75 GPM

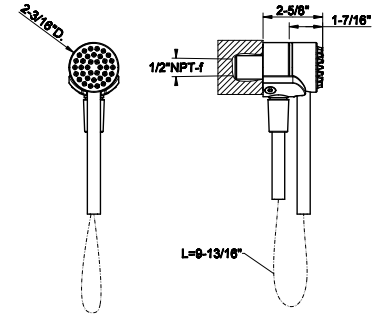

031	Chrome	1.213	726	Warm Bronze Br. PVD	1.916
149	Finox Br. Nickel	1.638	710	Brass PVD	1.794
299	Matte Black	1.638	727	Brass Br. PVD	1.916
720	Nickel PVD	1.794	246	Gold PVD	2.037
706	Black Metal PVD	1.794	716	Gold Br. PVD	2.037
707	Black Metal Br. PVD	1.916	187	Aged Bronze	1.916
030	Copper PVD	1.794	713	Antique Brass	1.916
708	Copper Br. PVD	1.916	845	Dark Bronze	1.916
735	Warm Bronze PVD	1.794			

HI-FI ECLECTIC

63057

Adjustable handshower hook

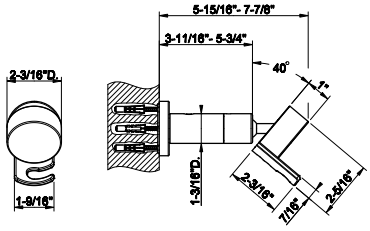



031	Chrome	1.150	726	Warm Bronze Br. PVD	1.816
149	Finox Br. Nickel	1.555	710	Brass PVD	1.701
299	Matte Black	1.555	727	Brass Br. PVD	1.816
720	Nickel PVD	1.701	246	Gold PVD	1.931
706	Black Metal PVD	1.701	716	Gold Br. PVD	1.931
707	Black Metal Br. PVD	1.816	187	Aged Bronze	1.816
030	Copper PVD	1.701	713	Antique Brass	1.816
708	Copper Br. PVD	1.816	845	Dark Bronze	1.816
735	Warm Bronze PVD	1.701			

SP03289

Push-botton plate with RAINFALL symbol. For Hi-Fi Eclectic.



031	Chrome	189	726	Warm Bronze Br. PVD	317
149	Finox Br. Nickel	256	710	Brass PVD	297
299	Matte Black	256	727	Brass Br. PVD	317
720	Nickel PVD	297	246	Gold PVD	335
706	Black Metal PVD	297	716	Gold Br. PVD	335
707	Black Metal Br. PVD	317	187	Aged Bronze	317
030	Copper PVD	297	713	Antique Brass	317
708	Copper Br. PVD	317	845	Dark Bronze	317
735	Warm Bronze PVD	297			

SP03292

Push-botton plate with WATERFALL symbol. For Hi-Fi Eclectic.



031	Chrome	189	726	Warm Bronze Br. PVD	317
149	Finox Br. Nickel	256	710	Brass PVD	297
299	Matte Black	256	727	Brass Br. PVD	317
720	Nickel PVD	297	246	Gold PVD	335
706	Black Metal PVD	297	716	Gold Br. PVD	335
707	Black Metal Br. PVD	317	187	Aged Bronze	317
030	Copper PVD	297	713	Antique Brass	317
708	Copper Br. PVD	317	845	Dark Bronze	317
735	Warm Bronze PVD	297			

SP03291

Push-botton plate with ATOMIZER symbol. For Hi-Fi Eclectic.



031	Chrome	189	726	Warm Bronze Br. PVD	317
149	Finox Br. Nickel	256	710	Brass PVD	297
299	Matte Black	256	727	Brass Br. PVD	317
720	Nickel PVD	297	246	Gold PVD	335
706	Black Metal PVD	297	716	Gold Br. PVD	335
707	Black Metal Br. PVD	317	187	Aged Bronze	317
030	Copper PVD	297	713	Antique Brass	317
708	Copper Br. PVD	317	845	Dark Bronze	317
735	Warm Bronze PVD	297			

SP03294

Push-botton plate with HANDSHOWER symbol. For Hi-Fi Eclectic.



031	Chrome	189	726	Warm Bronze Br. PVD	317
149	Finox Br. Nickel	256	710	Brass PVD	297
299	Matte Black	256	727	Brass Br. PVD	317
720	Nickel PVD	297	246	Gold PVD	335
706	Black Metal PVD	297	716	Gold Br. PVD	335
707	Black Metal Br. PVD	317	187	Aged Bronze	317
030	Copper PVD	297	713	Antique Brass	317
708	Copper Br. PVD	317	845	Dark Bronze	317
735	Warm Bronze PVD	297			

SP03295

Push-botton plate with BODY JETS symbol. For Hi-Fi Eclectic.



031	Chrome	189	726	Warm Bronze Br. PVD	317
149	Finox Br. Nickel	256	710	Brass PVD	297
299	Matte Black	256	727	Brass Br. PVD	317
720	Nickel PVD	297	246	Gold PVD	335
706	Black Metal PVD	297	716	Gold Br. PVD	335
707	Black Metal Br. PVD	317	187	Aged Bronze	317
030	Copper PVD	297	713	Antique Brass	317
708	Copper Br. PVD	317	845	Dark Bronze	317
735	Warm Bronze PVD	297			

SP03296

Push-botton plate with BATHTUB symbol. For Hi-Fi Eclectic.



031	Chrome	189	726	Warm Bronze Br. PVD	317
149	Finox Br. Nickel	256	710	Brass PVD	297
299	Matte Black	256	727	Brass Br. PVD	317
720	Nickel PVD	297	246	Gold PVD	335
706	Black Metal PVD	297	716	Gold Br. PVD	335
707	Black Metal Br. PVD	317	187	Aged Bronze	317
030	Copper PVD	297	713	Antique Brass	317
708	Copper Br. PVD	317	845	Dark Bronze	317
735	Warm Bronze PVD	297			

SP03298

Push-botton plate with FOOT SPOUT symbol. For Hi-Fi Eclectic.



031	Chrome	189	726	Warm Bronze Br. PVD	317
149	Finox Br. Nickel	256	710	Brass PVD	297
299	Matte Black	256	727	Brass Br. PVD	317
720	Nickel PVD	297	246	Gold PVD	335
706	Black Metal PVD	297	716	Gold Br. PVD	335
707	Black Metal Br. PVD	317	187	Aged Bronze	317
030	Copper PVD	297	713	Antique Brass	317
708	Copper Br. PVD	317	845	Dark Bronze	317
735	Warm Bronze PVD	297			

HI-FI ECLECTIC

SP03297

Push-button plate with WATER TUBE KNEIPP symbol



031	Chrome	189	726	Warm Bronze Br. PVD	317
149	Finox Br. Nickel	256	710	Brass PVD	297
299	Matte Black	256	727	Brass Br. PVD	317
720	Nickel PVD	297	246	Gold PVD	335
706	Black Metal PVD	297	716	Gold Br. PVD	335
707	Black Metal Br. PVD	317	187	Aged Bronze	317
030	Copper PVD	297	713	Antique Brass	317
708	Copper Br. PVD	317	845	Dark Bronze	317
735	Warm Bronze PVD	297			

SP03293

Push-botton plate with WALL-MOUNTED WATERFALL symbol. For Hi-Fi Eclectic.



031	Chrome	189	726	Warm Bronze Br. PVD	317
149	Finox Br. Nickel	256	710	Brass PVD	297
299	Matte Black	256	727	Brass Br. PVD	317
720	Nickel PVD	297	246	Gold PVD	335
706	Black Metal PVD	297	716	Gold Br. PVD	335
707	Black Metal Br. PVD	317	187	Aged Bronze	317
030	Copper PVD	297	713	Antique Brass	317
708	Copper Br. PVD	317	845	Dark Bronze	317
735	Warm Bronze PVD	297			

SP03290

Push-botton plate with WALL-MOUNTED ATOMIZER symbol. For Hi-Fi Eclectic.



031	Chrome	189	726	Warm Bronze Br. PVD	317
149	Finox Br. Nickel	256	710	Brass PVD	297
299	Matte Black	256	727	Brass Br. PVD	317
720	Nickel PVD	297	246	Gold PVD	335
706	Black Metal PVD	297	716	Gold Br. PVD	335
707	Black Metal Br. PVD	317	187	Aged Bronze	317
030	Copper PVD	297	713	Antique Brass	317
708	Copper Br. PVD	317	845	Dark Bronze	317
735	Warm Bronze PVD	297			


GESSI
AFILO



57301

Built-in shower system
• 15-9/16”
• RAINFALL function and chromotherapy effect
• 1/2” connections
• Max Flow rate 1.75 GPM with RIR5404 reducer (to be purchased separately)
• Electronic parts included with remote watertight control and hook
• 12V power supply 01723 required, not included to be purchased separately
• Ceiling installation
• To be complemented by cover 57002

279	Matte White	7.373

57002

Cover for 12” shower system

239	Steel Br.	1.408	**726**	Warm Bronze Br. PVD	3.722
238	Mirror Steel	1.408	**710**	Brass PVD	3.486
299	Matte Black	1.900	**727**	Brass Br. PVD	3.722
720	Nickel PVD	3.486	**246**	Gold PVD	3.959
706	Black Metal PVD	3.486	**716**	Gold Br. PVD	3.959
707	Black Metal Br. PVD	3.722	**845**	Dark Bronze	3.722
030	Copper PVD	3.486	**187**	Aged Bronze	3.722
708	Copper Br. PVD	3.722	**713**	Antique Brass	3.722
735	Warm Bronze PVD	3.486	**279**	Matte White	1.900

57301+57002

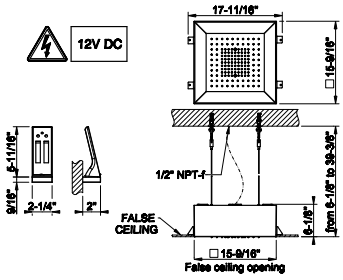

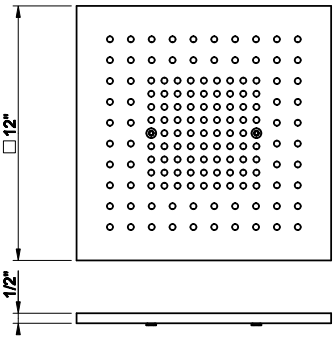

AFILO

57303+57002

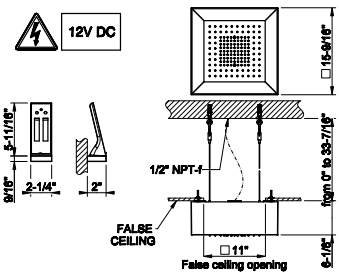

57303

Surface mounted shower system
- 15-9/16”
- RAINFALL function and chromotherapy effect
- 1/2” connections
- Max Flow rate 1.75 GPM with RIR5404 reducer (to be purchased separately)
- Electronic parts included with remote watertight control and hook
- 12V power supply 01723 required, not included to be purchased separately
- Ceiling installation, with white frame
- To be complementedby cover57002

279	Matte White	7.070

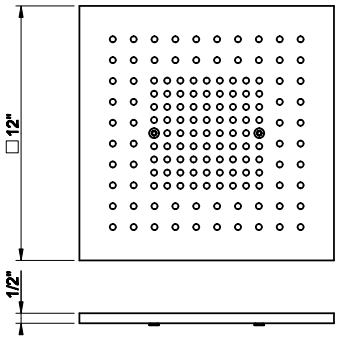

57002

Cover for 12” shower system

239	Steel Br.	1.408	**726**	Warm Bronze Br. PVD	3.722
238	Mirror Steel	1.408	**710**	Brass PVD	3.486
299	Matte Black	1.900	**727**	Brass Br. PVD	3.722
720	Nickel PVD	3.486	**246**	Gold PVD	3.959
706	Black Metal PVD	3.486	**716**	Gold Br. PVD	3.959
707	Black Metal Br. PVD	3.722	**845**	Dark Bronze	3.722
030	Copper PVD	3.486	**187**	Aged Bronze	3.722
708	Copper Br. PVD	3.722	**713**	Antique Brass	3.722
735	Warm Bronze PVD	3.486	**279**	Matte White	1.900





57305

Built-in shower multifunction system
• 15-9/16”
• RAINFALL/WATERFALL function and chromotherapy effect
• 1/2” connections
• Max Flowrate 1.75 GPM with RIR5404 reducer for single exit (to be purchased separately)
• 2 Flow restriction fitting RIR5404 to be purchasedseparately
• Electronic parts included with remote watertight control and hook
• 12V power supply 01723 required, not includedto be purchased separately
• Ceiling installation
• To be complemented by cover 57004

279	Matte White	7.678

57305+57004

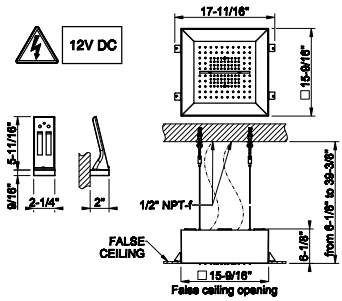

57004

Cover for 12” multifunction system

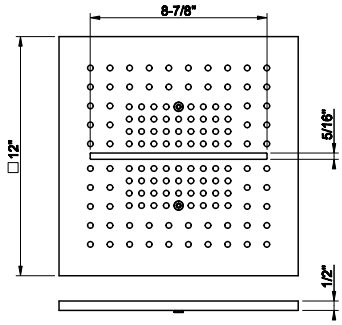

239	Steel Br.	1.408	**726**	Warm Bronze Br. PVD	3.722
238	Mirror Steel	1.408	**710**	Brass PVD	3.486
299	Matte Black	1.900	**727**	Brass Br. PVD	3.722
720	Nickel PVD	3.486	**246**	Gold PVD	3.959
706	Black Metal PVD	3.486	**716**	Gold Br. PVD	3.959
707	Black Metal Br. PVD	3.722	**845**	Dark Bronze	3.722
030	Copper PVD	3.486	**187**	Aged Bronze	3.722
708	Copper Br. PVD	3.722	**713**	Antique Brass	3.722
735	Warm Bronze PVD	3.486	**279**	Matte White	1.900

57307+57004

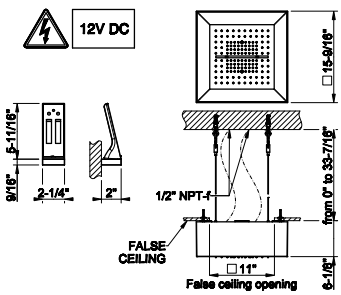

57307

Surface mounted multifunction shower system
- 15-9/16”
- RAINFALL/WATERFALL function and chromotherapy effect
- 1/2” connections
- Max Flow rate 1.75 GPM with RIR5404 reducer for single exit (to be purchased separately)
- 2 Flow restriction fitting RIR5404 to be purchased separately
- Electronic parts included with remote watertight control and hook
- 12V power supply 01723 required, notincluded to be purchased separately
- Ceiling installation, with white frame
- To be complemented by cover 57004

279	Matte White	7.335

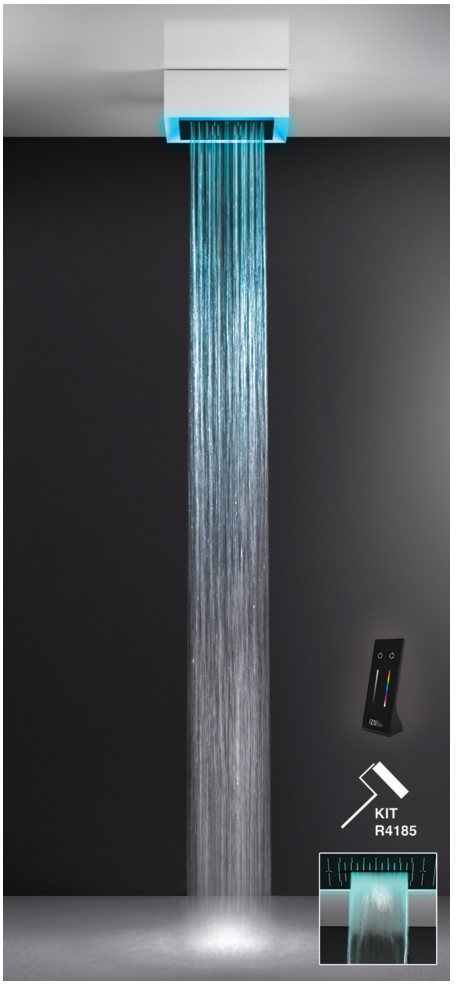

57004

Cover for 12” multifunction system

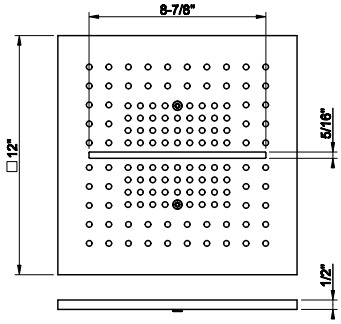

239	Steel Br.	1.408	**726**	Warm Bronze Br. PVD	3.722
238	Mirror Steel	1.408	**710**	Brass PVD	3.486
299	Matte Black	1.900	**727**	Brass Br. PVD	3.722
720	Nickel PVD	3.486	**246**	Gold PVD	3.959
706	Black Metal PVD	3.486	**716**	Gold Br. PVD	3.959
707	Black Metal Br. PVD	3.722	**845**	Dark Bronze	3.722
030	Copper PVD	3.486	**187**	Aged Bronze	3.722
708	Copper Br. PVD	3.722	**713**	Antique Brass	3.722
735	Warm Bronze PVD	3.486	**279**	Matte White	1.900



57401

Built-in shower system
• 15-9/16” x 23-7/16”
• RAINFALL function and chromotherapy effect
• 1/2” connections
• Max Flow rate 1.75 GPM with RIR5404 reducer (to be purchased separately)
• Electronic parts included with remote watertight control and hook
• 12V power supply 01723 required, not included to be purchased separately
• Ceiling installation
• To be complemented by cover57006

279	Matte White	8.829

57006

Cover for 12” x 19-7/8” shower system

239	Steel Br.	1.629	**726**	Warm Bronze Br. PVD	3.950
238	Mirror Steel	1.629	**710**	Brass PVD	3.699
299	Matte Black	2.198	**727**	Brass Br. PVD	3.950
720	Nickel PVD	3.699	**246**	Gold PVD	4.199
706	Black Metal PVD	3.699	**716**	Gold Br. PVD	4.199
707	Black Metal Br. PVD	3.950	**845**	Dark Bronze	3.950
030	Copper PVD	3.699	**187**	Aged Bronze	3.950
708	Copper Br. PVD	3.950	**713**	Antique Brass	3.950
735	Warm Bronze PVD	3.699	**279**	Matte White	2.198

57401+57006

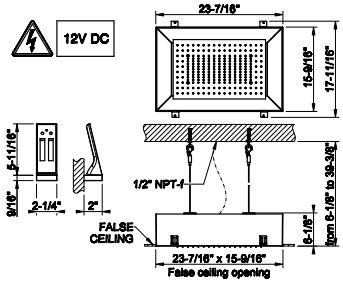

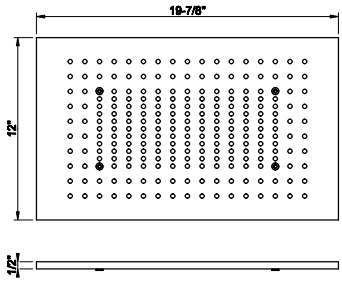

57403+57006

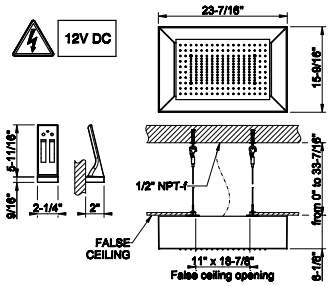

57403

Surface mounted shower system
- 15-9/16” x 23-7/16”
- RAINFALL function and chromotherapy effect
- 1/2” connections
- Max Flow rate1.75 GPM with RIR5404 reducer (to be purchased separately)
- Electronic parts included with remote watertight control and hook
- 12V power supply 01723 required, not included to be purchased separately
- Ceiling installation, with white frame
- To becomplemented by cover 57006

279	Matte White	8.490



57006

Cover for 12” x 19-7/8” shower system

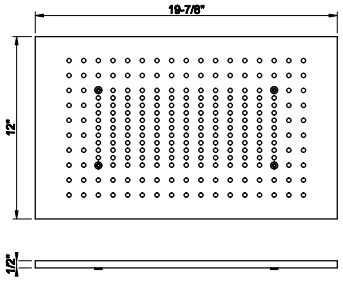

239	Steel Br.	1.629	**726**	Warm Bronze Br. PVD	3.950
238	Mirror Steel	1.629	**710**	Brass PVD	3.699
299	Matte Black	2.198	**727**	Brass Br. PVD	3.950
720	Nickel PVD	3.699	**246**	Gold PVD	4.199
706	Black Metal PVD	3.699	**716**	Gold Br. PVD	4.199
707	Black Metal Br. PVD	3.950	**845**	Dark Bronze	3.950
030	Copper PVD	3.699	**187**	Aged Bronze	3.950
708	Copper Br. PVD	3.950	**713**	Antique Brass	3.950
735	Warm Bronze PVD	3.699	**279**	Matte White	2.198



57409

Built-in multifunction shower system
• 15-9/16” x 23-7/16”
• RAINFALL/WATERFALL/MIST function and chromotherapy effect
• 1/2” connections
• Max Flow rate 1.75 GPM with RIR5404 reducer for single exit (to be purchased separately)
• Electronic parts included withremote watertight control and hook
• 12V power supply 01723 required, not included to be purchased separately
• Ceiling installation
• To be complemented by cover 57010

279	Matte White	9.406

57409+57010

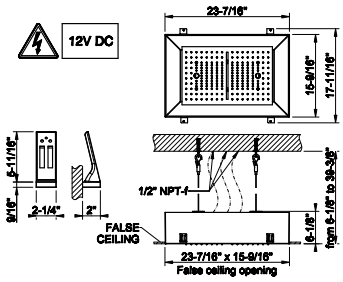

57010

Cover for 12” x 19-7/8” multifunction system

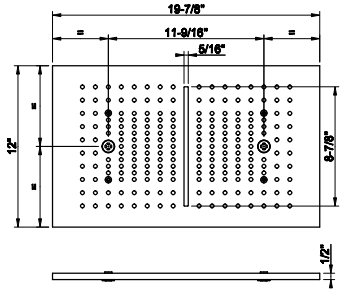

239	Steel Br.	1.629	**726**	Warm Bronze Br. PVD	3.950
238	Mirror Steel	1.629	**710**	Brass PVD	3.699
299	Matte Black	2.198	**727**	Brass Br. PVD	3.950
720	Nickel PVD	3.699	**246**	Gold PVD	4.199
706	Black Metal PVD	3.699	**716**	Gold Br. PVD	4.199
707	Black Metal Br. PVD	3.950	**845**	Dark Bronze	3.950
030	Copper PVD	3.699	**187**	Aged Bronze	3.950
708	Copper Br. PVD	3.950	**713**	Antique Brass	3.950
735	Warm Bronze PVD	3.699	**279**	Matte White	2.198

57411+57010

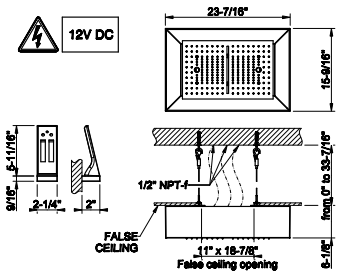

57411

Surface mounted multifunction shower system
• 15-9/16” x 23-7/16”
• RAINFALL/WATERFALL/MIST function and chromotherapy effect
• 1/2connections
• Max Flow rate 1.75 GPM with RIR5404 reducer for single exit (to be purchased separately)
• Electronic parts includedwith remote watertight control and hook
• 12V power supply 01723 required, not included to be purchased separately
•Ceiling installation, with white frame
• To be complemented by cover 57010

279	Matte White	9.066

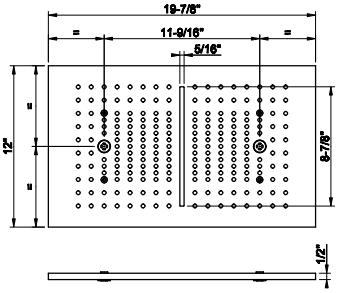

57010

Cover for 12” x 19-7/8” multifunction system

239	Steel Br.	1.629	**726**	Warm Bronze Br. PVD	3.950
238	Mirror Steel	1.629	**710**	Brass PVD	3.699
299	Matte Black	2.198	**727**	Brass Br. PVD	3.950
720	Nickel PVD	3.699	**246**	Gold PVD	4.199
706	Black Metal PVD	3.699	**716**	Gold Br. PVD	4.199
707	Black Metal Br. PVD	3.950	**845**	Dark Bronze	3.950
030	Copper PVD	3.699	**187**	Aged Bronze	3.950
708	Copper Br. PVD	3.950	**713**	Antique Brass	3.950
735	Warm Bronze PVD	3.699	**279**	Matte White	2.198





57501

Built-in shower system
• 23-7/16”
• RAINFALL function and chromotherapy effect
• 1/2” connections
• Max Flow rate 1.75 GPM with RIR5404 reducer (to be purchased separately)
• Electronic parts included with remote watertight control and hook
• 12V power supply 01723 required, not included to be purchased separately
• Ceiling installation
• To be complemented by cover 57012

279	Matte White	9.663

57012

Cover for 19-7/8” shower system

239	Steel Br.	1.843	**726**	Warm Bronze Br. PVD	4.361
238	Mirror Steel	1.843	**710**	Brass PVD	4.085
299	Matte Black	2.487	**727**	Brass Br. PVD	4.361
720	Nickel PVD	4.085	**246**	Gold PVD	4.637
706	Black Metal PVD	4.085	**716**	Gold Br. PVD	4.637
707	Black Metal Br. PVD	4.361	**845**	Dark Bronze	4.361
030	Copper PVD	4.085	**187**	Aged Bronze	4.361
708	Copper Br. PVD	4.361	**713**	Antique Brass	4.361
735	Warm Bronze PVD	4.085	**279**	Matte White	2.487

57501+57012

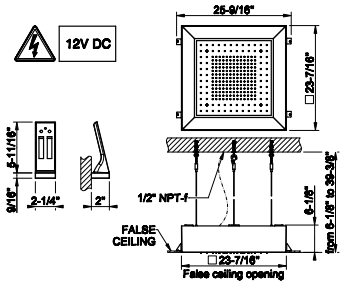

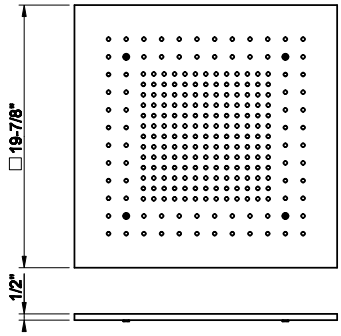

57503+57012

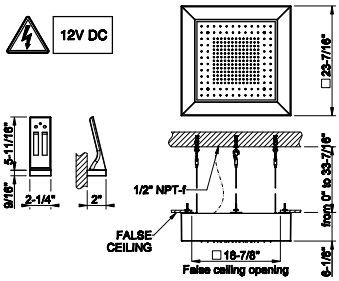

57503

Surface mounted shower system
- 23-7/16”
- RAINFALL function and chromotherapy effect
- 1/2” connections
- Max Flow rate 1.75 GPM with R5404 reducer (to be purchased separately)
- Electronic parts included with remote watertight control and hook
- 12V power supply R5402 required, not included to be purchased separately
- Ceiling installation, with white frame
- To be complementedby cover 57012

279	Matte White	9.355

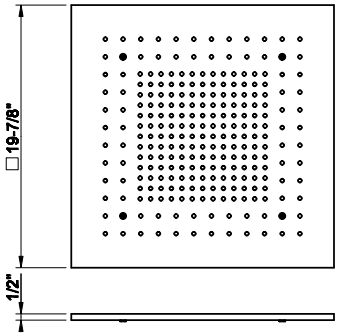

57012

Cover for 19-7/8” shower system

239	Steel Br.	1.843	**726**	Warm Bronze Br. PVD	4.361
238	Mirror Steel	1.843	**710**	Brass PVD	4.085
299	Matte Black	2.487	**727**	Brass Br. PVD	4.361
720	Nickel PVD	4.085	**246**	Gold PVD	4.637
706	Black Metal PVD	4.085	**716**	Gold Br. PVD	4.637
707	Black Metal Br. PVD	4.361	**845**	Dark Bronze	4.361
030	Copper PVD	4.085	**187**	Aged Bronze	4.361
708	Copper Br. PVD	4.361	**713**	Antique Brass	4.361
735	Warm Bronze PVD	4.085	**279**	Matte White	2.487





57509

Built-in multifunction shower system
• 23-7/16”
• RAINFALL/WATERFALL/MIST function and chromotherapy effect
• 1/2” connections
• MaxFlow rate 1.75 GPM with RIR5404 reducer for single exit (to be purchased separately)
• Electronic parts included with remote watertight control and hook
• 12V power supply 01723 required, not included to be purchased separately
• Ceiling installation
• To becomplemented by cover 57016

279	Matte White	10.239

57509+57016

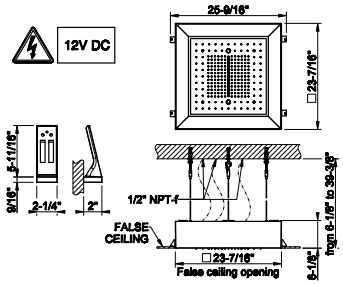

57016

Cover for 19-7/8” multifunction system

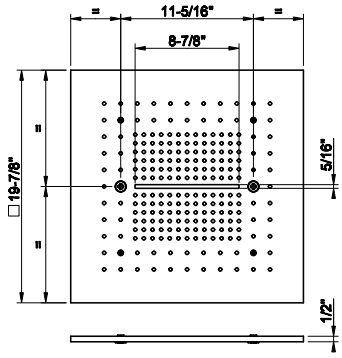

239	Steel Br.	1.843	**726**	Warm Bronze Br. PVD	4.361
238	Mirror Steel	1.843	**710**	Brass PVD	4.085
299	Matte Black	2.487	**727**	Brass Br. PVD	4.361
720	Nickel PVD	4.085	**246**	Gold PVD	4.637
706	Black Metal PVD	4.085	**716**	Gold Br. PVD	4.637
707	Black Metal Br. PVD	4.361	**845**	Dark Bronze	4.361
030	Copper PVD	4.085	**187**	Aged Bronze	4.361
708	Copper Br. PVD	4.361	**713**	Antique Brass	4.361
735	Warm Bronze PVD	4.085	**279**	Matte White	2.487

57511+57016

57511

Surface mounted multifunction shower system
• 23-7/16”
• RAINFALL/WATERFALL/MIST function and chromotherapy effect
• 1/2” connections
• Max Flow rate 1.75 GPM with RIR5404 reducer for single exit (to be purchased separately)
• Electronic parts included with remote watertight control and hook
• 12V power supply 01723 required, not included to be purchased separately
• Ceiling installation,with white frame
• To be complemented by cover 57016

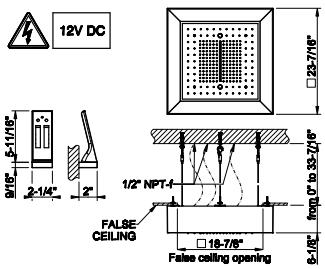

279	Matte White	9.933

57016

Cover for 19-7/8” multifunction system

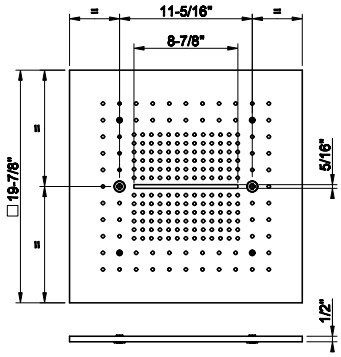

239	Steel Br.	1.843	**726**	Warm Bronze Br. PVD	4.361
238	Mirror Steel	1.843	**710**	Brass PVD	4.085
299	Matte Black	2.487	**727**	Brass Br. PVD	4.361
720	Nickel PVD	4.085	**246**	Gold PVD	4.637
706	Black Metal PVD	4.085	**716**	Gold Br. PVD	4.637
707	Black Metal Br. PVD	4.361	**845**	Dark Bronze	4.361
030	Copper PVD	4.085	**187**	Aged Bronze	4.361
708	Copper Br. PVD	4.361	**713**	Antique Brass	4.361
735	Warm Bronze PVD	4.085	**279**	Matte White	2.487





57601

Built-in shower system
• Ø14”
• RAINFALL function and chromotherapy effect
• 1/2” connections
• Max Flow rate 1.75 GPM with RIR5404reducer (to be purchased separately)
• Electronic parts included with remote watertight control and hook
• 12Vpower supply 01723required, not included to be purchased separately
• Ceiling installation
• To be complemented by cover 57018

279	Matte White	7.387

57018

Cover for Ø14” shower system

239	Steel Br.	1.408	**726**	Warm Bronze Br. PVD	3.722
238	Mirror Steel	1.408	**710**	Brass PVD	3.486
299	Matte Black	1.900	**727**	Brass Br. PVD	3.722
720	Nickel PVD	3.486	**246**	Gold PVD	3.959
706	Black Metal PVD	3.486	**716**	Gold Br. PVD	3.959
707	Black Metal Br. PVD	3.722	**845**	Dark Bronze	3.722
030	Copper PVD	3.486	**187**	Aged Bronze	3.722
708	Copper Br. PVD	3.722	**713**	Antique Brass	3.722
735	Warm Bronze PVD	3.486	**279**	Matte White	1.900

57601+57018

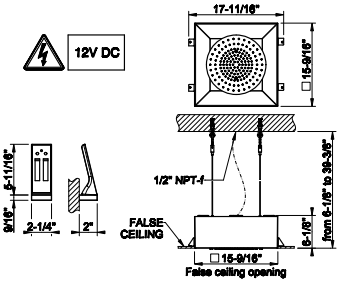

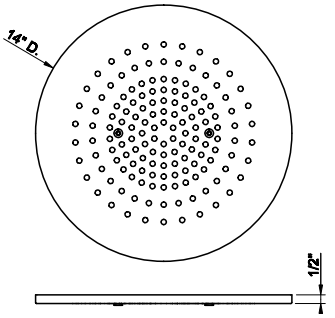

57603+57018

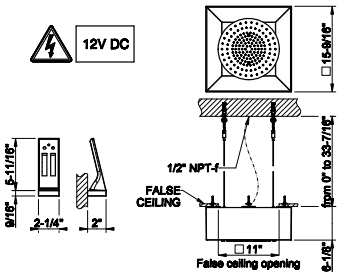

57603

Surface mounted shower system
• Ø14”
• RAINFALL function and chromotherapy effect
• 1/2” connections
• Max Flow rate 1.75 GPM with RIR5404 reducer (to be purchased separately)
• Electronic parts included with remote watertight control and hook
• 12V power supply01723 required, not included to be purchased separately
• Ceiling installation, with white frame
• To be complementedbycover 5718

279	Matte White	7.043



57018

Cover for Ø14” shower system

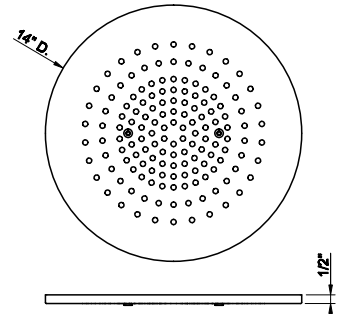

239	Steel Br.	1.408	**726**	Warm Bronze Br. PVD	3.722
238	Mirror Steel	1.408	**710**	Brass PVD	3.486
299	Matte Black	1.900	**727**	Brass Br. PVD	3.722
720	Nickel PVD	3.486	**246**	Gold PVD	3.959
706	Black Metal PVD	3.486	**716**	Gold Br. PVD	3.959
707	Black Metal Br. PVD	3.722	**845**	Dark Bronze	3.722
030	Copper PVD	3.486	**187**	Aged Bronze	3.722
708	Copper Br. PVD	3.722	**713**	Antique Brass	3.722
735	Warm Bronze PVD	3.486	**279**	Matte White	1.900

01723

Power supply CE 30 Watt DIN Rail. Input voltage 100-240VAC. Output voltage 12VDC.



238	Mirror Steel	496

RIR5403

Optional kit PIR motion sensor with IP connector for automatic chromotherapy function activation.



238	Mirror Steel	1.967

01720

Optional kit capacitive keyboard for chromotherapy control with IP connector.



239	Steel Br.	1.214	**726**	Warm Bronze Br. PVD	1.581
238	Mirror Steel	1.214	**710**	Brass PVD	1.581
299	Matte Black	1.518	**727**	Brass Br. PVD	1.581
720	Nickel PVD	1.412	**246**	Gold PVD	1.738
706	Black Metal PVD	1.581	**716**	Gold Br. PVD	1.738
707	Black Metal Br. PVD	1.581	**845**	Dark Bronze	1.651
030	Copper PVD	1.581	**187**	Aged Bronze	1.581
708	Copper Br. PVD	1.581	**713**	Antique Brass	1.581
735	Warm Bronze PVD	1.581	**279**	Matte White	1.518

01722

Optional kit connectors for more control units for ceiling-mounted shower systems



238	Mirror Steel	436

RIR5404

Kit 1/2”NPT f – 1/2”NPT m - 1.75 GPM for Shower System

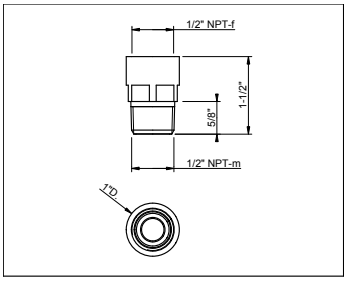



031	Chrome	75

01710

Roller + rod kit for shower head maintenance

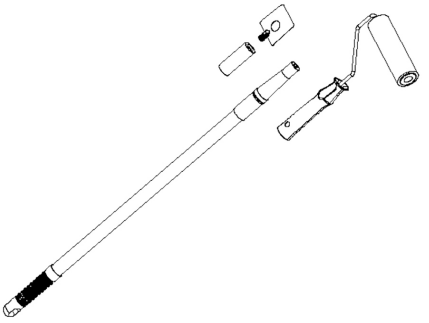

031	Chrome	298

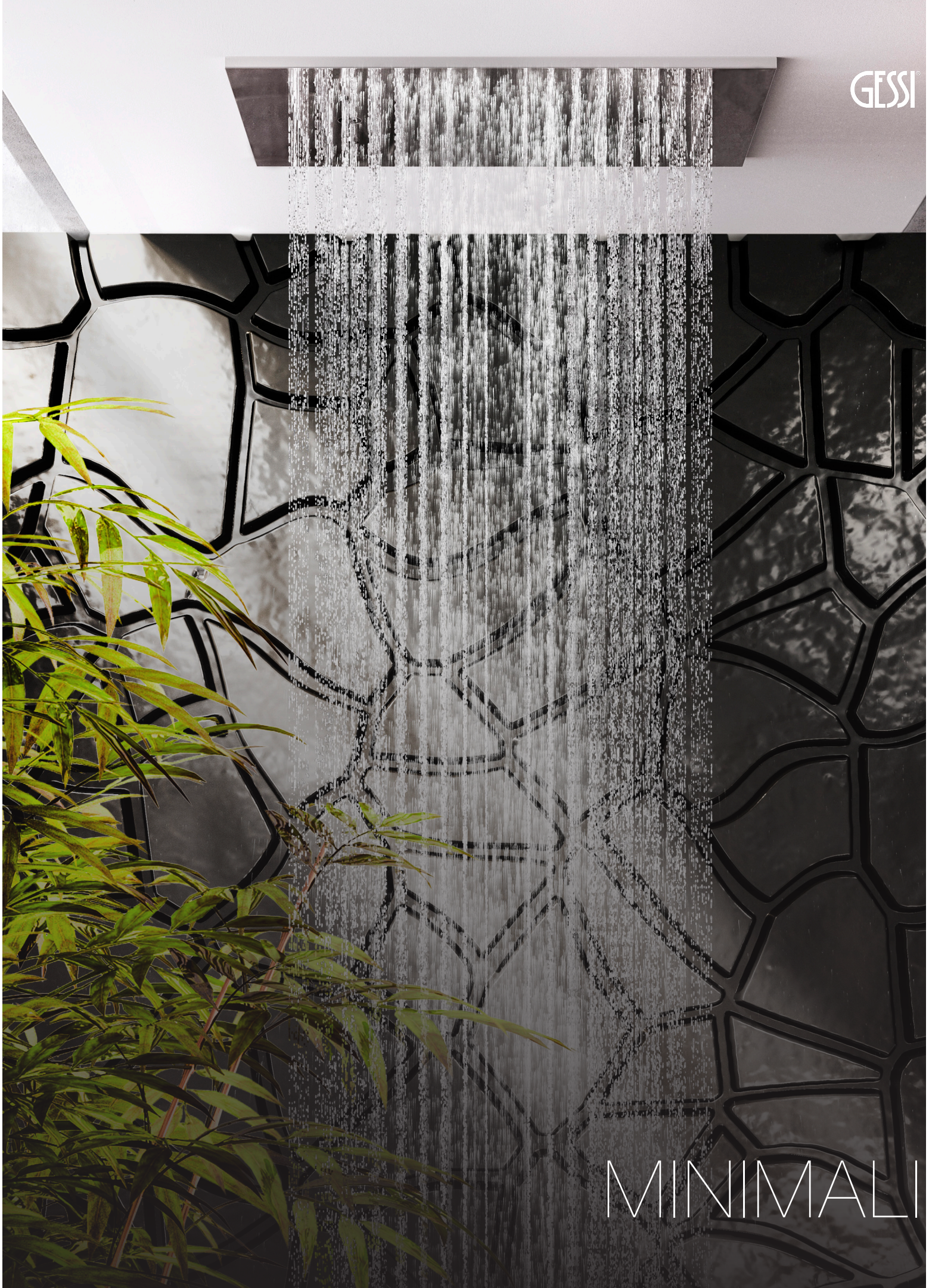
GESSI
MINIMALI



57801

57801+57871

Shower system for ceiling installation
- 13-3/4”
- RAINFALL function
- 1/2” connections
- Max Flow rate 1.75 GPM with R5404 reducer (to be purchased separately)
- To be complemented by cover 57871

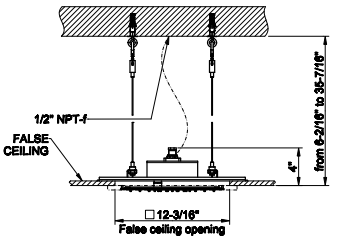

238	Mirror Steel	3.201

57871

Cover for 13-3/4” shower system.

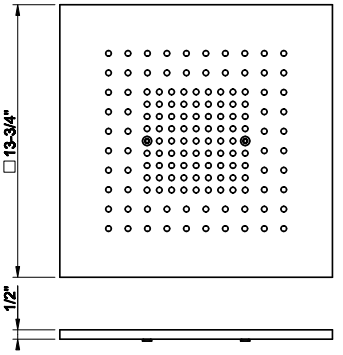

239	Steel Br.	1.408	**726**	Warm Bronze Br. PVD	3.722
238	Mirror Steel	1.408	**710**	Brass PVD	3.486
299	Matte Black	1.900	**727**	Brass Br. PVD	3.722
720	Nickel PVD	3.486	**246**	Gold PVD	3.959
706	Black Metal PVD	3.486	**716**	Gold Br. PVD	3.959
707	Black Metal Br. PVD	3.722	**845**	Dark Bronze	3.722
030	Copper PVD	3.486	**187**	Aged Bronze	3.722
708	Copper Br. PVD	3.722	**713**	Antique Brass	3.722
735	Warm Bronze PVD	3.486	**279**	Matte White	1.900

57807+57875

57807

Multifunction system for ceiling installation
• 13-3/4”
• RAINFALL/WATERFALL/MIST functions
• 1/2” connections
• Max Flow rate 1.75GPM with R5404 reducer for single exit (to be purchased separately)
• To be complemented by cover 57875

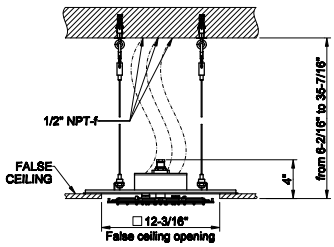

238	Mirror Steel	3.594

57875

Cover for 13-3/4” multifunction system.

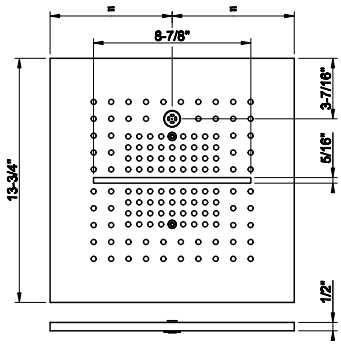

239	Steel Br.	1.408	**726**	Warm Bronze Br. PVD	3.722
238	Mirror Steel	1.408	**710**	Brass PVD	3.486
299	Matte Black	1.900	**727**	Brass Br. PVD	3.722
720	Nickel PVD	3.486	**246**	Gold PVD	3.959
706	Black Metal PVD	3.486	**716**	Gold Br. PVD	3.959
707	Black Metal Br. PVD	3.722	**845**	Dark Bronze	3.722
030	Copper PVD	3.486	**187**	Aged Bronze	3.722
708	Copper Br. PVD	3.722	**713**	Antique Brass	3.722
735	Warm Bronze PVD	3.486	**279**	Matte White	1.900





57805

57805+57006

Shower system for ceiling installation
- 12”x19-7/8”
- RAINFALL function
- 1/2” connections
- Max Flow rate 1.75 GPM with R5404 reducer (to be purchased separately)
- To be complemented by cover 57006

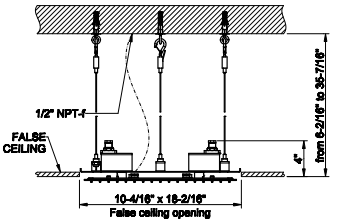

238	Mirror Steel	4.419

57006

Cover for 12” x 19-7/8” shower system

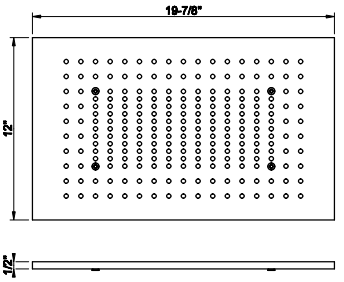

239	Steel Br.	1.629	**726**	Warm Bronze Br. PVD	3.950
238	Mirror Steel	1.629	**710**	Brass PVD	3.699
299	Matte Black	2.198	**727**	Brass Br. PVD	3.950
720	Nickel PVD	3.699	**246**	Gold PVD	4.199
706	Black Metal PVD	3.699	**716**	Gold Br. PVD	4.199
707	Black Metal Br. PVD	3.950	**845**	Dark Bronze	3.950
030	Copper PVD	3.699	**187**	Aged Bronze	3.950
708	Copper Br. PVD	3.950	**713**	Antique Brass	3.950
735	Warm Bronze PVD	3.699	**279**	Matte White	2.198

57811+57010

57811

Multifunction system for ceiling installation
• 12”x19-7/8”
• RAINFALL/WATERFALL/MIST functions
• 1/2” connections
• Max Flow rate 1.75 GPM with R5404 reducer for single exit (to be purchased separately)
• To be complemented by cover 57010

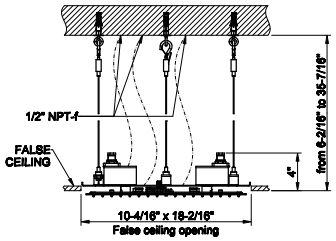

238	Mirror Steel	5.046

57010

Cover for 12” x 19-7/8” multifunction system

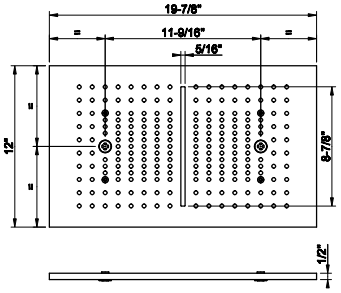

239	Steel Br.	1.629	**726**	Warm Bronze Br. PVD	3.950
238	Mirror Steel	1.629	**710**	Brass PVD	3.699
299	Matte Black	2.198	**727**	Brass Br. PVD	3.950
720	Nickel PVD	3.699	**246**	Gold PVD	4.199
706	Black Metal PVD	3.699	**716**	Gold Br. PVD	4.199
707	Black Metal Br. PVD	3.950	**845**	Dark Bronze	3.950
030	Copper PVD	3.699	**187**	Aged Bronze	3.950
708	Copper Br. PVD	3.950	**713**	Antique Brass	3.950
735	Warm Bronze PVD	3.699	**279**	Matte White	2.198





57901

Shower system for ceiling installation
- 19-7/8”
- RAINFALL function
- 1/2” connections
- Max Flow rate 1.75 GPM with R5404 reducer (to be purchased separately)
- To be complemented by cover 57012

238	Mirror Steel	4.830

57901+57012

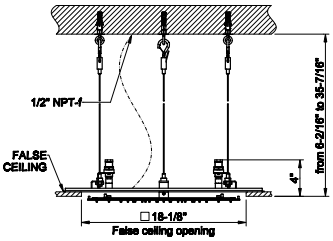

57012

Cover for 19-7/8” shower system

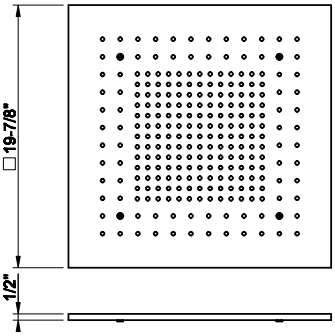

239	Steel Br.	1.843	**726**	Warm Bronze Br. PVD	4.361
238	Mirror Steel	1.843	**710**	Brass PVD	4.085
299	Matte Black	2.487	**727**	Brass Br. PVD	4.361
720	Nickel PVD	4.085	**246**	Gold PVD	4.637
706	Black Metal PVD	4.085	**716**	Gold Br. PVD	4.637
707	Black Metal Br. PVD	4.361	**845**	Dark Bronze	4.361
030	Copper PVD	4.085	**187**	Aged Bronze	4.361
708	Copper Br. PVD	4.361	**713**	Antique Brass	4.361
735	Warm Bronze PVD	4.085	**279**	Matte White	2.487

57907+57016

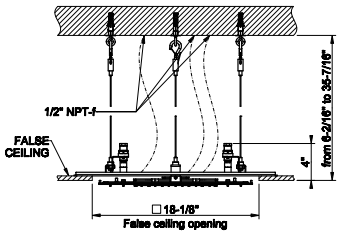

57907

Multifunction system for ceiling installation
- 19-7/8”
- RAINFALL/WATERFALL/MIST functions
- 1/2” connections
- Max Flow rate 1.75 GPM with R5404 reducer for single exit (to be purchased separately)
- To be complemented by cover 57016

238	Mirror Steel	5.460

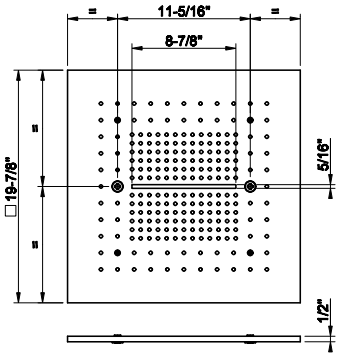

57016

Cover for 19-7/8” multifunction system

239	Steel Br.	1.843	**726**	Warm Bronze Br. PVD	4.361
238	Mirror Steel	1.843	**710**	Brass PVD	4.085
299	Matte Black	2.487	**727**	Brass Br. PVD	4.361
720	Nickel PVD	4.085	**246**	Gold PVD	4.637
706	Black Metal PVD	4.085	**716**	Gold Br. PVD	4.637
707	Black Metal Br. PVD	4.361	**845**	Dark Bronze	4.361
030	Copper PVD	4.085	**187**	Aged Bronze	4.361
708	Copper Br. PVD	4.361	**713**	Antique Brass	4.361
735	Warm Bronze PVD	4.085	**279**	Matte White	2.487





57803

57803+57018

Shower system for ceiling installation
- Ø14”
- RAINFALL function
- 1/2” connections
- Max Flow rate 1.75 GPM with R5404 reducer (to be purchased separately)
- To be complemented by cover 57018

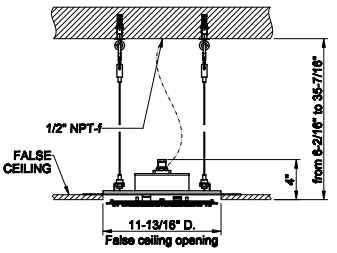

238	Mirror Steel	3.209

57018

Cover for Ø14” shower system

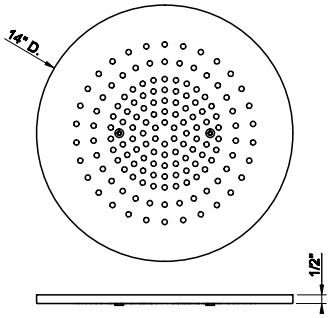

239	Steel Br.	1.408	**726**	Warm Bronze Br. PVD	3.722
238	Mirror Steel	1.408	**710**	Brass PVD	3.486
299	Matte Black	1.900	**727**	Brass Br. PVD	3.722
720	Nickel PVD	3.486	**246**	Gold PVD	3.959
706	Black Metal PVD	3.486	**716**	Gold Br. PVD	3.959
707	Black Metal Br. PVD	3.722	**845**	Dark Bronze	3.722
030	Copper PVD	3.486	**187**	Aged Bronze	3.722
708	Copper Br. PVD	3.722	**713**	Antique Brass	3.722
735	Warm Bronze PVD	3.486	**279**	Matte White	1.900

57809+57873

57809

Multifunction system for ceiling installation
• Ø14”
• RAINFALL/WATERFALL/MIST functions
• 1/2” connections
• Max Flow rate 1.75 GPMwith R5404 reducer for single exit (to be purchased separately)
• To be complemented by cover 57873

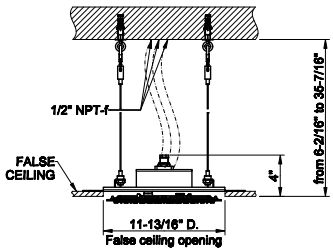

238	Mirror Steel	3.602

57873

Cover for Ø14” multifunction system.

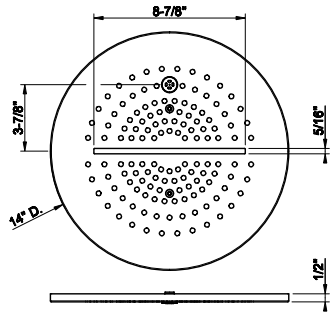

239	Steel Br.	1.408	**726**	Warm Bronze Br. PVD	3.722
238	Mirror Steel	1.408	**710**	Brass PVD	3.486
299	Matte Black	1.900	**727**	Brass Br. PVD	3.722
720	Nickel PVD	3.486	**246**	Gold PVD	3.959
706	Black Metal PVD	3.486	**716**	Gold Br. PVD	3.959
707	Black Metal Br. PVD	3.722	**845**	Dark Bronze	3.722
030	Copper PVD	3.486	**187**	Aged Bronze	3.722
708	Copper Br. PVD	3.722	**713**	Antique Brass	3.722
735	Warm Bronze PVD	3.486	**279**	Matte White	1.900



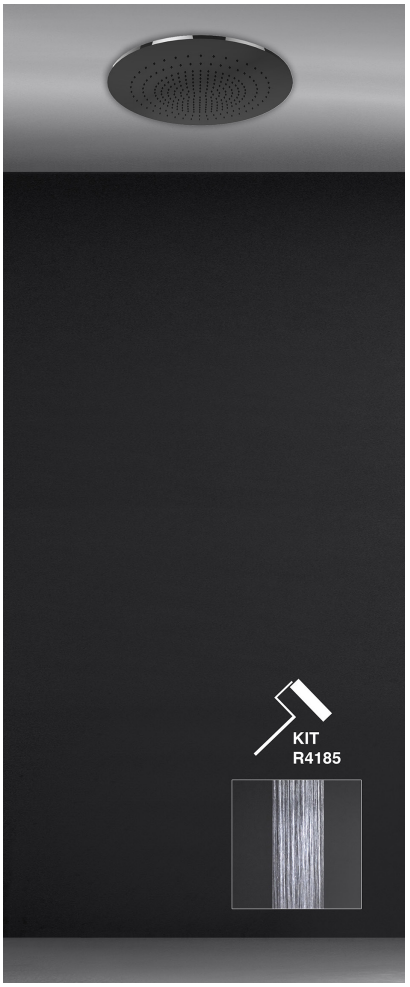

57903

57903+57973

Shower system for ceiling installation
- Ø19-3/4”
- RAINFALL function
- 1/2” connections
- Max Flow rate 1.75 GPM with R5404 reducer (to be purchased separately)
- To be complemented by cover 57973

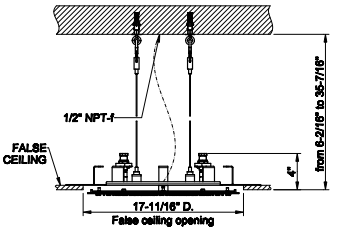

238	Mirror Steel	4.730

57973

Cover for Ø19-3/4” shower system.

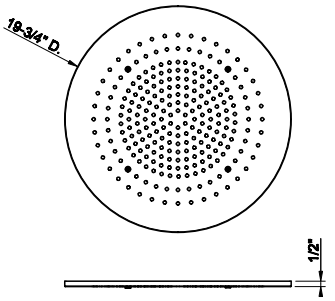

239	Steel Br.	1.845	**726**	Warm Bronze Br. PVD	4.361
238	Mirror Steel	1.845	**710**	Brass PVD	4.085
299	Matte Black	2.490	**727**	Brass Br. PVD	4.361
720	Nickel PVD	4.085	**246**	Gold PVD	4.637
706	Black Metal PVD	4.085	**716**	Gold Br. PVD	4.637
707	Black Metal Br. PVD	4.361	**845**	Dark Bronze	4.361
030	Copper PVD	4.085	**187**	Aged Bronze	4.361
708	Copper Br. PVD	4.361	**713**	Antique Brass	4.361
735	Warm Bronze PVD	4.085	**279**	Matte White	2.490

57909+57975

57909

Multifunction system for ceiling installation
• Ø19-3/4”
• RAINFALL/WATERFALL/MIST functions
• 1/2” connections
• Max Flow rate 1.75 GPM with R5404 reducer for single exit (to be purchased separately)
• To be complemented by cover 57975

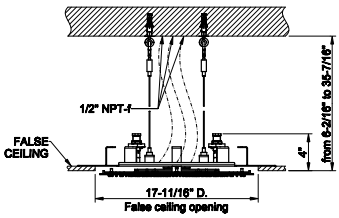

238	Mirror Steel	5.358



57975

Cover for Ø19-3/4” multifunction system.

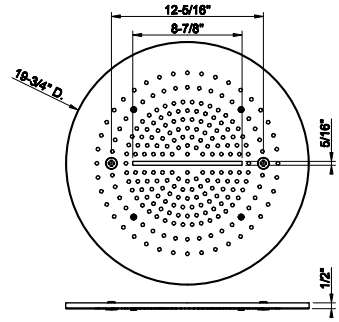

239	Steel Br.	1.845	**726**	Warm Bronze Br. PVD	4.361
238	Mirror Steel	1.845	**710**	Brass PVD	4.085
299	Matte Black	2.490	**727**	Brass Br. PVD	4.361
720	Nickel PVD	4.085	**246**	Gold PVD	4.637
706	Black Metal PVD	4.085	**716**	Gold Br. PVD	4.637
707	Black Metal Br. PVD	4.361	**845**	Dark Bronze	4.361
030	Copper PVD	4.085	**187**	Aged Bronze	4.361
708	Copper Br. PVD	4.361	**713**	Antique Brass	4.361
735	Warm Bronze PVD	4.085	**279**	Matte White	2.490

RIR5404

Kit 1/2”NPT f – 1/2”NPT m - 1.75 GPM for Shower System

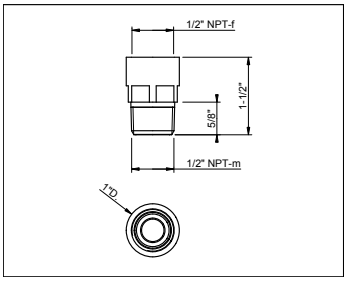



031	Chrome	75

01710

Roller + rod kit for shower head maintenance

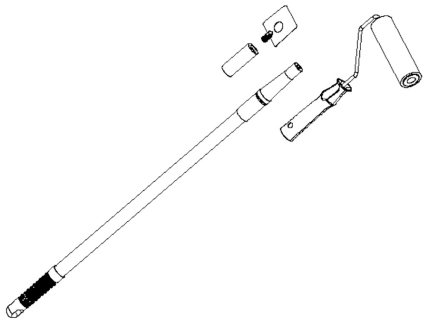

031	Chrome	298


GESSI
COLOUR



57827

Multifunction system for ceiling installation
• 13-3/4”
• RAINFALL/WATERFALL/MIST functions and chromotherapy effect
• 1/2” connections
• Max Flow rate 1.75 GPM with RIR5404 reducer for single exit (to be purchased separately)
• Electronic parts included with remote watertight control and hook
• 12V power supply 01723 required, not included to be purchased separately
• To be complementedby cover 57876

238	Mirror Steel	5.558

57827+57876

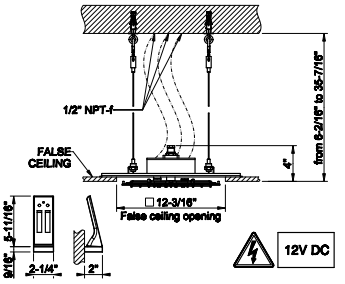

57876

Cover with lighting system for 13-3/4” multifunction system.

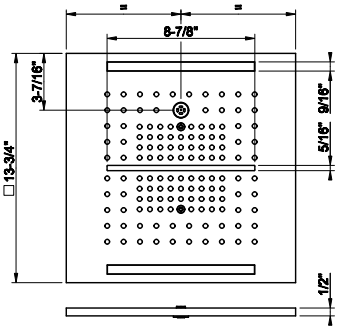

239	Steel Br.	2.849	**726**	Warm Bronze Br. PVD	4.502
238	Mirror Steel	2.849	**710**	Brass PVD	4.218
299	Matte Black	3.847	**727**	Brass Br. PVD	4.502
720	Nickel PVD	4.218	**246**	Gold PVD	4.788
706	Black Metal PVD	4.218	**716**	Gold Br. PVD	4.788
707	Black Metal Br. PVD	4.502	**187**	Dark Bronze	4.502
030	Copper PVD	4.218	**713**	Aged Brozne	4.502
708	Copper Br. PVD	4.502	**279**	Antique Brass	3.847
735	Warm Bronze PVD	4.218			

57831+57882

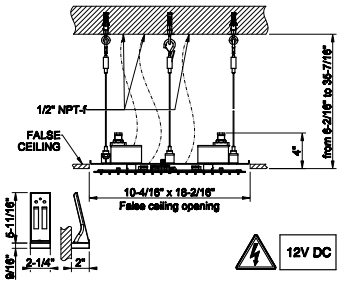

57831

Multifunction system for ceiling installation
• 12” x 19-7/8”
• RAINFALL/WATERFALL/MIST functions and chromotherapy effect
• 1/2” connections
• Max Flow rate 1.75 GPM with RIR5404 reducer for single exit (to be purchased separately)
• Electronic parts includedwith remote watertight control and hook
• 12V power supply 01723 required, not included to be purchased separately
• To becomplemented by cover 57882

238	Mirror Steel	7.009

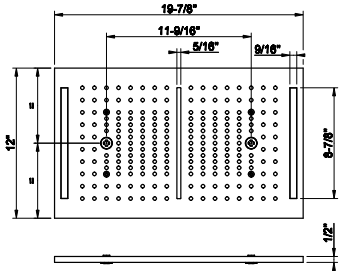

57882

Cover with lighting system for 12” x 19-7/8” multifunction system.

239	Steel Br.	3.034	**726**	Warm Bronze Br. PVD	4.795
238	Mirror Steel	3.034	**710**	Brass PVD	4.492
299	Matte Black	4.098	**727**	Brass Br. PVD	4.795
720	Nickel PVD	4.492	**246**	Gold PVD	5.098
706	Black Metal PVD	4.492	**716**	Gold Br. PVD	5.098
707	Black Metal Br. PVD	4.795	**187**	Dark Bronze	4.795
030	Copper PVD	4.492	**713**	Aged Brozne	4.795
708	Copper Br. PVD	4.795	**279**	Antique Brass	4.098
735	Warm Bronze PVD	4.492			





57927

Multifunction system for ceiling installation
• 19-7/8”
• RAINFALL/WATERFALL/MIST functions and chromotherapy effect
• 1/2” connections
• Max Flow rate 1.75 GPM with RIR5404 reducer for single exit (to be purchased separately)
• Electronic parts included with remote watertight control and hook
• 12V power supply 01723 required, not included to be purchased separately
• To be complementedby cover 57977

238	Mirror Steel	7.424

57927+57977

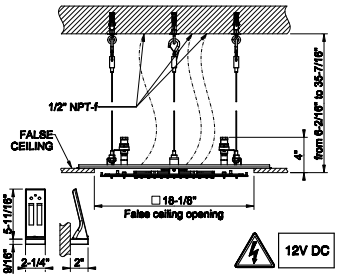

57977

Cover with lighting system for 19-7/8” multifunction system.

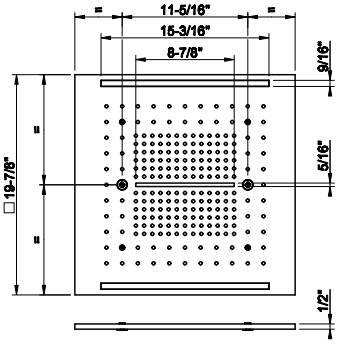

239	Steel Br.	3.539	**726**	Warm Bronze Br. PVD	5.593
238	Mirror Steel	3.539	**710**	Brass PVD	5.239
299	Matte Black	4.778	**727**	Brass Br. PVD	5.593
720	Nickel PVD	5.239	**246**	Gold PVD	5.946
706	Black Metal PVD	5.239	**716**	Gold Br. PVD	5.946
707	Black Metal Br. PVD	5.593	**187**	Dark Bronze	5.593
030	Copper PVD	5.239	**713**	Aged Brozne	5.593
708	Copper Br. PVD	5.593	**279**	Antique Brass	4.778
735	Warm Bronze PVD	5.239			

57829+57878

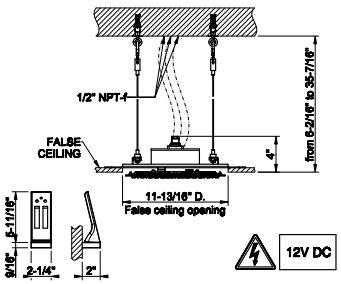

57829

Multifunction system for ceiling installation
• Ø14”
• RAINFALL/WATERFALL/MIST functions and chromotherapy effect
• 1/2” connections
• Max Flow rate 1.75 GPM with RIR5404 reducer for single exit (to be purchased separately)
• Electronic parts included with remotewatertight control and hook
• 12V power supply 01723 required, not included to be purchased separately
• To be complemented bycover 57878

238	Mirror Steel	5.565

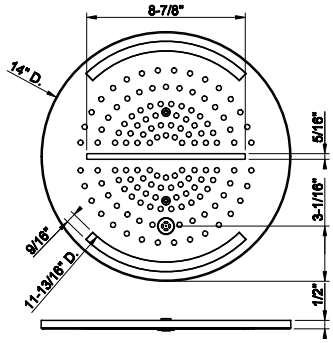

57878

Cover with lighting system for Ø14” multifunction system.

239	Steel Br.	3.334	**726**	Warm Bronze Br. PVD	5.267
238	Mirror Steel	3.334	**710**	Brass PVD	4.935
299	Matte Black	4.502	**727**	Brass Br. PVD	5.267
720	Nickel PVD	4.935	**246**	Gold PVD	5.602
706	Black Metal PVD	4.935	**716**	Gold Br. PVD	5.602
707	Black Metal Br. PVD	5.267	**187**	Dark Bronze	5.267
030	Copper PVD	4.935	**713**	Aged Brozne	5.267
708	Copper Br. PVD	5.267	**279**	Antique Brass	4.502
735	Warm Bronze PVD	4.935			





57929

Multifunction system for ceiling installation
• Ø19-3/4”
• RAINFALL/WATERFALL/MIST functions and chromotherapy effect
• 1/2” connections
• Max Flow rate 1.75 GPM with RIR5404 reducer for single exit (to be purchased separately)
• Electronic parts included withremote watertight control and hook
• 12V power supply 01723 required, not included to be purchased separately
• To becomplementedbycover 57980

57929+57980

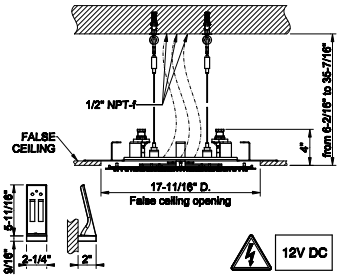

238	Mirror Steel	7.321

57980

Cover with lighting system for Ø19-3/4” multifunction system.

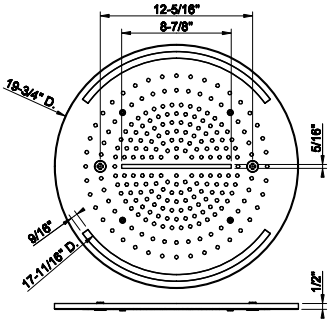

239	Steel Br.	3.993	**726**	Warm Bronze Br. PVD	6.309
238	Mirror Steel	3.993	**710**	Brass PVD	5.910
299	Matte Black	5.392	**727**	Brass Br. PVD	6.309
720	Nickel PVD	5.910	**246**	Gold PVD	6.708
706	Black Metal PVD	5.910	**716**	Gold Br. PVD	6.708
707	Black Metal Br. PVD	6.309	**187**	Dark Bronze	6.309
030	Copper PVD	5.910	**713**	Aged Brozne	6.309
708	Copper Br. PVD	6.309	**279**	Antique Brass	5.392
735	Warm Bronze PVD	5.910			



01723

Power supply CE 30 Watt DIN Rail. Input voltage 100-240VAC. Output voltage 12VDC.

238	Matte White	496

RIR5403

Optional kit PIR motion sensor with IP connector for automatic chromotherapy function activation.



238	Mirror Steel	1.967

01720

Optional kit capacitive keyboard for chromotherapy control with IP connector.



239	Steel Br.	1.214	**726**	Warm Bronze Br. PVD	1.581
238	Mirror Steel	1.214	**710**	Brass PVD	1.581
299	Matte Black	1.518	**727**	Brass Br. PVD	1.581
720	Nickel PVD	1.412	**246**	Gold PVD	1.738
706	Black Metal PVD	1.581	**716**	Gold Br. PVD	1.738
707	Black Metal Br. PVD	1.581	**845**	Dark Bronze	1.651
030	Copper PVD	1.581	**187**	Aged Brozne	1.581
708	Copper Br. PVD	1.581	**713**	Antique Brass	1.581
735	Warm Bronze PVD	1.581	**279**	Matte White	1.518

01722

Optional kit connectors for more control units for ceiling-mounted shower systems



238	Mirror Steel	436

RIR5404

Kit 1/2”NPT f – 1/2”NPT m - 1.75 GPM for Shower System



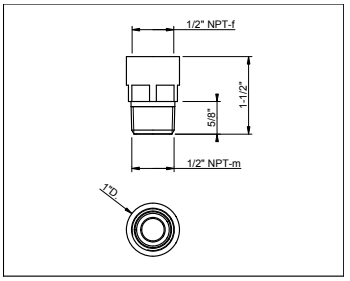

031	Chrome	75

01710

Roller + rod kit for shower head maintenance

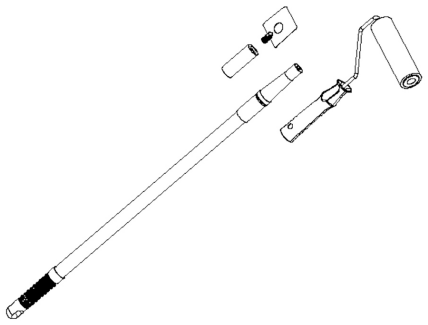

031	Chrome	298

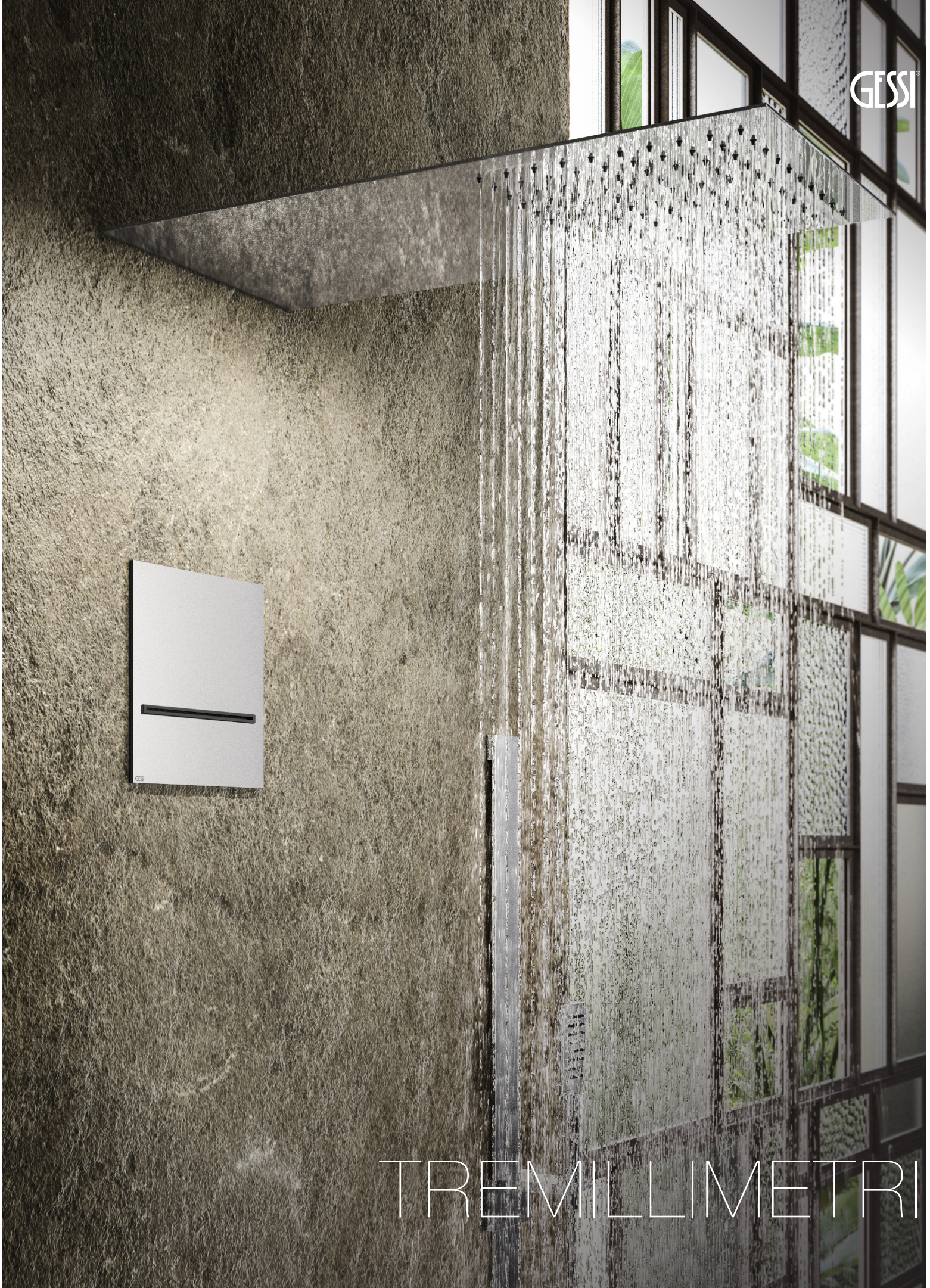

TREMILLIMETRI

TREMILLIMETRI

33052

TREMILLIMETRI wall-mounted shower head
- Round front
- Projection from wall to center 15-3/4”
- Total projection 24-7/16”
- Max flowrate 1.75 GPM



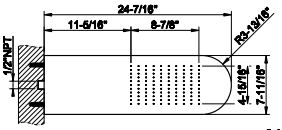

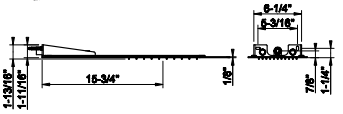

239	Steel Br.	1.874	**726**	Warm Bronze Br. PVD	2.961
238	Mirror Steel	1.874	**710**	Brass PVD	2.773
299	Matte Black	2.529	**727**	Brass Br. PVD	2.961
720	Nickel PVD	2.773	**246**	Gold PVD	3.147
706	Black Metal PVD	2.773	**716**	Gold Br. PVD	3.147
707	Black Metal Br. PVD	2.961	**845**	Dark Bronze	2.961
030	Copper PVD	2.773	**187**	Aged Bronze	2.961
708	Copper Br. PVD	2.961	**713**	Antique Brass	2.961
735	Warm Bronze PVD	2.773	**279**	Matte White	2.529

33062

TREMILLIMETRI wall-mounted shower head
- Square front
- Projection from wall to center 15-3/4”
- Total projection 21-5/8”
- Max flowrate 1.75 GPM



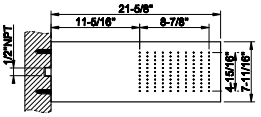

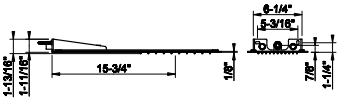

239	Steel Br.	1.609	**726**	Warm Bronze Br. PVD	2.543
238	Mirror Steel	1.609	**710**	Brass PVD	2.382
299	Matte Black	2.174	**727**	Brass Br. PVD	2.543
720	Nickel PVD	2.382	**246**	Gold PVD	2.704
706	Black Metal PVD	2.382	**716**	Gold Br. PVD	2.704
707	Black Metal Br. PVD	2.543	**845**	Dark Bronze	2.543
030	Copper PVD	2.382	**187**	Aged Bronze	2.543
708	Copper Br. PVD	2.543	**713**	Antique Brass	2.543
735	Warm Bronze PVD	2.382	**279**	Matte White	2.174

33057

TREMILLIMETRI wall-mounted multifunction shower head
- Rain and waterfall mode
- Round front
- Projection from wall to center 15-3/4”
- Total projection 24-7/16”
- Max flow rate 1.75 GPM



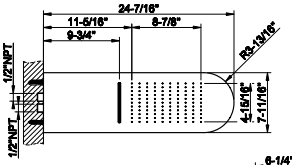

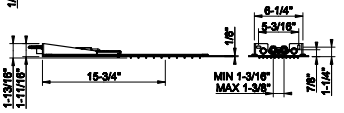

239	Steel Br.	2.931	**726**	Warm Bronze Br. PVD	4.630
238	Mirror Steel	2.931	**710**	Brass PVD	4.337
299	Matte Black	3.955	**727**	Brass Br. PVD	4.630
720	Nickel PVD	4.337	**246**	Gold PVD	4.922
706	Black Metal PVD	4.337	**716**	Gold Br. PVD	4.922
707	Black Metal Br. PVD	4.630	**845**	Dark Bronze	4.630
030	Copper PVD	4.337	**187**	Aged Bronze	4.630
708	Copper Br. PVD	4.630	**713**	Antique Brass	4.630
735	Warm Bronze PVD	4.337	**279**	Matte White	3.955

TREMILLIMETRI

33064

TREMILLLIMETRI wall-mounted multifunction shower head
- Rain and waterfall mode
- Square front
- Projection from wall to center 15-3/4”
- Total projection 21-5/8”
- Max flow rate 1.75 GPM

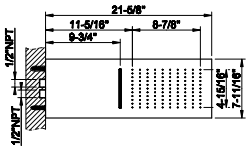

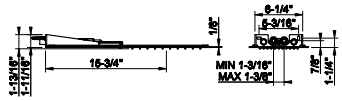



239	Steel Br.	2.931	**726**	Warm Bronze Br. PVD	4.630
238	Mirror Steel	2.931	**710**	Brass PVD	4.337
299	Matte Black	3.955	**727**	Brass Br. PVD	4.630
720	Nickel PVD	4.337	**246**	Gold PVD	4.922
706	Black Metal PVD	4.337	**716**	Gold Br. PVD	4.922
707	Black Metal Br. PVD	4.630	**845**	Dark Bronze	4.630
030	Copper PVD	4.337	**187**	Aged Bronze	4.630
708	Copper Br. PVD	4.630	**713**	Antique Brass	4.630
735	Warm Bronze PVD	4.337	**279**	Matte White	3.955

01710

Roller + rod kit for shower head maintenance

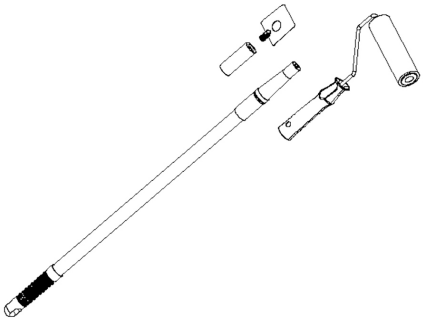

031	Chrome	298



GESSI®

SPOTWATER 316





MULTI-SPRAY
Flessa 57201
Trame 57241
Intreccio 57211
Rigato 57289
Diamantato 57287
Meccanica 57221
Cesello 57231





RAIN
Flessa 57203
Trame 57243
Intreccio 57213
Rigato 57277
Diamantato 57275
Meccanica 57223
Cesello 57233





ATOMIZER
Flessa 57205
Trame 57245
Intreccio 57215
Rigato 57281
Diamantato 57279
Meccanica 57225
Cesello 57235





WATERFALL
Flessa 57207
Trame 57247
Intreccio 57217
Rigato 57285
Diamantato 57283
Meccanica 57227
Cesello 57237





MULTIFUNCTION
Flessa 57249
Trame 57257
Intreccio 57251
Rigato 57271
Diamantato 57273
Meccanica 57253
Cesello 57255

SPOTWATER316

57201

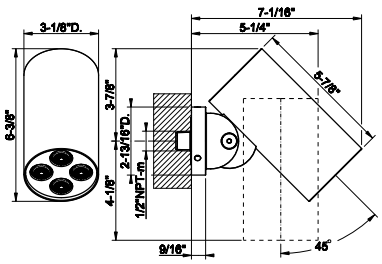

Wall-mounted adjustable showerhead FLESSA.
- Multi-spray function
- 1/2” connections
- Projection from the wall 7-1/16”
- Max flow rate 1.75 GPM



239	Steel Br.	2.006	708	Copper Br. PVD	2.967
299	Matte Black	2.708	726	Warm Bronze Br. PVD	2.967
707	Black Metal Br. PVD	2.967	727	Brass Br. PVD	2.967

57203

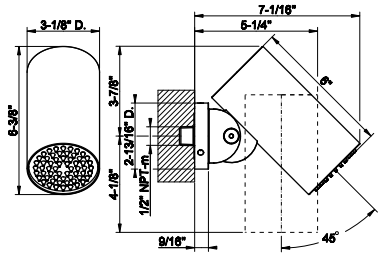

Wall-mounted adjustable showerhead FLESSA.
- Rain function
- 1/2” connections
- Projection from the wall 7-1/16”
- Max flow rate 1.75 GPM



239	Steel Br.	2.006	708	Copper Br. PVD	2.967
299	Matte Black	2.708	726	Warm Bronze Br. PVD	2.967
707	Black Metal Br. PVD	2.967	727	Brass Br. PVD	2.967

57205

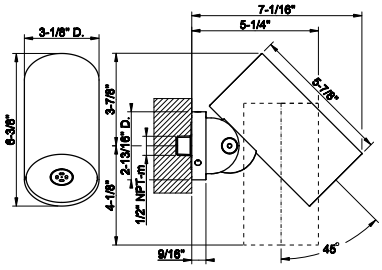

Wall-mounted adjustable showerhead FLESSA.
- Mist function
- 1/2” connections
- Projection from the wall 7-1/16”
- Flow rate 0.14 GPM at 60 PSI



239	Steel Br.	1.919	708	Copper Br. PVD	2.841
299	Matte Black	2.590	726	Warm Bronze Br. PVD	2.841
707	Black Metal Br. PVD	2.841	727	Brass Br. PVD	2.841

57207

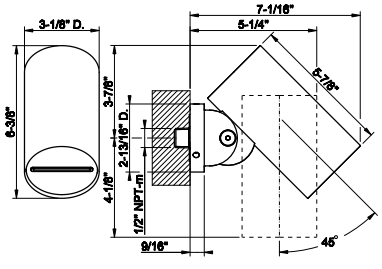

Wall-mounted adjustable showerhead FLESSA.
- Waterfall function
- 1/2” connections
- Projection from the wall 7-1/16”
- Max flow rate 1.75 GPM



239	Steel Br.	2.231	708	Copper Br. PVD	3.302
299	Matte Black	3.013	726	Warm Bronze Br. PVD	3.302
707	Black Metal Br. PVD	3.302	727	Brass Br. PVD	3.302

57249



Wall-mounted adjustable shower head FLESSA. RAINFALL/ SPRAY/MASSAGE function.
- 1/2” connections
- Projection from the wall 6-9/16”
- Max flow rate 1.75 GPM

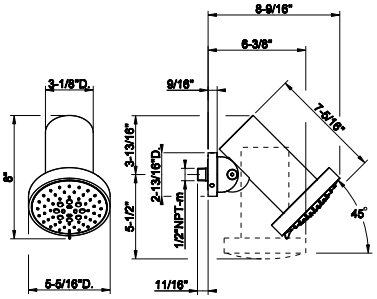

239	Steel Br.	2.405	708	Copper Br. PVD	3.560
299	Matte Black	3.247	726	Warm Bronze Br. PVD	3.560
707	Black Metal Br. PVD	3.560	727	Brass Br. PVD	3.560

57241



Wall-mounted adjustable showerhead TRAME.
- Multi-spray function
- 1/2” connections
- Projection from the wall 7-1/16”
- Max flow rate 1.75 GPM

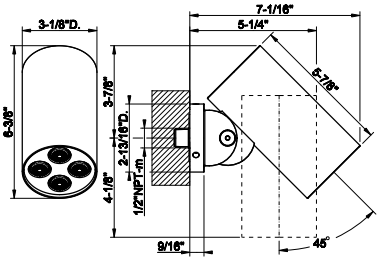

239	Steel Br.	2.499	726	Warm Bronze Br. PVD	3.699
707	Black Metal Br. PVD	3.699	727	Brass Br. PVD	3.699
708	Copper Br. PVD	3.699			

57243



Wall-mounted adjustable showerhead TRAME
- Rain function
- 1/2” connections
- Projection from the wall 7-1/16”
- Max flow rate 1.75GPM

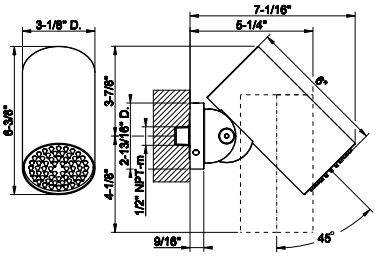

239	Steel Br.	2.499	726	Warm Bronze Br. PVD	3.699
707	Black Metal Br. PVD	3.699	727	Brass Br. PVD	3.699
708	Copper Br. PVD	3.699			

57245



Wall-mounted adjustable showerhead TRAME.
- Mist function
- 1/2” connections
- Projection from the wall 7-1/16”
- Flow rate 0.14 GPM at 60 PSI

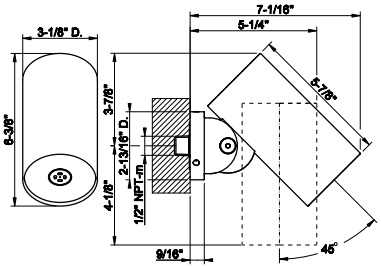

239	Steel Br.	2.463	726	Warm Bronze Br. PVD	3.644
707	Black Metal Br. PVD	3.644	727	Brass Br. PVD	3.644
708	Copper Br. PVD	3.644			

SPOTWATER316

57247

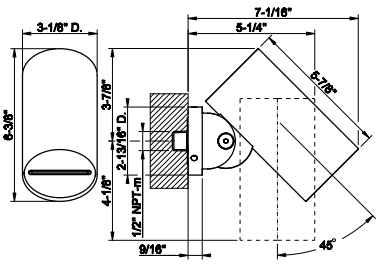

Wall-mounted adjustable showerhead TRAME.
- Waterfall function
- 1/2” connections
- Projection from the wall 7-1/16”
- Max flow rate 1.75 GPM



239	Steel Br.	2.727	726	Warm Bronze Br. PVD	4.036
707	Black Metal Br. PVD	4.036	727	Brass Br. PVD	4.036
708	Copper Br. PVD	4.036			

57257

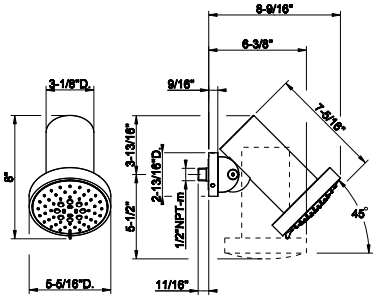

Wall-mounted adjustable showerhead TRAME.
- Rain, Spray, Massage function
- 1/2” connections
- Projection from the wall 7-1/16”
- Max flow rate 1.75 GPM



239	Steel Br.	2.910	726	Warm Bronze Br. PVD	4.306
707	Black Metal Br. PVD	4.306	727	Brass Br. PVD	4.306
708	Copper Br. PVD	4.306			

57211

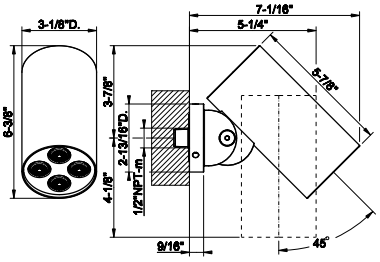

Wall-mounted adjustable showerhead INTRECCIO.
- Multi-spray function
- 1/2” connections
- Projection from the wall 7-1/16”
- Max flow rate 1.75 GPM



239	Steel Br.	2.499	708	Copper Br. PVD	3.699
299	Matte Black	3.375	726	Warm Bronze Br. PVD	3.699
707	Black Metal Br. PVD	3.699	727	Brass Br. PVD	3.699

57213

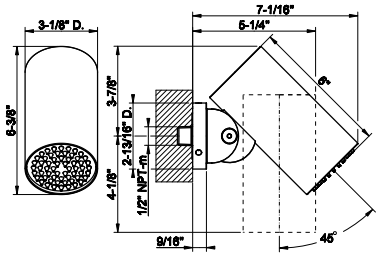

Wall-mounted adjustable showerhead INTRECCIO.
- Rain function
- 1/2” connections
- Projection from the wall 7-1/16”
- Max flow rate1.75 GPM



239	Steel Br.	2.499	708	Copper Br. PVD	3.699
299	Matte Black	3.375	726	Warm Bronze Br. PVD	3.699
707	Black Metal Br. PVD	3.699	727	Brass Br. PVD	3.699

57215



Wall-mounted adjustable showerhead INTRECCIO.
- Mist function
- 1/2” connections
- Projection from the wall 7-1/16”
- Flow rate 0.14 GPM at 60 PSI

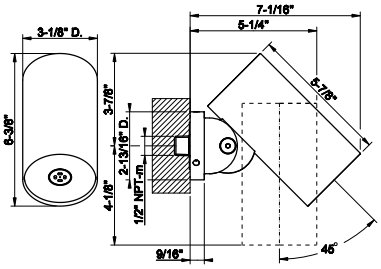

239	Steel Br.	2.463	708	Copper Br. PVD	3.644
299	Matte Black	3.327	726	Warm Bronze Br. PVD	3.644
707	Black Metal Br. PVD	3.644	727	Brass Br. PVD	3.644

57217



Wall-mounted adjustable showerhead INTRECCIO.
- Waterfall function
- 1/2” connections
- Projection from the wall 7-1/16”
- Max flowrate 1.75 GPM

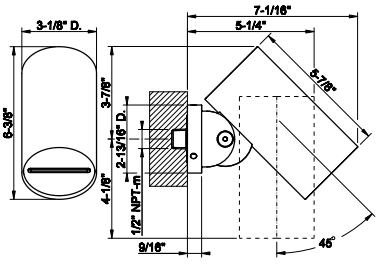

239	Steel Br.	2.727	708	Copper Br. PVD	4.036
299	Matte Black	3.683	726	Warm Bronze Br. PVD	4.036
707	Black Metal Br. PVD	4.036	727	Brass Br. PVD	4.036

57251



Wall-mounted adjustable showerhead INTRECCIO.
- Rain, Spray, Massage function
- 1/2” connections
- Projection from the wall 7-1/16”
- Max flow rate 1.75 GPM

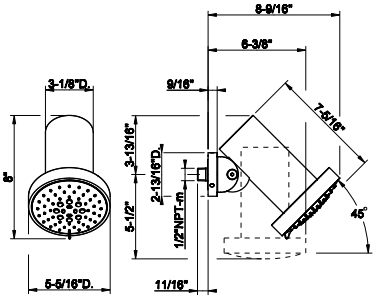

239	Steel Br.	2.910	708	Copper Br. PVD	4.306
299	Matte Black	3.929	726	Warm Bronze Br. PVD	4.306
707	Black Metal Br. PVD	4.306	727	Brass Br. PVD	4.306

57289



Wall-mounted adjustable showerhead RIGATO.
- Multi-spray function
- 1/2” connections
- Projection from the wall 7-1/16”
- Max flow rate 1.75 GPM

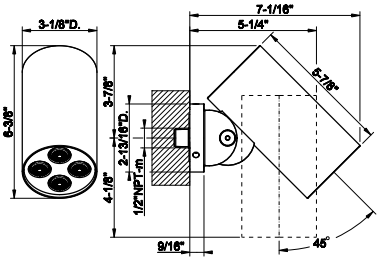

239	Steel Br.	2.550	708	Copper Br. PVD	3.774
299	Matte Black	3.441	726	Warm Bronze Br. PVD	3.774
707	Black Metal Br. PVD	3.774	727	Brass Br. PVD	3.774

57277

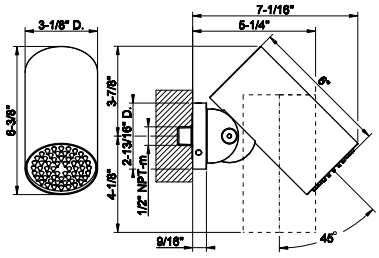

Wall-mounted adjustable showerhead RIGATO.
- Rain function
- 1/2" connections
- Projection from the wall 7-1/16"
- Max flow rate 1.75 GPM



239	Steel Br.	2.550	708	Copper Br. PVD	3.774
299	Matte Black	3.441	726	Warm Bronze Br. PVD	3.774
707	Black Metal Br. PVD	3.774	727	Brass Br. PVD	3.774

57281

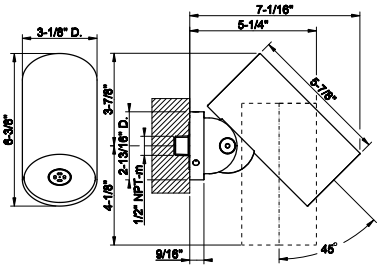

Wall-mounted adjustable showerhead RIGATO.
- Mist function
- 1/2" connections
- Projection from the wall 7-1/16"
- Flow rate 0.14 GPM at 60 PSI



239	Steel Br.	2.463	708	Copper Br. PVD	3.644
299	Matte Black	3.324	726	Warm Bronze Br. PVD	3.644
707	Black Metal Br. PVD	3.644	727	Brass Br. PVD	3.644

57285

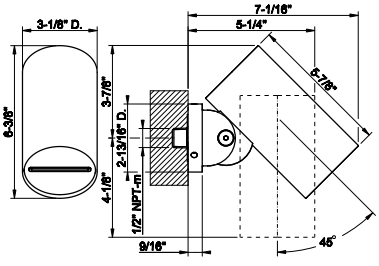

Wall-mounted adjustable showerhead RIGATO.
- Waterfall function
- 1/2" connections
- Projection from the wall 7-1/16"
- Max flow rate 1.75 GPM



239	Steel Br.	2.780	708	Copper Br. PVD	4.114
299	Matte Black	3.754	726	Warm Bronze Br. PVD	4.114
707	Black Metal Br. PVD	4.114	727	Brass Br. PVD	4.114

57271

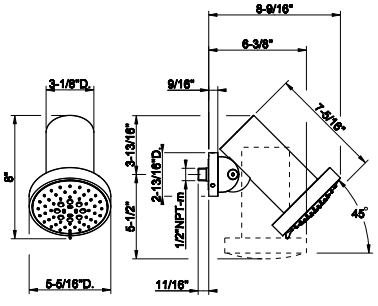

Wall-mounted adjustable shower head RIGATO.
•RAINFALL/SPRAY/MASSAGE function.
- 1/2" connections
- Projection from the wall 7-1/16"
- Flow rate 0.14 GPM at 60 PSI



239	Steel Br.	2.910	708	Copper Br. PVD	4.306
299	Matte Black	3.929	726	Warm Bronze Br. PVD	4.306
707	Black Metal Br. PVD	4.306	727	Brass Br. PVD	4.306

57287



Wall-mounted adjustable showerhead DIAMANTATO.
- Multi-spray function
- 1/2” connections
- Projection from the wall 7-1/16”
- Max flow rate 1.75 GPM

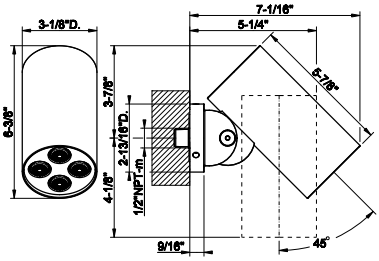

239	Steel Br.	2.550	708	Copper Br. PVD	3.774
299	Matte Black	3.441	726	Warm Bronze Br. PVD	3.774
707	Black Metal Br. PVD	3.774	727	Brass Br. PVD	3.774

57275



Wall-mounted adjustable showerhead DIAMANTATO.
- Rain function
- 1/2” connections
- Projection from the wall 7-1/16”
- Max flow rate1.75 GPM

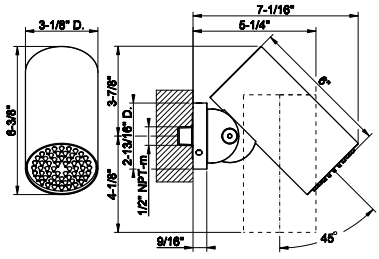

239	Steel Br.	2.550	708	Copper Br. PVD	3.774
299	Matte Black	3.441	726	Warm Bronze Br. PVD	3.774
707	Black Metal Br. PVD	3.774	727	Brass Br. PVD	3.774

57279



Wall-mounted adjustable showerhead DIAMANTATO.
- Mist function
- 1/2” connections
- Projection from the wall 7-1/16”
- Flow rate 0.14 GPM at 60 PSI

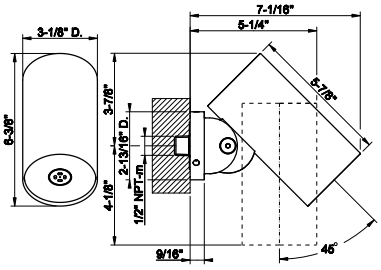

239	Steel Br.	2.463	708	Copper Br. PVD	3.644
299	Matte Black	3.324	726	Warm Bronze Br. PVD	3.644
707	Black Metal Br. PVD	3.644	727	Brass Br. PVD	3.644

57283



Wall-mounted adjustable showerhead DIAMANTATO.
- Waterfall function
- 1/2” connections
- Projection from the wall 7-1/16”
- Max flow rate 1.75 GPM

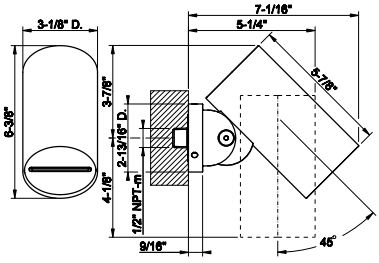

239	Steel Br.	2.780	708	Copper Br. PVD	4.114
299	Matte Black	3.754	726	Warm Bronze Br. PVD	4.114
707	Black Metal Br. PVD	4.114	727	Brass Br. PVD	4.114

57273

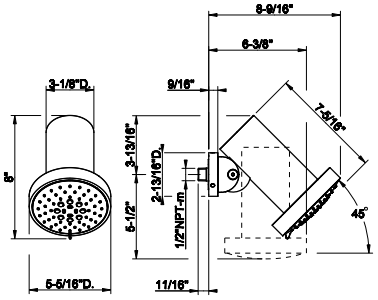

Wall-mounted adjustable shower head DIAMANTATO.
•RAINFALL/SPRAY/MASSAGE function.
• 1/2” connections
• Projection from the wall7-1/16”
• Flow rate 0.14 GPM at 60 PSI



239	Steel Br.	2.910	708	Copper Br. PVD	4.306
299	Matte Black	3.929	726	Warm Bronze Br. PVD	4.306
707	Black Metal Br. PVD	4.306	727	Brass Br. PVD	4.306

57221

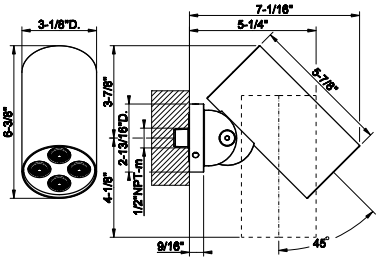

Wall-mounted adjustable showerhead MECCANICA.
• Multi-spray function
• 1/2” connections
• Projection from the wall 7-1/16”
• Max flow rate 1.75 GPM



239	Steel Br.	2.499	708	Copper Br. PVD	3.699
299	Matte Black	3.375	726	Warm Bronze Br. PVD	3.699
707	Black Metal Br. PVD	3.699	727	Brass Br. PVD	3.699

57223

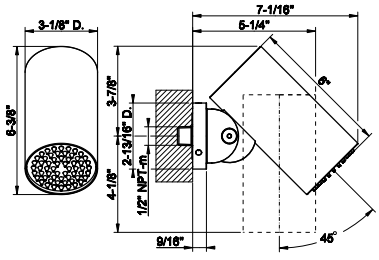

Wall-mounted adjustable showerhead MECCANICA.
• Rain function
• 1/2” connections
• Projection from the wall 7-1/16”
• Max flow rate1.75 GPM



239	Steel Br.	2.499	708	Copper Br. PVD	3.699
299	Matte Black	3.375	726	Warm Bronze Br. PVD	3.699
707	Black Metal Br. PVD	3.699	727	Brass Br. PVD	3.699

57225

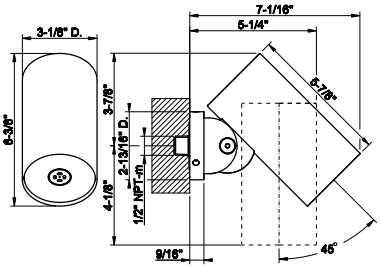

Wall-mounted adjustable showerhead MECCANICA.
• Mist function
• 1/2” connections
• Projection from the wall 7-1/16”
• Flow rate 0.14 GPM at 60 PSI



239	Steel Br.	2.463	708	Copper Br. PVD	3.644
299	Matte Black	3.327	726	Warm Bronze Br. PVD	3.644
707	Black Metal Br. PVD	3.644	727	Brass Br. PVD	3.644

57227



Wall-mounted adjustable showerhead MECCANICA.
- Waterfall function
- 1/2” connections
- Projection from the wall 7-1/16”
- Max flowrate 1.75 GPM

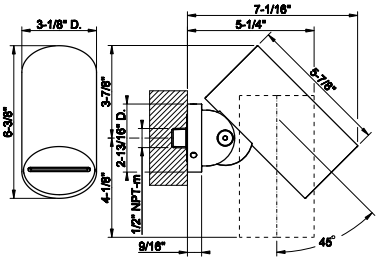

239	Steel Br.	2.727	708	Copper Br. PVD	4.036
299	Matte Black	3.683	726	Warm Bronze Br. PVD	4.036
707	Black Metal Br. PVD	4.036	727	Brass Br. PVD	4.036

57253



Wall-mounted adjustable showerhead MECCANICA.
- Rain, Spray, Massage function
- 1/2” connections
- Projection from the wall 7-1/16”
- Max flow rate 1.75 GPM

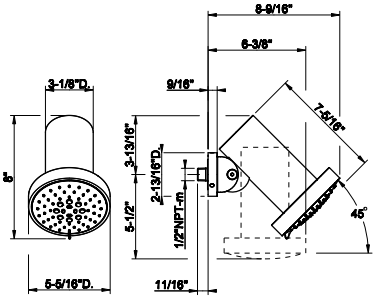

239	Steel Br.	2.910	708	Copper Br. PVD	4.306
299	Matte Black	3.929	726	Warm Bronze Br. PVD	4.306
707	Black Metal Br. PVD	4.306	727	Brass Br. PVD	4.306

57231



Wall-mounted adjustable showerhead CESELLO.
- Multi-spray function
- 1/2” connections
- Projection from the wall 7-1/16”
- Max flowrate 1.75 GPM

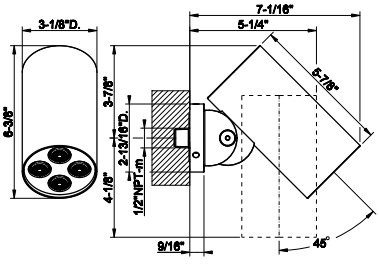

239	Steel Br.	2.499	708	Copper Br. PVD	3.699
299	Matte Black	3.375	726	Warm Bronze Br. PVD	3.699
707	Black Metal Br. PVD	3.699	727	Brass Br. PVD	3.699

57233



Wall-mounted adjustable showerhead CESELLO.
- Rain function
- 1/2” connections
- Projection from the wall 7-1/16”
- Max flow rate 1.75 GPM

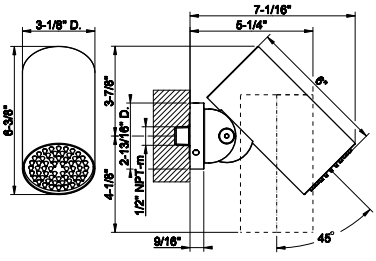

239	Steel Br.	2.499	708	Copper Br. PVD	3.699
299	Matte Black	3.375	726	Warm Bronze Br. PVD	3.699
707	Black Metal Br. PVD	3.699	727	Brass Br. PVD	3.699

57235

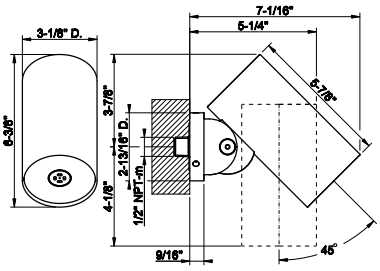

Wall-mounted adjustable showerhead CESELLO.
- Mist function
- 1/2” connections
- Projection from the wall 7-1/16”
- Flow rate 0.14GPM at 60 PSI



239	Steel Br.	2.463	708	Copper Br. PVD	3.644
299	Matte Black	3.327	726	Warm Bronze Br. PVD	3.644
707	Black Metal Br. PVD	3.644	727	Brass Br. PVD	3.644

57237

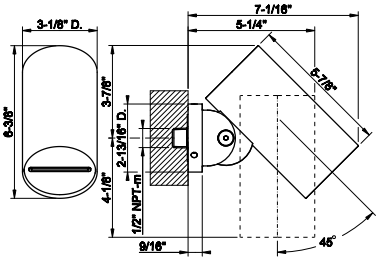

Wall-mounted adjustable showerhead CESELLO.
- Waterfall function
- 1/2” connections
- Projection from the wall 7-1/16”
- Max flow rate 1.75 GPM



239	Steel Br.	2.727	708	Copper Br. PVD	4.036
299	Matte Black	3.683	726	Warm Bronze Br. PVD	4.036
707	Black Metal Br. PVD	4.036	727	Brass Br. PVD	4.036

57255

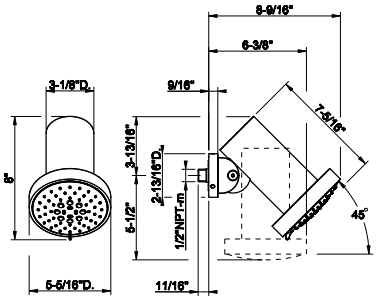

Wall-mounted adjustable showerhead CESELLO.
- Rain, Spray, Massage function
- 1/2” connections
- Projection from the wall 7-1/16”
- Max flow rate 1.75 GPM



239	Steel Br.	2.910	708	Copper Br. PVD	4.306
299	Matte Black	3.929	726	Warm Bronze Br. PVD	4.306
707	Black Metal Br. PVD	4.306	727	Brass Br. PVD	4.306

GESSI®



SPOTWATER

57261



Wall-mounted adjustable showerhead .
- Multi-spray function
- 1/2” connections
- Projection from the wall 7-1/16”
- Max flow rate 1.75 GPM

031	Chrome	1.861	726	Warm Bronze Br. PVD	2.941
149	Finox Br. Nickel	2.513	710	Brass PVD	2.755
299	Matte Black	2.513	727	Brass Br. PVD	2.941
720	Nickel PVD	2.755	246	Gold PVD	3.126
706	Black Metal PVD	2.755	716	Gold Br. PVD	3.126
707	Black Metal Br. PVD	2.941	845	Dark Bronze	2.941
030	Copper PVD	2.755	187	Aged Bronze	2.941
708	Copper Br. PVD	2.941	713	Antique Brass	2.941
735	Warm Bronze PVD	2.755	279	Matte White	2.513

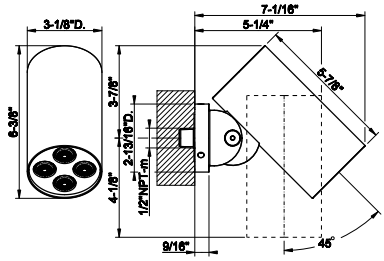

57263



Wall-mounted adjustable showerhead.
- Rain function
- 1/2” connections
- Projection from the wall 7-1/16”
- Max flow rate 1.75 GPM

031	Chrome	1.861	726	Warm Bronze Br. PVD	2.941
149	Finox Br. Nickel	2.513	710	Brass PVD	2.755
299	Matte Black	2.513	727	Brass Br. PVD	2.941
720	Nickel PVD	2.755	246	Gold PVD	3.126
706	Black Metal PVD	2.755	716	Gold Br. PVD	3.126
707	Black Metal Br. PVD	2.941	845	Dark Bronze	2.941
030	Copper PVD	2.755	187	Aged Bronze	2.941
708	Copper Br. PVD	2.941	713	Antique Brass	2.941
735	Warm Bronze PVD	2.755	279	Matte White	2.513

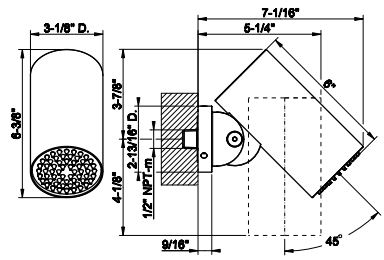

57265



Wall-mounted adjustable showerhead.
- Mist function
- 1/2” connections
- Projection from the wall 7-1/16”
- Flow rate 0.14 GPM at 60 PSI

031	Chrome	1.778	726	Warm Bronze Br. PVD	2.809
149	Finox Br. Nickel	2.401	710	Brass PVD	2.632
299	Matte Black	2.401	727	Brass Br. PVD	2.809
720	Nickel PVD	2.632	246	Gold PVD	2.987
706	Black Metal PVD	2.632	716	Gold Br. PVD	2.987
707	Black Metal Br. PVD	2.809	845	Dark Bronze	2.809
030	Copper PVD	2.632	187	Aged Bronze	2.809
708	Copper Br. PVD	2.809	713	Antique Brass	2.809
735	Warm Bronze PVD	2.632	279	Matte White	2.401

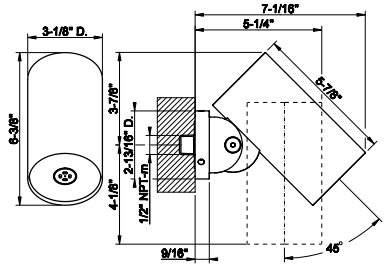

57267



Wall-mounted adjustable showerhead.
- Waterfall function
- 1/2” connections
- Projection from the wall 7-1/16”
- Max flow rate 1.75GPM

031	Chrome	2.089	726	Warm Bronze Br. PVD	3.301
149	Finox Br. Nickel	2.820	710	Brass PVD	3.093
299	Matte Black	2.820	727	Brass Br. PVD	3.301
720	Nickel PVD	3.093	246	Gold PVD	3.510
706	Black Metal PVD	3.093	716	Gold Br. PVD	3.510
707	Black Metal Br. PVD	3.301	845	Dark Bronze	3.301
030	Copper PVD	3.093	187	Aged Bronze	3.301
708	Copper Br. PVD	3.301	713	Antique Brass	3.301
735	Warm Bronze PVD	3.093	279	Matte White	2.820

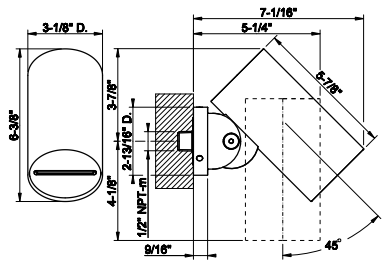

SPOTWATER

57269

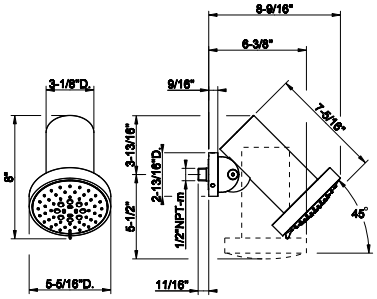

Wall-mounted adjustable shower head.
•RAINFALL/SPRAY/MASSAGE function.
• 1/2" connections
• Projection from the wall 7-1/16"
• Flow rate 0.14 GPM at 60 PSI



031	Chrome	2.785	726	Warm Bronze Br. PVD	4.402
149	Finox Br. Nickel	3.759	710	Brass PVD	4.122
299	Matte Black	3.759	727	Brass Br. PVD	4.402
720	Nickel PVD	4.122	246	Gold PVD	4.676
706	Black Metal PVD	4.122	716	Gold Br. PVD	4.676
707	Black Metal Br. PVD	4.402	845	Dark Bronze	4.402
030	Copper PVD	4.122	187	Aged Bronze	4.402
708	Copper Br. PVD	4.402	713	Antique Brass	4.402
735	Warm Bronze PVD	4.122	279	Matte White	3.759

GESSI



CASCATA



20295

Wall-fixing cascade spout with separate control (not included).
- 1/2” connections
- Flow rate 4.8 GPM at 60 PSI

239	Steel Br.	1.949	726	Warm Bronze Br. PVD	3.077
238	Mirror Steel	1.949	710	Brass PVD	2.884
299	Matte Black	2.631	727	Brass Br. PVD	3.077
720	Nickel PVD	2.884	246	Gold PVD	3.273
706	Black Metal PVD	2.884	716	Gold Br. PVD	3.273
707	Black Metal Br. PVD	3.077	187	Aged Bronze	3.077
030	Copper PVD	2.884	713	Antique Brass	3.077
708	Copper Br. PVD	3.077	845	Dark Bronze	3.077
735	Warm Bronze PVD	2.884	279	Matte White	2.631

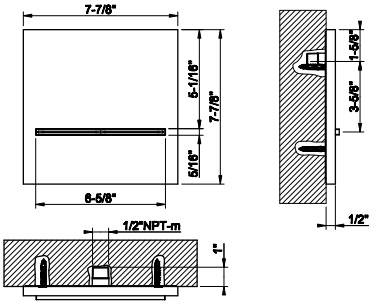

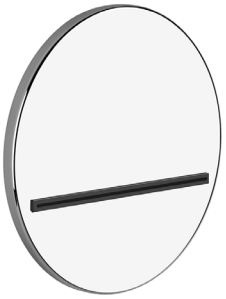

65295

Wall-fixing cascade spout
- 1/2” connections
- Flow rate 4.8 GPM at 60 PSI

031	Chrome	1.937	726	Warm Bronze Br. PVD	3.058
149	Finox Br. Nickel	2.614	710	Brass PVD	2.864
299	Matte Black	2.614	727	Brass Br. PVD	3.058
720	Nickel PVD	2.864	246	Gold PVD	3.255
706	Black Metal PVD	2.864	716	Gold Br. PVD	3.255
707	Black Metal Br. PVD	3.058	187	Aged Bronze	3.058
030	Copper PVD	2.864	713	Antique Brass	3.058
708	Copper Br. PVD	3.058	845	Dark Bronze	3.058
735	Warm Bronze PVD	2.864	279	Matte White	2.614

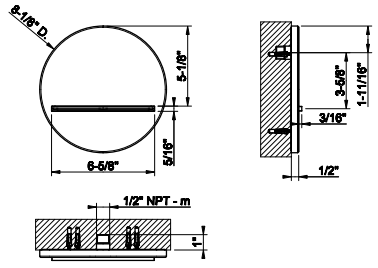

20293

Wall-fixing cascade spout with separate control (not included)
- 1/2” connections
- Projection from the wall 6”
- Flow rate 4.2 GPM at 60 PSI



239	Steel Br.	2.966	726	Warm Bronze Br. PVD	4.687
238	Mirror Steel	2.966	710	Brass PVD	4.390
299	Matte Black	4.006	727	Brass Br. PVD	4.687
720	Nickel PVD	4.390	246	Gold PVD	4.985
706	Black Metal PVD	4.390	716	Gold Br. PVD	4.985
707	Black Metal Br. PVD	4.687	187	Aged Bronze	4.687
030	Copper PVD	4.390	713	Antique Brass	4.687
708	Copper Br. PVD	4.687	845	Dark Bronze	4.687
735	Warm Bronze PVD	4.390	279	Matte White	4.006

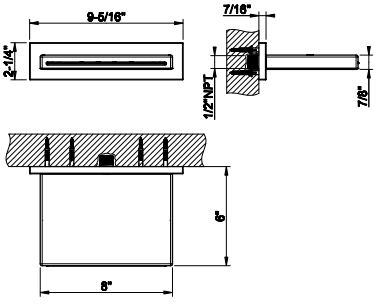

26691

Deck-mounted bath spout
- 1/2” connections
- Spout projection 6-5/16”
- Spout flow rate 10 GPM at 60 PSI



031	Chrome	3.232	735	Warm Bronze PVD	4.783
149	Finox Br. Nickel	4.364	726	Warm Bronze Br. PVD	5.106
299	Matte Black	4.364	710	Brass PVD	4.783
720	Nickel PVD	4.783	727	Brass Br. PVD	5.106
706	Black Metal PVD	4.783	187	Aged Bronze	5.106
707	Black Metal Br. PVD	5.106	713	Antique Brass	5.106
030	Copper PVD	4.783	845	Dark Bronze	5.106
708	Copper Br. PVD	5.106			

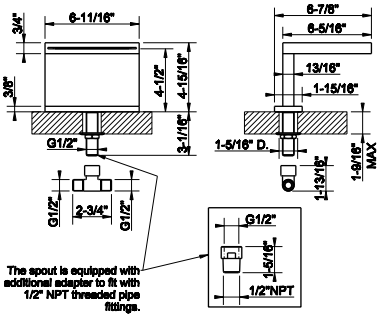

GESSI

BODY JETS

32975

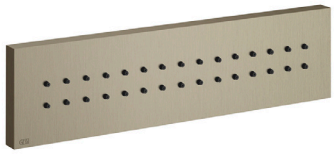

Rectangular body spray
- 1/2” connections
- Max flow rate 1 GPM at 60 PSI

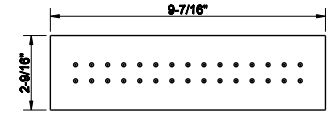

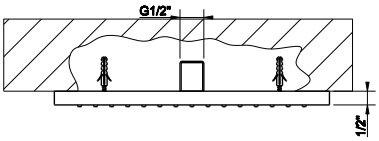

031	Chrome	1.316	708	Copper Br. PVD	2.079
149	Finox Br. Nickel	1.777	735	Warm Bronze PVD	1.947
299	Matte Black	1.777	726	Warm Bronze Br. PVD	2.079
720	Nickel PVD	1.947	710	Brass PVD	1.947
706	Black Metal PVD	1.947	727	Brass Br. PVD	2.079
707	Black Metal Br. PVD	2.079	713	Antique Brass	2.079
030	Copper PVD	1.947	279	Matte White	1.777

32973



Square body spray
- 1/2” connections
- Max flow rate 1 GPM at 60 PSI

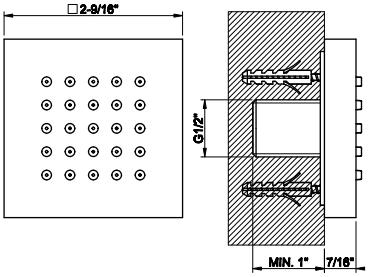

031	Chrome	552	708	Copper Br. PVD	873
149	Finox Br. Nickel	746	735	Warm Bronze PVD	818
299	Matte Black	746	726	Warm Bronze Br. PVD	873
720	Nickel PVD	818	710	Brass PVD	818
706	Black Metal PVD	818	727	Brass Br. PVD	873
707	Black Metal Br. PVD	873	713	Antique Brass	873
030	Copper PVD	818	279	Matte White	746

32987



In-wall rough valve for pivotable body spray 32984

32987+32984

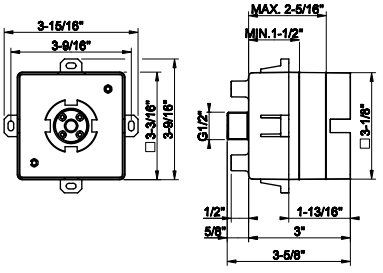

031	Chrome	406

32984

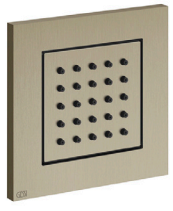

TRIM PARTS ONLY Square in-wall pivotable body spray
- 1/2” connections
- Requires in-wall rough valve 32987
- Max flow rate 1 GPM at 60 PSI

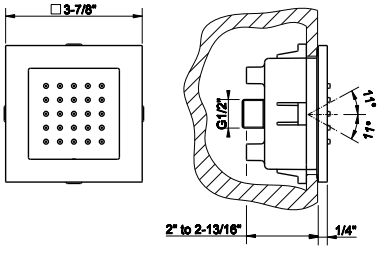

031	Chrome	957	708	Copper Br. PVD	1.513
149	Finox Br. Nickel	1.293	735	Warm Bronze PVD	1.417
299	Matte Black	1.293	726	Warm Bronze Br. PVD	1.513
720	Nickel PVD	1.417	710	Brass PVD	1.417
706	Black Metal PVD	1.417	727	Brass Br. PVD	1.513
707	Black Metal Br. PVD	1.513	713	Antique Brass	1.513
030	Copper PVD	1.417	279	Matte White	1.293

BODY JETS

32971

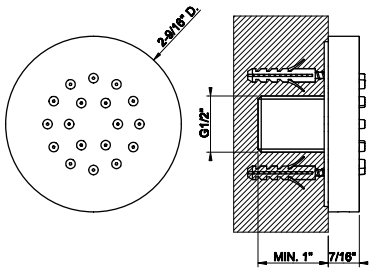

Round body spray
- 1/2" connections
- Max flow rate 1 GPM at 60 PSI



031	Chrome	552	726	Warm Bronze Br. PVD	873
149	Finox Br. Nickel	746	710	Brass PVD	840
299	Matte Black	746	727	Brass Br. PVD	873
147	Chrome Br.	766	246	Gold PVD	929
720	Nickel PVD	818	716	Gold Br. PVD	929
706	Black Metal PVD	818	187	Aged Bronze	873
707	Black Metal Br. PVD	873	713	Antique Brass	873
030	Copper PVD	818	845	Dark Bronze	873
708	Copper Br. PVD	873	279	Matte White	746
735	Warm Bronze PVD	840			

32985+32982

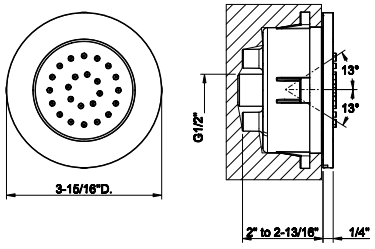

32985

In-wall rough valve for pivotable body spray 32982



031	Chrome	406

32982

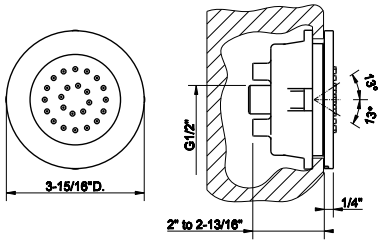

TRIM PARTS ONLY Round in-wall pivotable body spray
- 1/2" connections
- Requires in-wall rough valve 32985
- Max flow rate 1 GPM at60 PSI



031	Chrome	773	726	Warm Bronze Br. PVD	1.223
149	Finox Br. Nickel	1.045	710	Brass PVD	1.145
299	Matte Black	1.045	727	Brass Br. PVD	1.223
147	Chrome Br.	1.045	246	Gold PVD	1.300
720	Nickel PVD	1.145	716	Gold Br. PVD	1.300
706	Black Metal PVD	1.145	187	Aged Bronze	1.223
707	Black Metal Br. PVD	1.223	713	Antique Brass	1.223
030	Copper PVD	1.145	845	Dark Bronze	1.223
708	Copper Br. PVD	1.223	279	Matte White	1.045
735	Warm Bronze PVD	1.145			

26672

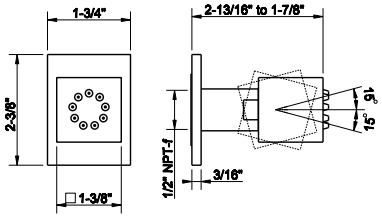

Pivotable body spray
- 1/2" connection
- Max flow rate .65 GPM at 60 PSI

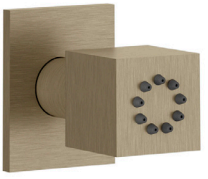

031	Chrome	435	708	Copper Br. PVD	688
149	Finox Br. Nickel	589	735	Warm Bronze PVD	644
299	Matte Black	589	726	Warm Bronze Br. PVD	688
720	Nickel PVD	644	710	Brass PVD	644
706	Black Metal PVD	644	727	Brass Br. PVD	688
707	Black Metal Br. PVD	688	713	Antique Brass	688
030	Copper PVD	644			

13375

Pivotable body spray
- 1/2” connections
- Max flow rate 0.9 GPM at 60 PSI



031	Chrome	405	726	Warm Bronze Br. PVD	639
149	Finox Br. Nickel	547	710	Brass PVD	598
299	Matte Black	547	727	Brass Br. PVD	639
147	Chrome Br.	547	246	Gold PVD	680
720	Nickel PVD	598	716	Gold Br. PVD	680
706	Black Metal PVD	598	187	Aged Bronze	639
707	Black Metal Br. PVD	639	713	Antique Brass	639
030	Copper PVD	598	845	Dark Bronze	639
708	Copper Br. PVD	639	279	Matte White	547
735	Warm Bronze PVD	598			

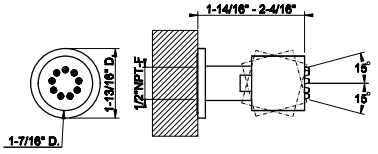



GESSI

HANDSHOWER SETS

HANDSHOWER SETS



66123

Handshower set
- Fixed hook.
- Wall elbow
- 59” flex hose
- Max flow rate 1.75 GPM. Can be combined with the insert 66600 and 66602of the desired finish.

031	Chrome	895	707	Black Metal Br. PVD	1.415
149	Finox Br. Nickel	1.210	708	Copper Br. PVD	1.415
299	Matte Black	1.210	726	Warm Bronze Br. PVD	1.415
720	Nickel PVD	1.325	727	Brass Br. PVD	1.415
706	Black Metal PVD	1.325	845	Dark Bronze	1.415

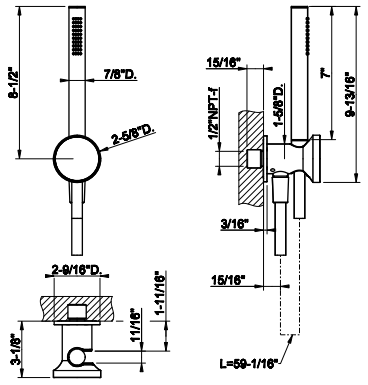



65123

Handshower set
- Fixed hook.
- Wall elbow
- 59” flex hose
- Max flow rate 1.75 GPM

031	Chrome	1.346	735	Warm Bronze PVD	1.991
149	Finox Br. Nickel	1.816	726	Warm Bronze Br. PVD	2.127
299	Matte Black	1.816	710	Brass PVD	1.991
720	Nickel PVD	1.991	727	Brass Br. PVD	2.127
706	Black Metal PVD	1.991	246	Gold PVD	2.262
707	Black Metal Br. PVD	2.127	716	Gold Br. PVD	2.262
030	Copper PVD	1.991	187	Aged Bronze	2.127
708	Copper Br. PVD	2.127	713	Antique Brass	2.127

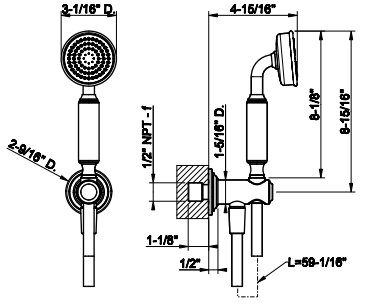



63329

Handshower set
- Fixed hook
- Wall elbow
- 59” flex hose
- Max flow rate 1.75 GPM

031	Chrome	847	735	Warm Bronze PVD	1.254
149	Finox Br. Nickel	1.141	726	Warm Bronze Br. PVD	1.337
299	Matte Black	1.141	710	Brass PVD	1.254
720	Nickel PVD	1.254	727	Brass Br. PVD	1.337
706	Black Metal PVD	1.254	187	Aged Bronze	1.337
707	Black Metal Br. PVD	1.337	713	Antique Brass	1.337
030	Copper PVD	1.254	845	Dark Bronze	1.337
708	Copper Br. PVD	1.337			

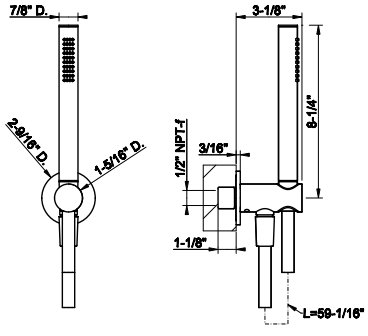



58123

Handshower set
- Fixed hook.
- Wall elbow
- 59” flex hose
- Max flow rate 1.75 GPM

031	Chrome	1.004	726	Warm Bronze Br. PVD	1.585
149	Finox Br. Nickel	1.355	710	Brass PVD	1.486
299	Matte Black	1.355	727	Brass Br. PVD	1.585
720	Nickel PVD	1.486	246	Gold PVD	1.688
706	Black Metal PVD	1.486	716	Gold Br. PVD	1.688
707	Black Metal Br. PVD	1.585	187	Aged Bronze	1.585
030	Copper PVD	1.486	713	Antique Brass	1.585
708	Copper Br. PVD	1.585	845	Dark Bronze	1.585
735	Warm Bronze PVD	1.486			

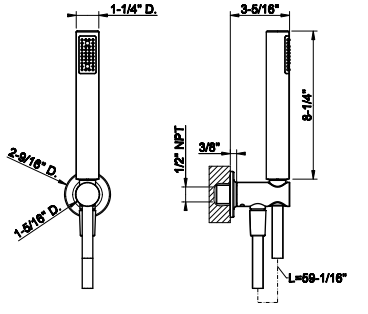

HANDSHOWER SETS

54023

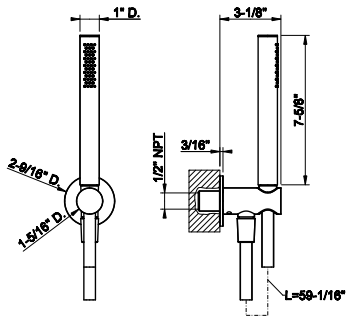

Handshower set
- Fixed hook.
- Wall elbow
- 59” flex hose
- Max flow rate 1.75 GPM



239	Steel Br.	1.006	708	Copper Br. PVD	1.487
299	Matte Black	1.356	726	Warm Bronze Br. PVD	1.487
707	Black Metal Br. PVD	1.487	727	Brass Br. PVD	1.487

26623

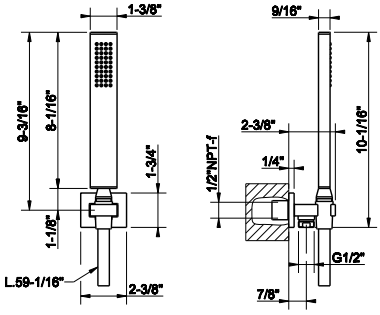

Handshower set
- Fixed hook
- Wall elbow
- 59” flex hose
- Max flow rate 1.75 GPM



031	Chrome	1.023	030	Copper PVD	1.514
149	Finox Br. Nickel	1.380	708	Copper Br. PVD	1.616
299	Matte Black	1.380	735	Warm Bronze PVD	1.514
720	Nickel PVD	1.514	726	Warm Bronze Br. PVD	1.616
706	Black Metal PVD	1.514	710	Brass PVD	1.514
707	Black Metal Br. PVD	1.616	727	Brass Br. PVD	1.616

59123

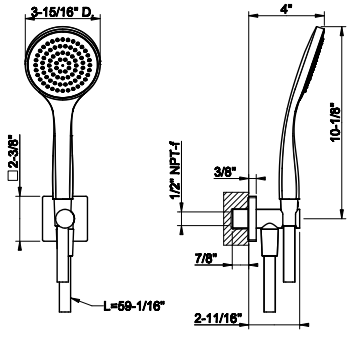

Handshower set
- Fixed hook.
- Wall elbow
- 59” flex hose
- Max flow rate 1.75 GPM



031	Chrome	557	708	Copper Br. PVD	879
149	Finox Br. Nickel	751	735	Warm Bronze PVD	824
299	Matte Black	751	726	Warm Bronze Br. PVD	879
720	Nickel PVD	824	710	Brass PVD	824
706	Black Metal PVD	824	727	Brass Br. PVD	879
707	Black Metal Br. PVD	879	279	Matte White	751
030	Copper PVD	824			

35373

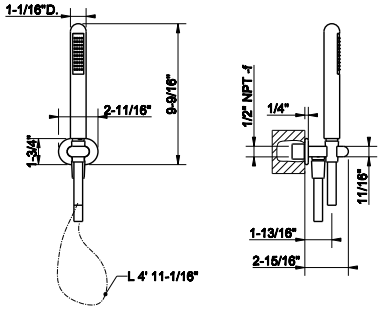

Handshower set
- Fixed hook
- Wall elbow
- 59” flex hose
- Max flow rate 1.75 GPM



031	Chrome	919	125	Copper Br. GHRC	1.195
299	Matte Black	1.242	126	Black Metal Br. GHRC	1.195
147	Chrome Br.	1.242	713	Antique Brass	1.455
123	Copper GHRC	1.103	279	Matte White	1.242
124	Black Metal GHRC	1.103			

HANDSHOWER SETS



39323

Handshower set
- Fixed hook.
- Wall elbow
- 59” flex hose
- Max flow rate 1.75 GPM

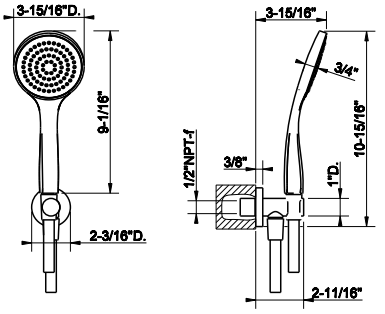

031	Chrome	736	299	Matte Black	995
149	Finox Br. Nickel	995			



63099

Magnetic anti-limestone handshower set
- Fixed hook
- Wall elbow
- 59” Cromalux flex hose
- Max flow rate 1.75 GPM

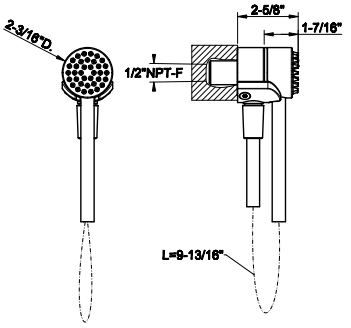

031	Chrome	1.213	726	Warm Bronze Br. PVD	1.916
149	Finox Br. Nickel	1.638	710	Brass PVD	1.794
299	Matte Black	1.638	727	Brass Br. PVD	1.916
720	Nickel PVD	1.794	246	Gold PVD	2.037
706	Black Metal PVD	1.794	716	Gold Br. PVD	2.037
707	Black Metal Br. PVD	1.916	187	Aged Bronze	1.916
030	Copper PVD	1.794	713	Antique Brass	1.916
708	Copper Br. PVD	1.916	845	Dark Bronze	1.916
735	Warm Bronze PVD	1.794			



63199

Magnetic anti-limestone handshower set
- Fixed hook
- Wall elbow
- 59” flex hose in black
- Max flow rate 1.75 GPM

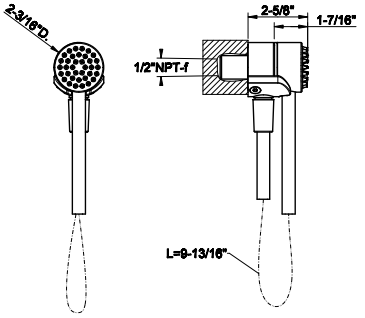

031	Chrome	1.213	726	Warm Bronze Br. PVD	1.916
149	Finox Br. Nickel	1.638	710	Brass PVD	1.794
299	Matte Black	1.638	727	Brass Br. PVD	1.916
720	Nickel PVD	1.794	246	Gold PVD	2.037
706	Black Metal PVD	1.794	716	Gold Br. PVD	2.037
707	Black Metal Br. PVD	1.916	187	Aged Bronze	1.916
030	Copper PVD	1.794	713	Antique Brass	1.916
708	Copper Br. PVD	1.916	845	Dark Bronze	1.916
735	Warm Bronze PVD	1.794			



63057

Adjustable handshower hook

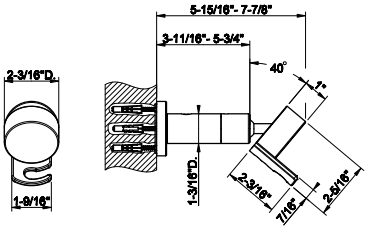

031	Chrome	1.150	726	Warm Bronze Br. PVD	1.816
149	Finox Br. Nickel	1.555	710	Brass PVD	1.701
299	Matte Black	1.555	727	Brass Br. PVD	1.816
720	Nickel PVD	1.701	246	Gold PVD	1.931
706	Black Metal PVD	1.701	716	Gold Br. PVD	1.931
707	Black Metal Br. PVD	1.816	187	Aged Bronze	1.816
030	Copper PVD	1.701	713	Antique Brass	1.816
708	Copper Br. PVD	1.816	845	Dark Bronze	1.816
735	Warm Bronze PVD	1.701			

HANDSHOWER SETS

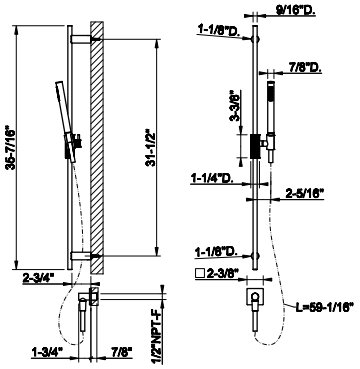

73541

Handshower and adjustable sliding rail set. RIGATO
- Adjustable bar
- Adjustable hook
- 59-1/16" hose length
- Wall elbow
- Max flowrate 1.75 GPM

031	Chrome	1.885	708	Copper Br. PVD	2.980
149	Finox Br. Nickel	2.548	735	Warm Bronze PVD	2.793
299	Matte Black	2.548	726	Warm Bronze Br. PVD	2.980
706	Black Metal PVD	2.793	710	Brass PVD	2.793
707	Black Metal Br. PVD	2.980	727	Brass Br. PVD	2.980
030	Copper PVD	2.793			



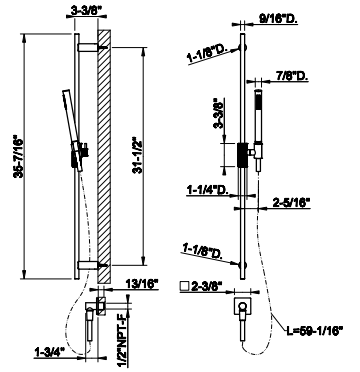

73641

Handshower and adjustable sliding rail set. DIAMANTATO
- Adjustable bar
- Adjustable hook
- 59-1/16" hose length
- Wall elbow
- Max flow rate 1.75 GPM

031	Chrome	1.885	708	Copper Br. PVD	2.980
149	Finox Br. Nickel	2.548	735	Warm Bronze PVD	2.793
299	Matte Black	2.548	726	Warm Bronze Br. PVD	2.980
706	Black Metal PVD	2.793	710	Brass PVD	2.793
707	Black Metal Br. PVD	2.980	727	Brass Br. PVD	2.980
030	Copper PVD	2.793			



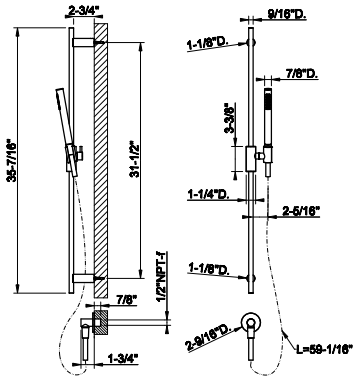

70042

Handshower and adjustable sliding rail set. UNITO
- Adjustable bar
- Adjustable hook
- 59" flex hose
- Wall elbow
- Max flow rate 1.75 GPM

031	Chrome	1.596	708	Copper Br. PVD	2.522
149	Finox Br. Nickel	2.154	735	Warm Bronze PVD	2.363
299	Matte Black	2.154	726	Warm Bronze Br. PVD	2.522
720	Nickel PVD	2.363	710	Brass PVD	2.363
706	Black Metal PVD	2.363	727	Brass Br. PVD	2.522
707	Black Metal Br. PVD	2.522	845	Dark Bronze	2.522
030	Copper PVD	2.363			



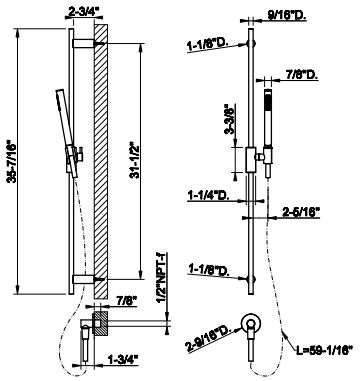

70342

Handshower and adjustable sliding rail set. TRAME
- Adjustable bar
- Adjustable hook
- 59" Flex hose
- Wall elbow
- Max flow rate 1.75GPM. Insert in desired finish included.

031	Chrome	1.696	708	Copper Br. PVD	2.680
149	Finox Br. Nickel	2.290	735	Warm Bronze PVD	2.510
720	Nickel PVD	2.510	726	Warm Bronze Br. PVD	2.680
706	Black Metal PVD	2.510	710	Brass PVD	2.510
707	Black Metal Br. PVD	2.680	727	Brass Br. PVD	2.680
030	Copper PVD	2.510			



HANDSHOWER SETS



70142

Handshower and adjustable sliding rail set. INTRECCIO
- Adjustable bar
- Adjustable hook
- 59” Flex hose
- Wall elbow
- Max flowrate 1.75GPM. Insert in desired finish included.

031	Chrome	1.696	708	Copper Br. PVD	2.680
149	Finox Br. Nickel	2.290	735	Warm Bronze PVD	2.510
299	Matte Black	2.290	726	Warm Bronze Br. PVD	2.680
720	Nickel PVD	2.510	710	Brass PVD	2.510
706	Black Metal PVD	2.510	727	Brass Br. PVD	2.680
707	Black Metal Br. PVD	2.680	845	Dark Bronze	2.680
030	Copper PVD	2.510			

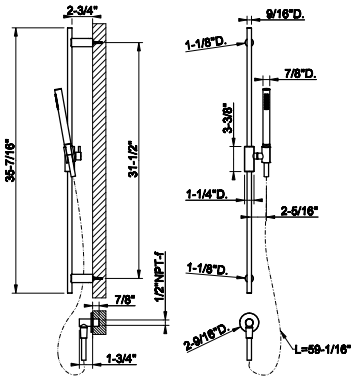



70442

Handshower and adjustable sliding rail set. CESELLO
- Adjustable bar
- Adjustable hook
- 59” Flex hose
- Wall elbow
- Max flow rate 1.75GPM. Insert in desired finish included.

031	Chrome	1.696	708	Copper Br. PVD	2.680
149	Finox Br. Nickel	2.290	735	Warm Bronze PVD	2.510
299	Matte Black	2.290	726	Warm Bronze Br. PVD	2.680
720	Nickel PVD	2.510	710	Brass PVD	2.510
706	Black Metal PVD	2.510	727	Brass Br. PVD	2.680
707	Black Metal Br. PVD	2.680	845	Dark Bronze	2.680
030	Copper PVD	2.510			

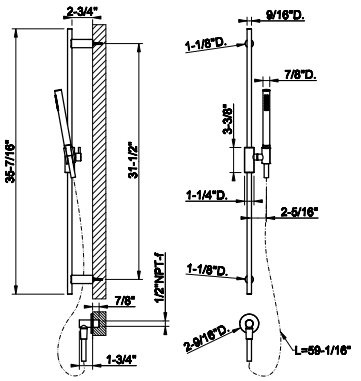



70042

Handshower and adjustable sliding rail set. UNITO
- Adjustable bar
- Adjustable hook
- 59” flex hose
- Wall elbow
- Max flow rate 1.75 GPM

031	Chrome	1.596

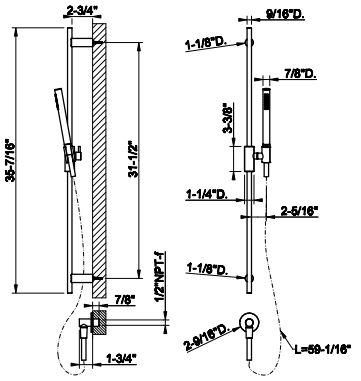



63482

Handshower and adjustable sliding rail set. DIAMANTATO
- Adjustable bar
- Adjustable hook
- 59” Flex hose
- Wall elbow
- Max flow rate 1.75 GPM.

149	Finox Br. Nickel	2.236	708	Copper Br. PVD	2.617
299	Matte Black	2.236	735	Warm Bronze PVD	2.450
720	Nickel PVD	2.450	726	Warm Bronze Br. PVD	2.617
706	Black Metal PVD	2.450	710	Brass PVD	2.450
707	Black Metal Br. PVD	2.617	727	Brass Br. PVD	2.617
030	Copper PVD	2.450	845	Dark Bronze	2.617

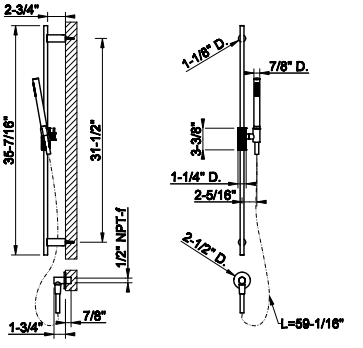

HANDSHOWER SETS

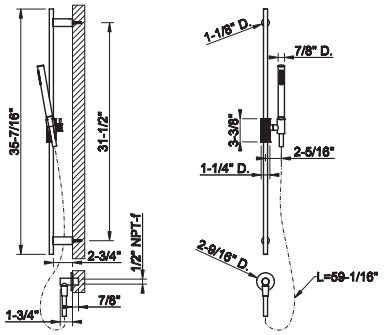

63582

Handshower and adjustable sliding rail set. RIGATO
- Adjustable bar
- Adjustable hook
- 59” Flex hose
- Wall elbow
- Max flow rate1.75 GPM.

031	Chrome	1.656	708	Copper Br. PVD	2.617
149	Finox Br. Nickel	2.236	735	Warm Bronze PVD	2.450
299	Matte Black	2.236	726	Warm Bronze Br. PVD	2.617
720	Nickel PVD	2.450	710	Brass PVD	2.450
706	Black Metal PVD	2.450	727	Brass Br. PVD	2.617
707	Black Metal Br. PVD	2.617	845	Dark Bronze	2.617
030	Copper PVD	2.450			



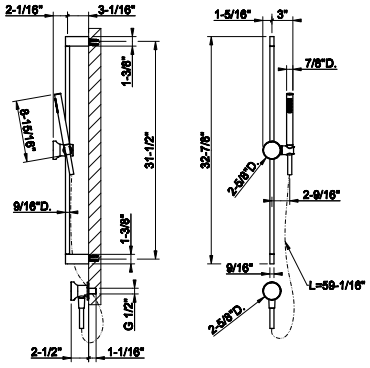

66142

Handshower and adjustable sliding rail set
- Adjustable bar
- Adjustable hook
- 59” Flex hose
- Wall elbow
- Max flow rate 1.75GPM. Insert in desired finish included. Can be combined with the insert 66600 and 66602 of the desired finish.

031	Chrome	2.399	707	Black Metal Br. PVD	3.792
149	Finox Br. Nickel	3.239	708	Copper Br. PVD	3.792
299	Matte Black	3.239	726	Warm Bronze Br. PVD	3.792
720	Nickel PVD	3.552	727	Brass Br. PVD	3.792
706	Black Metal PVD	3.552	845	Dark Bronze	3.792



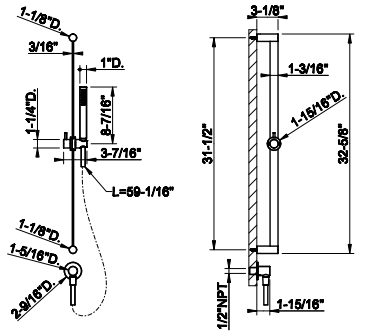

54045

Handshower and adjustable sliding rail set
- Adjustable bar
- Adjustable hook
- 59” flex hose
- Wall elbow
- Max flow rate 1.75 GPM

239	Steel Br.	2.450	708	Copper Br. PVD	3.626
299	Matte Black	3.308	726	Warm Bronze Br. PVD	3.626
707	Black Metal Br. PVD	3.626	727	Brass Br. PVD	3.626



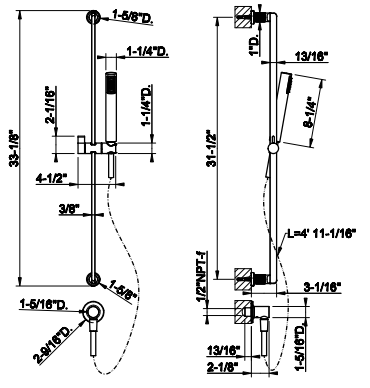

58142

Handshower and adjustable sliding rail set
- Adjustable bar
- Adjustable hook
- 59” Flex hose
- Wall elbow
- Max flow rate 1.75 GPM

031	Chrome	2.116	726	Warm Bronze Br. PVD	3.346
149	Finox Br. Nickel	2.859	710	Brass PVD	3.134
299	Matte Black	2.859	727	Brass Br. PVD	3.346
720	Nickel PVD	3.134	246	Gold PVD	3.556
706	Black Metal PVD	3.134	716	Gold Br. PVD	3.556
707	Black Metal Br. PVD	3.346	845	Dark Bronze	3.346
030	Copper PVD	3.134	187	Aged Bronze	3.346
708	Copper Br. PVD	3.346	713	Antique Brass	3.346
735	Warm Bronze PVD	3.134			





65142

Handshower and adjustable sliding rail set
- Adjustable bar
- Adjustable hook
- 59” Flex hose
- Wall elbow
- Max flow rate 1.75 GPM

031	Chrome	3.036	735	Warm Bronze PVD	4.494
149	Finox Br. Nickel	4.099	726	Warm Bronze Br. PVD	4.797
299	Matte Black	4.099	710	Brass PVD	4.494
720	Nickel PVD	4.494	727	Brass Br. PVD	4.797
706	Black Metal PVD	4.494	246	Gold PVD	5.101
707	Black Metal Br. PVD	4.797	716	Gold Br. PVD	5.101
030	Copper PVD	4.494	187	Aged Bronze	4.797
708	Copper Br. PVD	4.797	713	Antique Brass	4.797

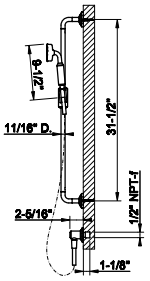



26642

Handshower and adjustable sliding rail set
- Adjustable bar
- Adjustable hook
- 59” flex hose
- Wall elbow
- Max flow rate 1.75 GPM

031	Chrome	1.958	030	Copper PVD	2.897
149	Finox Br. Nickel	2.643	708	Copper Br. PVD	3.094
299	Matte Black	2.643	735	Warm Bronze PVD	2.897
720	Nickel PVD	2.897	726	Warm Bronze Br. PVD	3.094
706	Black Metal PVD	2.897	710	Brass PVD	2.897
707	Black Metal Br. PVD	3.094	727	Brass Br. PVD	3.094

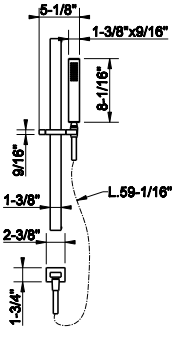



35342

Handshower sliding rail set
- Adjustable hook
- 59” flex hose
- Wall elbow
- Max flow rate 1.75 GPM

031	Chrome	1.782	125	Copper Br. GHRC	2.317
299	Matte Black	2.405	126	Black Metal Br. GHRC	2.317
147	Chrome Br.	2.405	713	Antique Brass	2.816
123	Copper GHRC	2.138	279	Matte White	2.405
124	Black Metal GHRC	2.138			

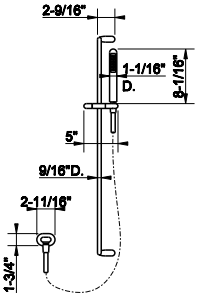



59242

Handshower and adjustable sliding rail set
- Adjustable bar
- Adjustable hook
- 59” Flex hose
- Wall elbow
- Max flow rate 1.75 GPM

031	Chrome	911	708	Copper Br. PVD	1.439
149	Finox Br. Nickel	1.231	735	Warm Bronze PVD	1.348
299	Matte Black	1.231	726	Warm Bronze Br. PVD	1.439
720	Nickel PVD	1.348	710	Brass PVD	1.348
706	Black Metal PVD	1.348	727	Brass Br. PVD	1.439
707	Black Metal Br. PVD	1.439	279	Matte White	1.231
030	Copper PVD	1.348			

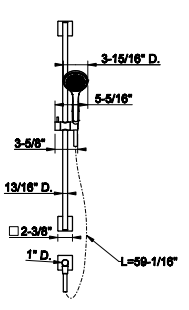

HANDSHOWER SETS

39342

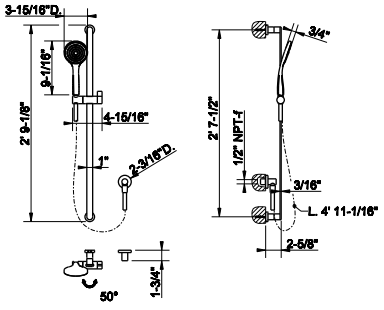

Handshower and adjustable sliding rail set
- Adjustable bar
- Adjustable hook
- 59” Flex hose
- Wall elbow
- Max flow rate 1.75 GPM



031	Chrome	1.691	299	Matte Black	2.284
149	Finox Br. Nickel	2.284			

71442

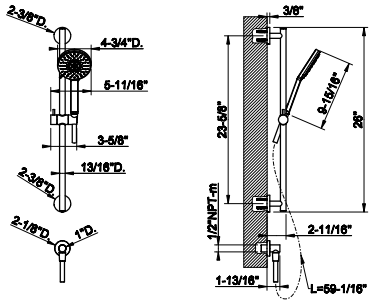

Handshower and adjustable sliding rail set
- Dual fuction handshower
- Adjustable bar
- Adjustable hook
- 59” Flex hose
- Wall elbow
- Max flow rate 1.75 GPM



031	Chrome	825	299	Matte Black	1.115
149	Finox Br. Nickel	1.115			



SHOWER G
SWING SYSTEM

GESSI

1. RIGATO

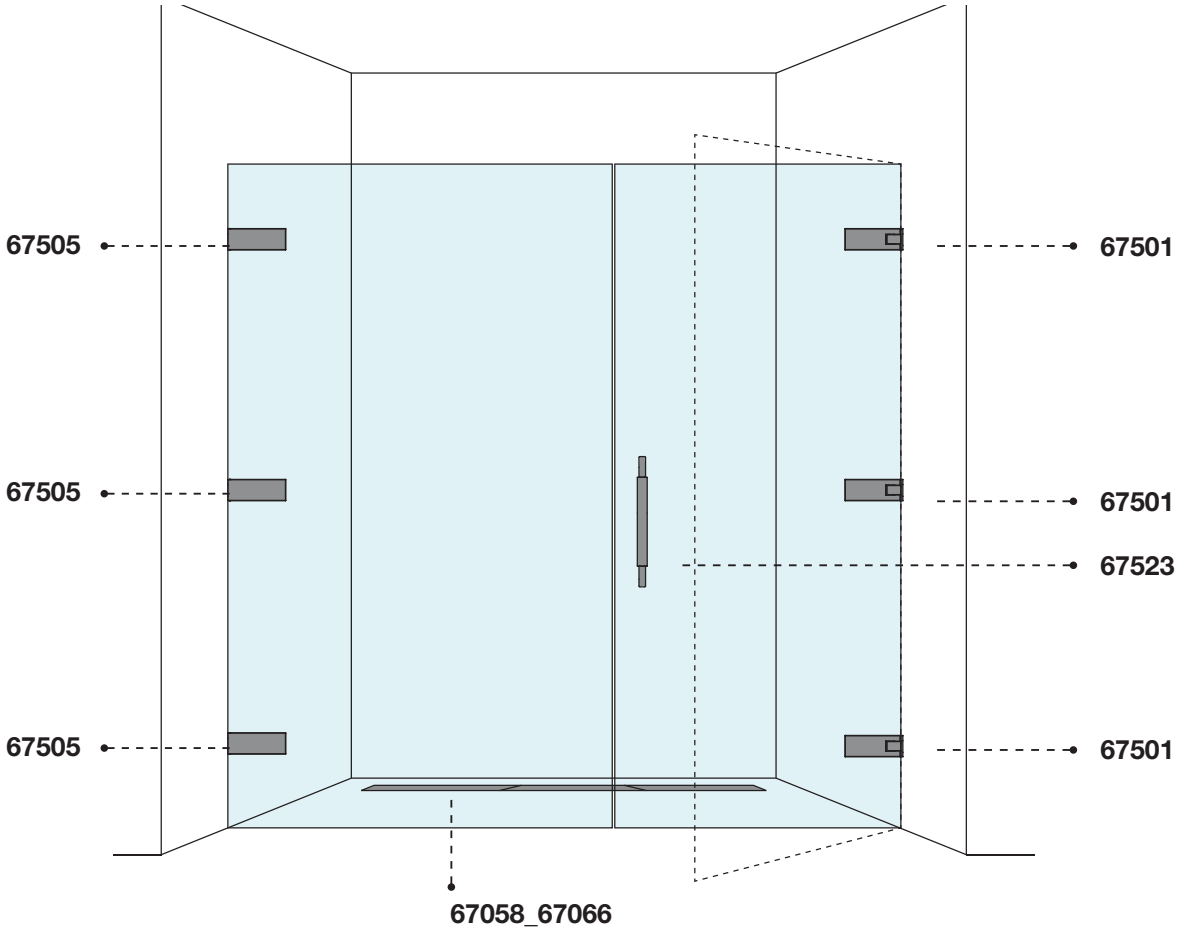

2. DIAMANTATO

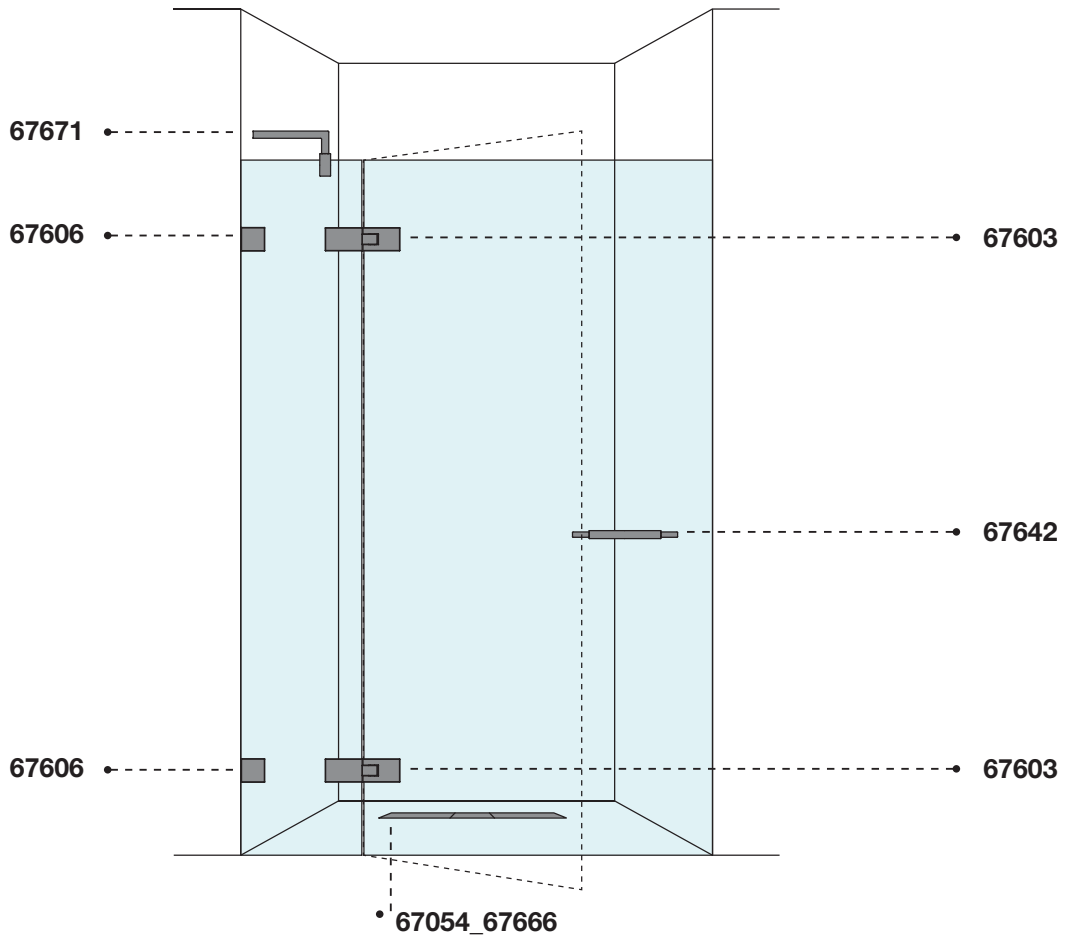

3.
RIGATO

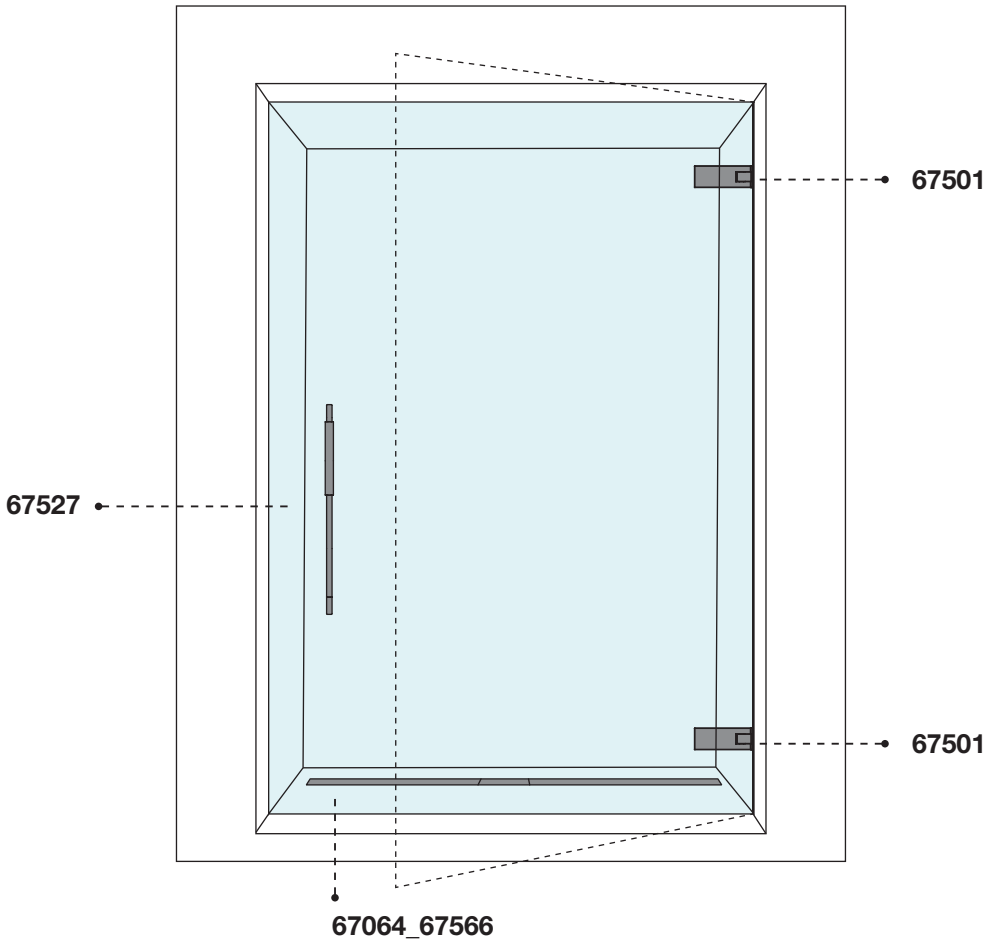

4.
DIAMANTATO

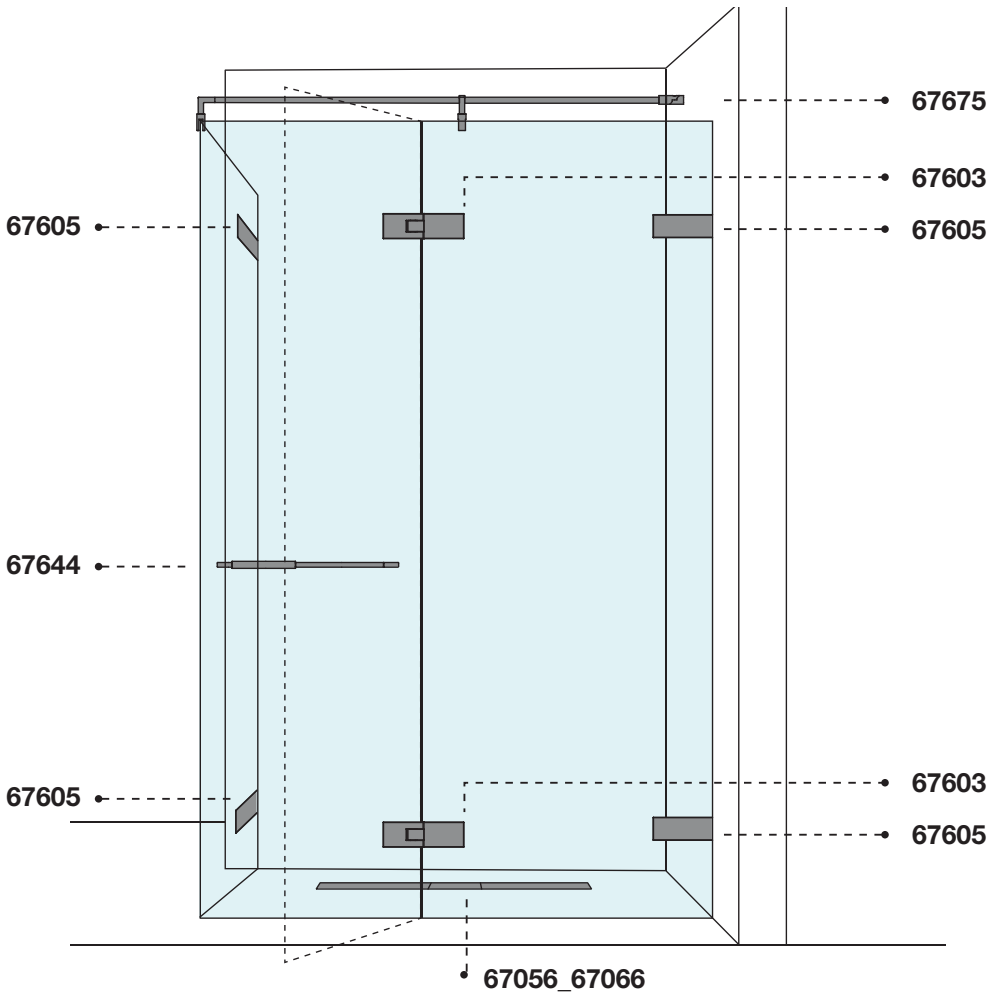



SHOWER G SWING SYSTEM RIGATO

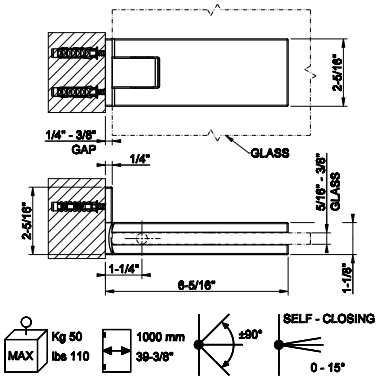

67501

Wall-Glass self-centering hinge. RIGATO. If the door exceeds 110 lbs or 39-3/8" width, the use of 3 hinges is recommended.

- For5/16" to 3/8" (8-10mm) glass
- 6-5/16"W x 2-5/16"H
- Self-centering from 15°
- Up to 110-lb or 39-3/8"W door with 2 hinges
- Opens 90° in each direction



031	Chrome	980	735	Warm Bronze PVD	1.451
149	Finox Br. Nickel	1.323	726	Warm Bronze Br. PVD	1.548
299	Matte Black	1.323	710	Brass PVD	1.451
147	Chrome Br.	1.323	727	Brass Br. PVD	1.548
720	Nickel PVD	1.451	246	Gold PVD	1.646
706	Black Metal PVD	1.451	716	Gold Br. PVD	1.646
707	Black Metal Br. PVD	1.548	187	Aged Bronze	1.548
030	Copper PVD	1.451	713	Antique Brass	1.548
708	Copper Br. PVD	1.548	845	Dark Bronze	1.548

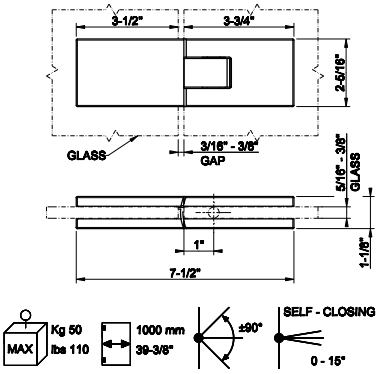

67503

Glass-Glass self-centering hinge. RIGATO. If the door exceeds 110 lbs or 39-3/8" width, the use of 3 hinges is recommended.

- For 5/16" to 3/8" (8-10mm) glass
- 7-1/2" W x 2-5/16"H
- Self-centering from 15°
- Up to 110-lb or 39-3/8"W door with 2 hinges
- Opens 90° in each direction



031	Chrome	1.400	735	Warm Bronze PVD	2.072
149	Finox Br. Nickel	1.890	726	Warm Bronze Br. PVD	2.212
299	Matte Black	1.890	710	Brass PVD	2.072
147	Chrome Br.	1.890	727	Brass Br. PVD	2.212
720	Nickel PVD	2.072	246	Gold PVD	2.352
706	Black Metal PVD	2.072	716	Gold Br. PVD	2.352
707	Black Metal Br. PVD	2.212	187	Aged Bronze	2.212
030	Copper PVD	2.072	713	Antique Brass	2.212
708	Copper Br. PVD	2.212	845	Dark Bronze	2.212

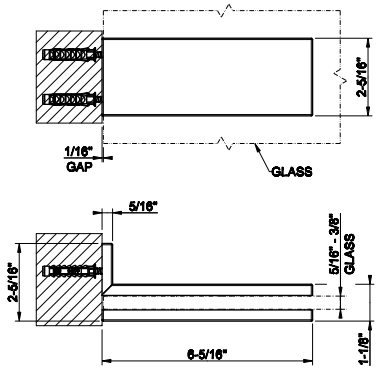

67505

Wall-Glass clamp. RIGATO

- For 5/16" to 3/8" (8-10mm) glass
- 6-5/16"W x 2-5/16"H



031	Chrome	551	735	Warm Bronze PVD	816
149	Finox Br. Nickel	745	726	Warm Bronze Br. PVD	870
299	Matte Black	745	710	Brass PVD	816
147	Chrome Br.	745	727	Brass Br. PVD	870
720	Nickel PVD	816	246	Gold PVD	926
706	Black Metal PVD	816	716	Gold Br. PVD	926
707	Black Metal Br. PVD	870	187	Aged Bronze	870
030	Copper PVD	816	713	Antique Brass	870
708	Copper Br. PVD	870	845	Dark Bronze	870

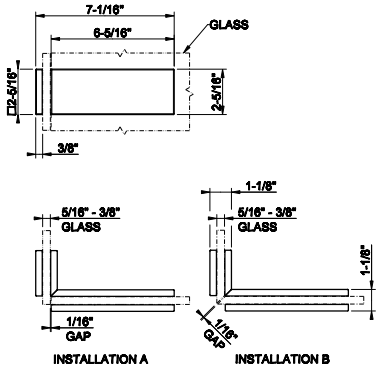

67507

Angular Glass-Glass clamp. RIGATO

- For 5/16" to 3/8" (8-10mm) glass
- Front clamp 6-5/16"W x 2-5/16"H; Side clamp 2-5/16"W x 2-5/16"H



031	Chrome	662	735	Warm Bronze PVD	979
149	Finox Br. Nickel	894	726	Warm Bronze Br. PVD	1.045
299	Matte Black	894	710	Brass PVD	979
147	Chrome Br.	894	727	Brass Br. PVD	1.045
720	Nickel PVD	979	246	Gold PVD	1.110
706	Black Metal PVD	979	716	Gold Br. PVD	1.110
707	Black Metal Br. PVD	1.045	187	Aged Bronze	1.045
030	Copper PVD	979	713	Antique Brass	1.045
708	Copper Br. PVD	1.045	845	Dark Bronze	1.045



67506

Wall-Glass clamp. RIGATO
- For 5/16” to 3/8” (8-10mm) glass
- 2-5/16”W x 2-5/16”H

031	Chrome	551	735	Warm Bronze PVD	816
149	Finox Br. Nickel	745	726	Warm Bronze Br. PVD	870
299	Matte Black	745	710	Brass PVD	816
147	Chrome Br.	745	727	Brass Br. PVD	870
720	Nickel PVD	816	246	Gold PVD	926
706	Black Metal PVD	816	716	Gold Br. PVD	926
707	Black Metal Br. PVD	870	187	Aged Bronze	870
030	Copper PVD	816	713	Antique Brass	870
708	Copper Br. PVD	870	845	Dark Bronze	1.551

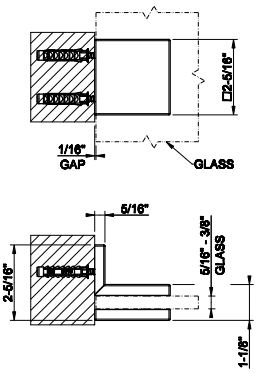

67571

Stabilization arm for frameless shower enclosure. RIGATO
- For 5/16” to 3/8” (8-10mm) glass
- 15-7/8” L x 3-15/16”H
- Adjustable wall bracket 45° left/right of center
- Adjustable glass clamp 360°

031	Chrome	451	735	Warm Bronze PVD	669
149	Finox Br. Nickel	610	726	Warm Bronze Br. PVD	713
299	Matte Black	610	710	Brass PVD	669
147	Chrome Br.	610	727	Brass Br. PVD	713
720	Nickel PVD	669	246	Gold PVD	758
706	Black Metal PVD	669	716	Gold Br. PVD	758
707	Black Metal Br. PVD	713	187	Aged Bronze	713
030	Copper PVD	669	713	Antique Brass	713
708	Copper Br. PVD	713	845	Dark Bronze	713

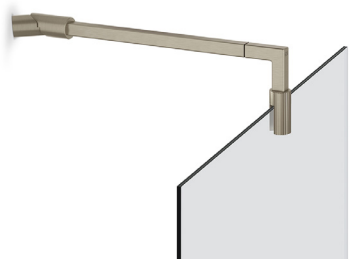

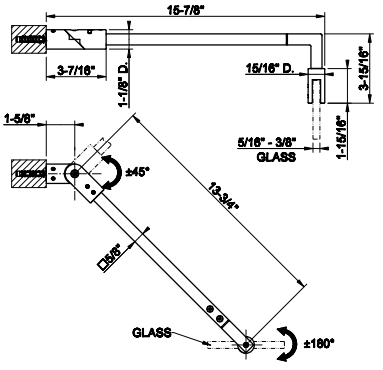

67573

Stabilization arm for frameless shower enclosure. Customizable length. RIGATO
- For 5/16” to 3/8” (8-10mm) glass
- 26-5/8”- 49-13/16” L x 3-15/16”H
- Adjustable wall bracket 45° left/right of center
- Adjustable glass clamp 360°

031	Chrome	571	735	Warm Bronze PVD	845
149	Finox Br. Nickel	771	726	Warm Bronze Br. PVD	902
299	Matte Black	771	710	Brass PVD	845
147	Chrome Br.	771	727	Brass Br. PVD	902
720	Nickel PVD	845	246	Gold PVD	958
706	Black Metal PVD	845	716	Gold Br. PVD	958
707	Black Metal Br. PVD	902	187	Aged Bronze	902
030	Copper PVD	845	713	Antique Brass	902
708	Copper Br. PVD	902	845	Dark Bronze	902

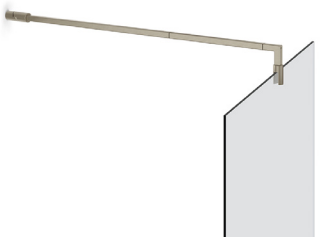

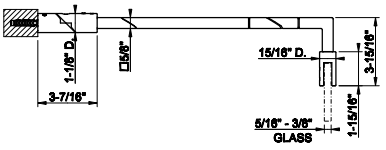

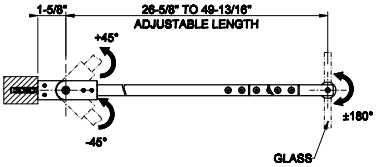

67575

T-shaped stabilization arm for frameless shower enclosure. Customizable length. RIGATO
- For 5/16” to 3/8” (8-10mm) glass
- 26-5/8” - 49-13/16”L x 3-15/16”H
- Positionable side arm 3-1/8”L
- Adjustable wall bracket 45° left/right of center

031	Chrome	850	735	Warm Bronze PVD	1.259
149	Finox Br. Nickel	1.148	726	Warm Bronze Br. PVD	1.345
299	Matte Black	1.148	710	Brass PVD	1.259
147	Chrome Br.	1.148	727	Brass Br. PVD	1.345
720	Nickel PVD	1.259	246	Gold PVD	1.429
706	Black Metal PVD	1.259	716	Gold Br. PVD	1.429
707	Black Metal Br. PVD	1.345	187	Aged Bronze	1.345
030	Copper PVD	1.259	713	Antique Brass	1.345
708	Copper Br. PVD	1.345	845	Dark Bronze	1.345

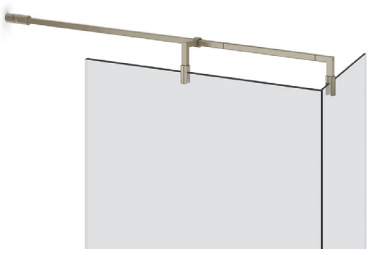

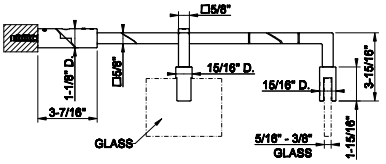

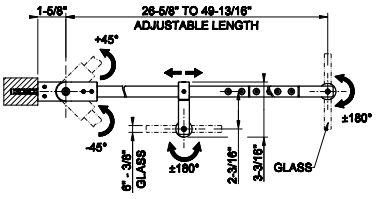

SHOWER G



67601

Wall-Glass self-centering hinge. DIAMANTATO. If the door exceeds 110 lbs or 39-3/8" width, the use of 3 hinges is recommended.
•For 5/16" to 3/8" (8-10mm) glass
• 6-5/16"W x 2-5/16"H
• Self-centering from 15°
• Up to 110-lb or 39-3/8"W door with 2 hinges
• Opens 90° in each direction

031	Chrome	980	735	Warm Bronze PVD	1.451
149	Finox Br. Nickel	1.323	726	Warm Bronze Br. PVD	1.548
299	Matte Black	1.323	710	Brass PVD	1.451
147	Chrome Br.	1.323	727	Brass Br. PVD	1.548
720	Nickel PVD	1.451	246	Gold PVD	1.646
706	Black Metal PVD	1.451	716	Gold Br. PVD	1.646
707	Black Metal Br. PVD	1.548	187	Aged Bronze	1.548
030	Copper PVD	1.451	713	Antique Brass	1.548
708	Copper Br. PVD	1.548	845	Dark Bronze	1.548

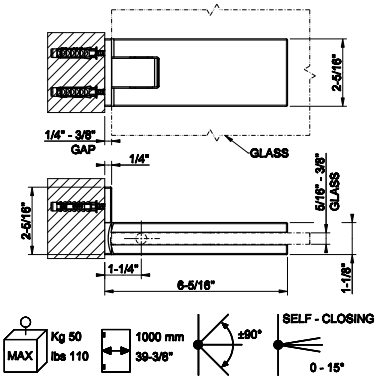



67603

Glass-Glass self-centering hinge. DIAMANTATO.If the door exceeds 110 lbs or 39-3/8" width, the use of 3 hinges is recommended.
•For 5/16" to 3/8" (8-10mm) glass
• 7-1/2" W x 2-5/16"H
• Self-centering from 15°
• Up to 110-lb or 39-3/8"W door with 2 hinges
• Opens 90° in each direction

031	Chrome	1.400	735	Warm Bronze PVD	2.072
149	Finox Br. Nickel	1.890	726	Warm Bronze Br. PVD	2.212
299	Matte Black	1.890	710	Brass PVD	2.072
147	Chrome Br.	1.890	727	Brass Br. PVD	2.212
720	Nickel PVD	2.072	246	Gold PVD	2.352
706	Black Metal PVD	2.072	716	Gold Br. PVD	2.352
707	Black Metal Br. PVD	2.212	187	Aged Bronze	2.212
030	Copper PVD	2.072	713	Antique Brass	2.212
708	Copper Br. PVD	2.212	845	Dark Bronze	2.212

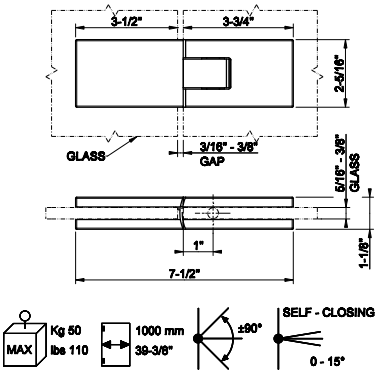



67605

Wall-Glass clamp. DIAMANTATO
• For 5/16" to 3/8" (8-10mm) glass
• 6-5/16"W x 2-5/16"H

031	Chrome	551	735	Warm Bronze PVD	816
149	Finox Br. Nickel	745	726	Warm Bronze Br. PVD	870
299	Matte Black	745	710	Brass PVD	816
147	Chrome Br.	745	727	Brass Br. PVD	870
720	Nickel PVD	816	246	Gold PVD	926
706	Black Metal PVD	816	716	Gold Br. PVD	926
707	Black Metal Br. PVD	870	187	Aged Bronze	870
030	Copper PVD	816	713	Antique Brass	870
708	Copper Br. PVD	870	845	Dark Bronze	870

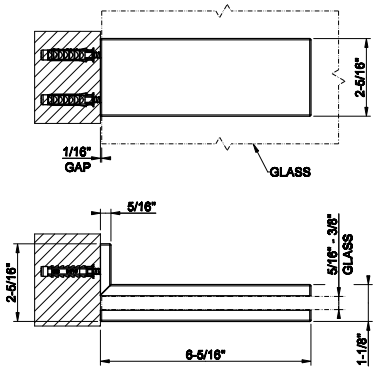



67607

Angular Glass-Glass clamp. DIAMANTATO
• For 5/16" to 3/8" (8-10mm) glass
• Front clamp 6-5/16"W x 2-5/16"H; Side clamp 2-5/16"W x2-5/16"H

031	Chrome	662	735	Warm Bronze PVD	979
149	Finox Br. Nickel	894	726	Warm Bronze Br. PVD	1.045
299	Matte Black	894	710	Brass PVD	979
147	Chrome Br.	894	727	Brass Br. PVD	1.045
720	Nickel PVD	979	246	Gold PVD	1.110
706	Black Metal PVD	979	716	Gold Br. PVD	1.110
707	Black Metal Br. PVD	1.045	187	Aged Bronze	1.045
030	Copper PVD	979	713	Antique Brass	1.045
708	Copper Br. PVD	1.045	845	Dark Bronze	1.045

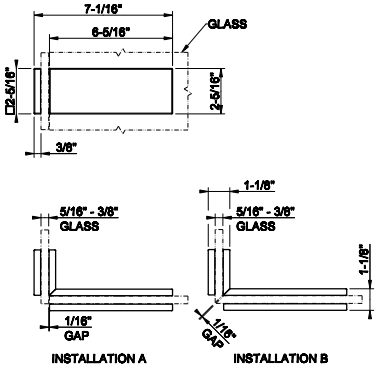

SHOWER G SWING SYSTEM DIAMANTATO

GESSI

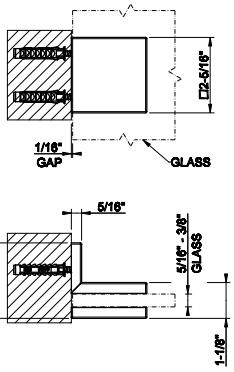

67606

Wall-Glass clamp. DIAMANTATO
- For 5/16" to 3/8" (8-10mm) glass
- 2-5/16"W x 2-5/16"H

031	Chrome	551	735	Warm Bronze PVD	816
149	Finox Br. Nickel	745	726	Warm Bronze Br. PVD	870
299	Matte Black	745	710	Brass PVD	816
147	Chrome Br.	745	727	Brass Br. PVD	870
720	Nickel PVD	816	246	Gold PVD	926
706	Black Metal PVD	816	716	Gold Br. PVD	926
707	Black Metal Br. PVD	870	187	Aged Bronze	870
030	Copper PVD	816	713	Antique Brass	870
708	Copper Br. PVD	870			



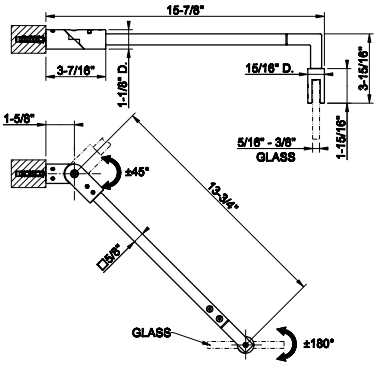

67671

Stabilization arm for frameless shower enclosure. DIAMANTATO
- For 5/16" to 3/8" (8-10mm) glass
- 15-7/8" L x 3-15/16"H
- Adjustable wall bracket 45° left/right of center
- Adjustable glass clamp 360°

031	Chrome	451	735	Warm Bronze PVD	669
149	Finox Br. Nickel	610	726	Warm Bronze Br. PVD	713
299	Matte Black	610	710	Brass PVD	669
147	Chrome Br.	610	727	Brass Br. PVD	713
720	Nickel PVD	669	246	Gold PVD	758
706	Black Metal PVD	669	716	Gold Br. PVD	758
707	Black Metal Br. PVD	713	187	Aged Bronze	713
030	Copper PVD	669	713	Antique Brass	713
708	Copper Br. PVD	713	845	Dark Bronze	713

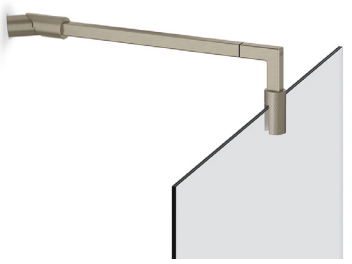

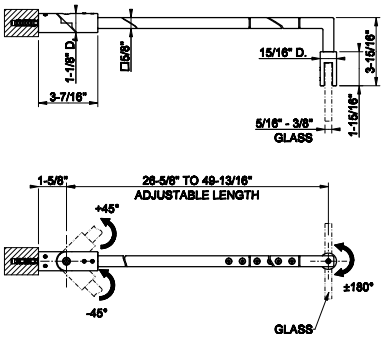

67673

Stabilization arm for frameless shower enclosure. Customizable length. DIAMANTATO.
- For 5/16" to 3/8" (8-10mm) glass
- 26-5/8"- 49-13/16" L x 3-15/16"H
- Adjustable wall bracket 45° left/right of center
- Adjustable glass clamp 360°

031	Chrome	571	735	Warm Bronze PVD	845
149	Finox Br. Nickel	771	726	Warm Bronze Br. PVD	902
299	Matte Black	771	710	Brass PVD	845
147	Chrome Br.	771	727	Brass Br. PVD	902
720	Nickel PVD	845	246	Gold PVD	958
706	Black Metal PVD	845	716	Gold Br. PVD	958
707	Black Metal Br. PVD	902	187	Aged Bronze	902
030	Copper PVD	845	713	Antique Brass	902
708	Copper Br. PVD	902	845	Dark Bronze	902

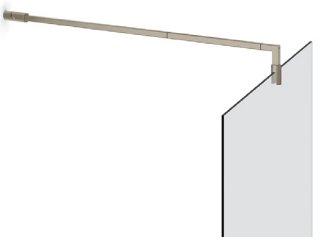

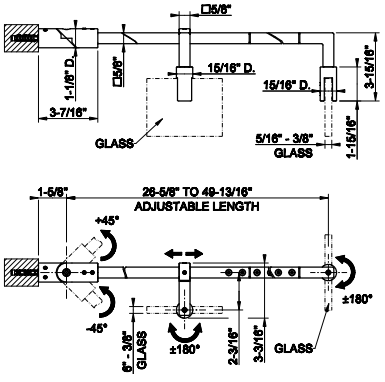

67675

T-shaped stabilization arm for frameless shower enclosure. Customizable length. DIAMANTATO
- For 5/16" to 3/8" (8-10mm) glass
- 26-5/8" - 49-13/16" L x 3-15/16"H
- Positionable side arm 3-1/8"L
- Adjustable wall bracket 45° left/right of center

031	Chrome	850	735	Warm Bronze PVD	1.259
149	Finox Br. Nickel	1.148	726	Warm Bronze Br. PVD	1.345
299	Matte Black	1.148	710	Brass PVD	1.259
147	Chrome Br.	1.148	727	Brass Br. PVD	1.345
720	Nickel PVD	1.259	246	Gold PVD	1.429
706	Black Metal PVD	1.259	716	Gold Br. PVD	1.429
707	Black Metal Br. PVD	1.345	187	Aged Bronze	1.345
030	Copper PVD	1.259	713	Antique Brass	1.345
708	Copper Br. PVD	1.345	845	Dark Bronze	1.345

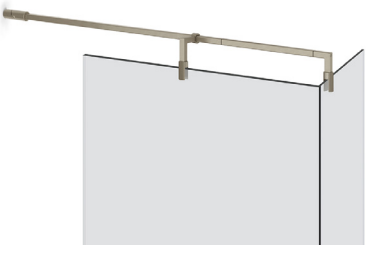



GESSI®

SHOWER G
ACCESSORIES



67521

8” Handle. Vertical/horizontal installation. RIGATO
- For 5/16” to 3/8” (8-10mm) glass
- 8-1/2” L x 2-3/16”D
- 7-7/8” center-to-center
- With interior finger pull, 1-1/8”L

031	Chrome	602	735	Warm Bronze PVD	889
149	Finox Br. Nickel	812	726	Warm Bronze Br. PVD	949
299	Matte Black	812	710	Brass PVD	889
147	Chrome Br.	812	727	Brass Br. PVD	949
720	Nickel PVD	889	246	Gold PVD	1.010
706	Black Metal PVD	889	716	Gold Br. PVD	1.010
707	Black Metal Br. PVD	949	187	Aged Bronze	949
030	Copper PVD	889	713	Antique Brass	949
708	Copper Br. PVD	949	845	Dark Bronze	949

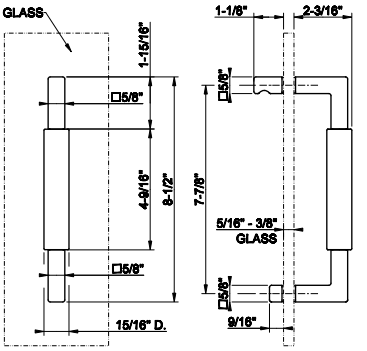



67523

12” Handle. Vertical/horizontal installation. RIGATO
- For 5/16” to 3/8” (8-10mm) glass
- 12-7/16” L x 2-3/16”D
- 11-13/16” center-to-center
- With interior finger pull, 1-1/8”L

031	Chrome	701	735	Warm Bronze PVD	1.037
149	Finox Br. Nickel	946	726	Warm Bronze Br. PVD	1.107
299	Matte Black	946	710	Brass PVD	1.037
147	Chrome Br.	946	727	Brass Br. PVD	1.107
720	Nickel PVD	1.037	246	Gold PVD	1.177
706	Black Metal PVD	1.037	716	Gold Br. PVD	1.177
707	Black Metal Br. PVD	1.107	187	Aged Bronze	1.107
030	Copper PVD	1.037	713	Antique Brass	1.107
708	Copper Br. PVD	1.107	845	Dark Bronze	1.107

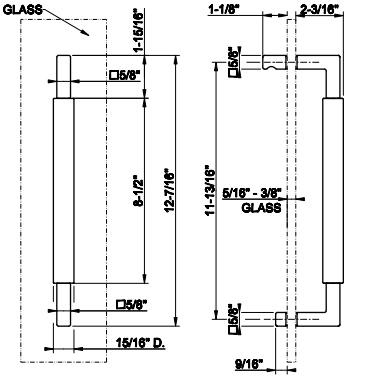



67525

18” Handle. Vertical/horizontal installation. RIGATO
- For 5/16” to 3/8” (8-10mm) glass
- 18-3/8”L x 2-3/16”D
- 17-11/16” center-to-center
- With interior finger pull, 1-1/8”L

031	Chrome	802	735	Warm Bronze PVD	1.186
149	Finox Br. Nickel	1.083	726	Warm Bronze Br. PVD	1.265
299	Matte Black	1.083	710	Brass PVD	1.186
147	Chrome Br.	1.083	727	Brass Br. PVD	1.265
720	Nickel PVD	1.186	246	Gold PVD	1.346
706	Black Metal PVD	1.186	716	Gold Br. PVD	1.346
707	Black Metal Br. PVD	1.265	187	Aged Bronze	1.265
030	Copper PVD	1.186	713	Antique Brass	1.265
708	Copper Br. PVD	1.265	845	Dark Bronze	1.265

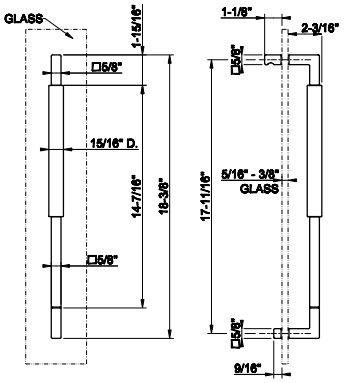



67527

24” Handle. Vertical/horizontal installation. RIGATO
- For 5/16” to 3/8” (8-10mm) glass
- 24-1/4”L x 2-3/16”D
- 23-5/8” center-to-center
- With interior finger pull, 1-1/8”L

031	Chrome	850	735	Warm Bronze PVD	1.259
149	Finox Br. Nickel	1.148	726	Warm Bronze Br. PVD	1.345
299	Matte Black	1.148	710	Brass PVD	1.259
147	Chrome Br.	1.148	727	Brass Br. PVD	1.345
720	Nickel PVD	1.259	246	Gold PVD	1.429
706	Black Metal PVD	1.259	716	Gold Br. PVD	1.429
707	Black Metal Br. PVD	1.345	187	Aged Bronze	1.345
030	Copper PVD	1.259	713	Antique Brass	1.345
708	Copper Br. PVD	1.345	845	Dark Bronze	1.345

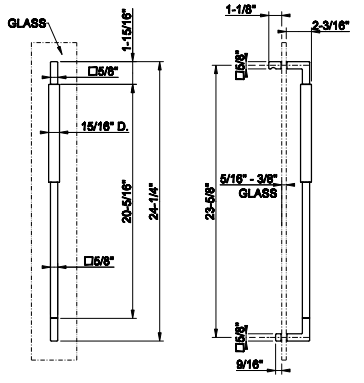

SHOWER G ACCESSORIES

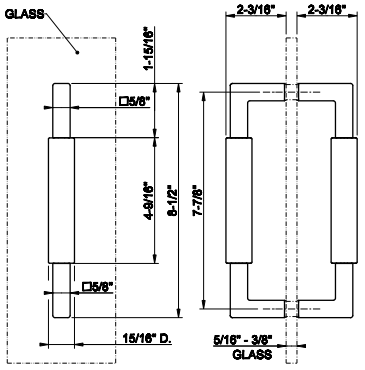

67531

8" Double handle. Vertical/horizontal installation. RIGATO
- For 5/16" to 3/8" (8-10mm) glass
- 8-1/2" L x 2-3/16"D each
- 7-7/8"center-to-center
- For back-to-back installation

031	Chrome	901	735	Warm Bronze PVD	1.333
149	Finox Br. Nickel	1.217	726	Warm Bronze Br. PVD	1.423
299	Matte Black	1.217	710	Brass PVD	1.333
147	Chrome Br.	1.217	727	Brass Br. PVD	1.423
720	Nickel PVD	1.333	246	Gold PVD	1.514
706	Black Metal PVD	1.333	716	Gold Br. PVD	1.514
707	Black Metal Br. PVD	1.423	187	Aged Bronze	1.423
030	Copper PVD	1.333	713	Antique Brass	1.423
708	Copper Br. PVD	1.423	845	Dark Bronze	1.423



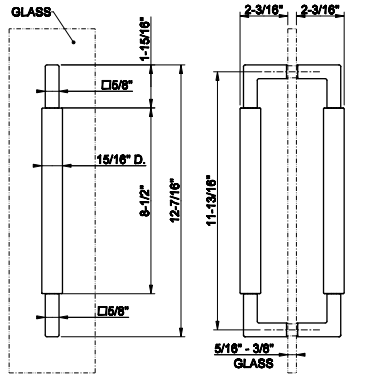

67533

12" Double handle. Vertical/horizontal installation. RIGATO
- For 5/16" to 3/8" (8-10mm) glass
- 12-7/16" L x 2-3/16"D each
- 11-13/16" center-to-center
- For back-to-back installation

031	Chrome	1.101	735	Warm Bronze PVD	1.630
149	Finox Br. Nickel	1.487	726	Warm Bronze Br. PVD	1.739
299	Matte Black	1.487	710	Brass PVD	1.630
147	Chrome Br.	1.487	727	Brass Br. PVD	1.739
720	Nickel PVD	1.630	246	Gold PVD	1.850
706	Black Metal PVD	1.630	716	Gold Br. PVD	1.850
707	Black Metal Br. PVD	1.739	187	Aged Bronze	1.739
030	Copper PVD	1.630	713	Antique Brass	1.739
708	Copper Br. PVD	1.739	845	Dark Bronze	1.739



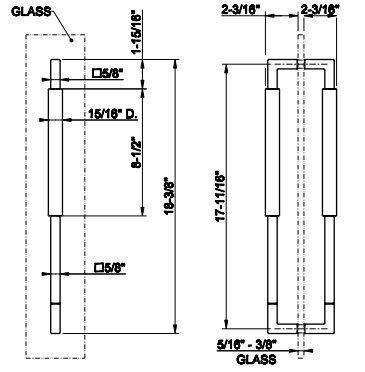

67535

18" Double handle. Vertical/horizontal installation. RIGATO
- For 5/16" to 3/8" (8-10mm) glass
- 18-3/8"L x 2-3/16"D each
- 17-11/16" center-to-center
- For back-to-back installation

031	Chrome	1.301	735	Warm Bronze PVD	1.926
149	Finox Br. Nickel	1.758	726	Warm Bronze Br. PVD	2.056
299	Matte Black	1.758	710	Brass PVD	1.926
147	Chrome Br.	1.758	727	Brass Br. PVD	2.056
720	Nickel PVD	1.926	246	Gold PVD	2.185
706	Black Metal PVD	1.926	716	Gold Br. PVD	2.185
707	Black Metal Br. PVD	2.056	187	Aged Bronze	2.056
030	Copper PVD	1.926	713	Antique Brass	2.056
708	Copper Br. PVD	2.056	845	Dark Bronze	2.056

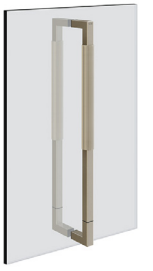

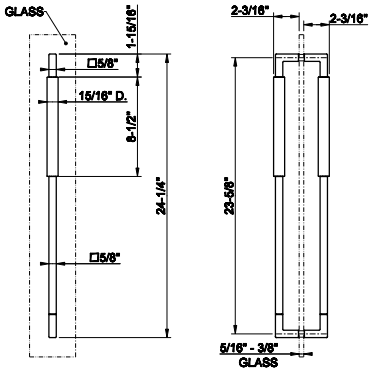

67537

24" Double handle. Vertical/horizontal installation. RIGATO
- For 5/16" to 3/8" (8-10mm) glass
- 24-1/4"L x 2-3/16"D each
- 23-5/8"center-to-center
- For back-to-back installation

031	Chrome	1.400	735	Warm Bronze PVD	2.072
149	Finox Br. Nickel	1.890	726	Warm Bronze Br. PVD	2.212
299	Matte Black	1.890	710	Brass PVD	2.072
147	Chrome Br.	1.890	727	Brass Br. PVD	2.212
720	Nickel PVD	2.072	246	Gold PVD	2.352
706	Black Metal PVD	2.072	716	Gold Br. PVD	2.352
707	Black Metal Br. PVD	2.212	187	Aged Bronze	2.212
030	Copper PVD	2.072	713	Antique Brass	2.212
708	Copper Br. PVD	2.212	845	Dark Bronze	2.212

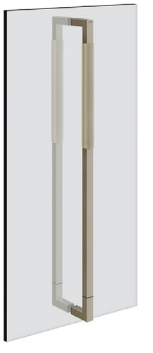

67541

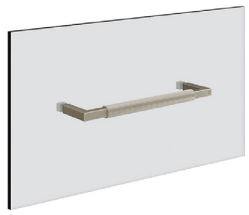

12” towel rail. RIGATO
- For 5/16” to 3/8” (8-10mm) glass
- 12-7/16”L x 3”D
- 11-13/16” center-to-center
- for Horizontal installation

031	Chrome	701	735	Warm Bronze PVD	1.037
149	Finox Br. Nickel	946	726	Warm Bronze Br. PVD	1.107
299	Matte Black	946	710	Brass PVD	1.037
147	Chrome Br.	946	727	Brass Br. PVD	1.107
720	Nickel PVD	1.037	246	Gold PVD	1.177
706	Black Metal PVD	1.037	716	Gold Br. PVD	1.177
707	Black Metal Br. PVD	1.107	187	Aged Bronze	1.107
030	Copper PVD	1.037	713	Antique Brass	1.107
708	Copper Br. PVD	1.107	845	Dark Bronze	1.107

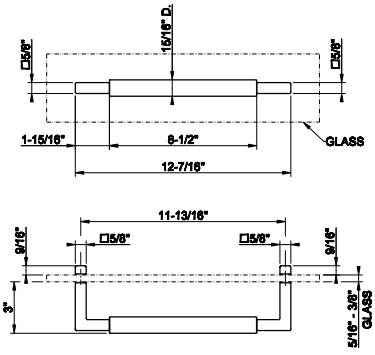

67543

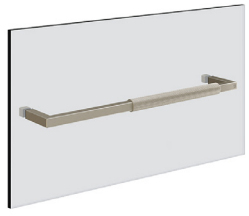

18” towel rail. RIGATO
- For 5/16” to 3/8” (8-10mm) glass
- 18-3/8”L x 3”D
- 17-11/16” center-to-center
- For horizontal installation

031	Chrome	802	735	Warm Bronze PVD	1.186
149	Finox Br. Nickel	1.083	726	Warm Bronze Br. PVD	1.265
299	Matte Black	1.083	710	Brass PVD	1.186
147	Chrome Br.	1.083	727	Brass Br. PVD	1.265
720	Nickel PVD	1.186	246	Gold PVD	1.346
706	Black Metal PVD	1.186	716	Gold Br. PVD	1.346
707	Black Metal Br. PVD	1.265	187	Aged Bronze	1.265
030	Copper PVD	1.186	713	Antique Brass	1.265
708	Copper Br. PVD	1.265	845	Dark Bronze	1.265

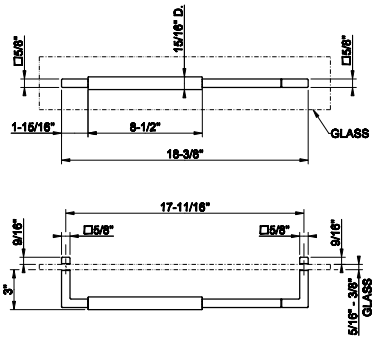

67545

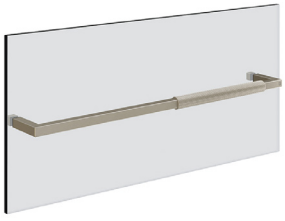

24” towel rail. RIGATO
- For 5/16” to 3/8” (8-10mm) glass
- 24-1/4”L x 3”D
- 23-5/8” center-to-center
- For horizontal installation

031	Chrome	850	735	Warm Bronze PVD	1.259
149	Finox Br. Nickel	1.148	726	Warm Bronze Br. PVD	1.345
299	Matte Black	1.148	710	Brass PVD	1.259
147	Chrome Br.	1.148	727	Brass Br. PVD	1.345
720	Nickel PVD	1.259	246	Gold PVD	1.429
706	Black Metal PVD	1.259	716	Gold Br. PVD	1.429
707	Black Metal Br. PVD	1.345	187	Aged Bronze	1.345
030	Copper PVD	1.259	713	Antique Brass	1.345
708	Copper Br. PVD	1.345	845	Dark Bronze	1.345

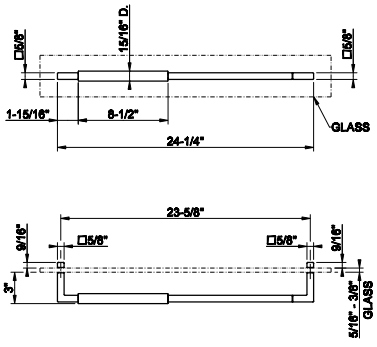

67542

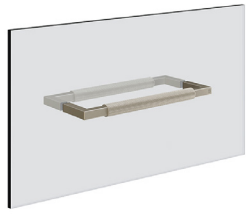

12” Handle and towel rail RIGATO
- For 5/16” to 3/8” (8-10mm) glass
- Towel rail 12-7/16”L x 3”D
- Interior handle 12-7/16”L x 2-3/16”D
- 11-13/16” center-to-center
- for Horizontal installation

031	Chrome	1.101	735	Warm Bronze PVD	1.630
149	Finox Br. Nickel	1.487	726	Warm Bronze Br. PVD	1.739
299	Matte Black	1.487	710	Brass PVD	1.630
147	Chrome Br.	1.487	727	Brass Br. PVD	1.739
720	Nickel PVD	1.630	246	Gold PVD	1.850
706	Black Metal PVD	1.630	716	Gold Br. PVD	1.850
707	Black Metal Br. PVD	1.739	187	Aged Bronze	1.739
030	Copper PVD	1.630	713	Antique Brass	1.739
708	Copper Br. PVD	1.739	845	Dark Bronze	1.739

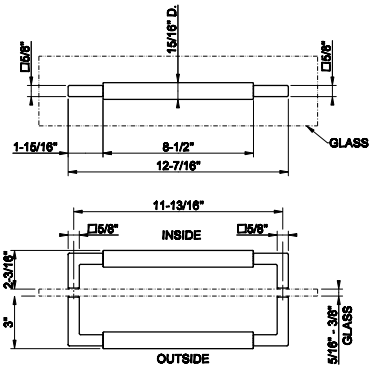

SHOWER G ACCESSORIES

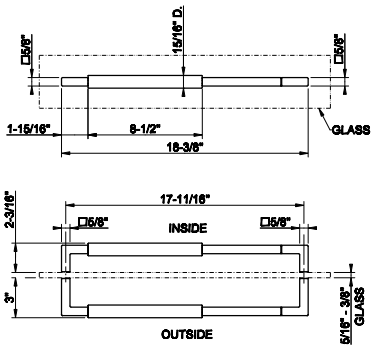

67544

18" Handle and towel rail RIGATO
- For 5/16" to 3/8" (8-10mm) glass
- Towel rail 18-3/8"L x 3"D
- Interior handle 18-3/8"L x 2-3/16"D
- 17-11/16" center-to-center
- For horizontal installation

031	Chrome	1.301	735	Warm Bronze PVD	1.926
149	Finox Br. Nickel	1.758	726	Warm Bronze Br. PVD	2.056
299	Matte Black	1.758	710	Brass PVD	1.926
147	Chrome Br.	1.758	727	Brass Br. PVD	2.056
720	Nickel PVD	1.926	246	Gold PVD	2.185
706	Black Metal PVD	1.926	716	Gold Br. PVD	2.185
707	Black Metal Br. PVD	2.056	187	Aged Bronze	2.056
030	Copper PVD	1.926	713	Antique Brass	2.056
708	Copper Br. PVD	2.056	845	Dark Bronze	2.056

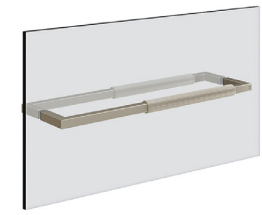

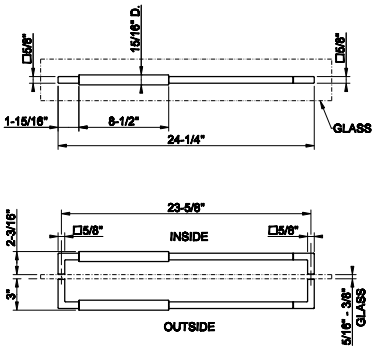

67546

24" Handle and towel rail RIGATO
- For 5/16" to 3/8" (8-10mm) glass
- Towel rail 24-1/4"L x 3"D
- Interior handle 24-1/4"L x 2-3/16"D
- 23-5/8" center-to-center
- For horizontal installation

031	Chrome	1.400	735	Warm Bronze PVD	2.072
149	Finox Br. Nickel	1.890	726	Warm Bronze Br. PVD	2.212
299	Matte Black	1.890	710	Brass PVD	2.072
147	Chrome Br.	1.890	727	Brass Br. PVD	2.212
720	Nickel PVD	2.072	246	Gold PVD	2.352
706	Black Metal PVD	2.072	716	Gold Br. PVD	2.352
707	Black Metal Br. PVD	2.212	187	Aged Bronze	2.212
030	Copper PVD	2.072	713	Antique Brass	2.212
708	Copper Br. PVD	2.212	845	Dark Bronze	2.212

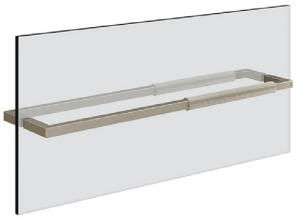

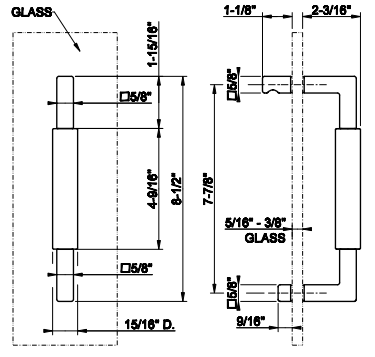

67621

8" Handle. Vertical/horizontal installation. DIAMANTATO
- For 5/16" to 3/8" (8-10mm) glass
- 8-1/2" L x 2-3/16"D
- 7-7/8" center-to-center
- With interior finger pull, 1-1/8"L

031	Chrome	602	735	Warm Bronze PVD	889
149	Finox Br. Nickel	812	726	Warm Bronze Br. PVD	949
299	Matte Black	812	710	Brass PVD	889
147	Chrome Br.	812	727	Brass Br. PVD	949
720	Nickel PVD	889	246	Gold PVD	1.010
706	Black Metal PVD	889	716	Gold Br. PVD	1.010
707	Black Metal Br. PVD	949	187	Aged Bronze	949
030	Copper PVD	889	713	Antique Brass	949
708	Copper Br. PVD	949	845	Dark Bronze	949



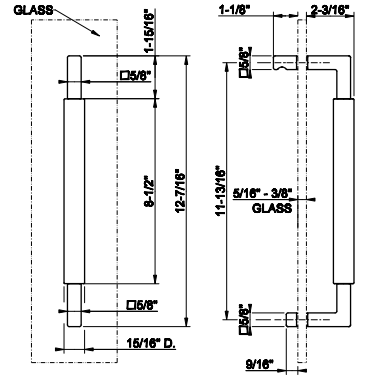

67623

12" Handle. Vertical/horizontal installation. DIAMANTATO
- For 5/16" to 3/8" (8-10mm) glass
- 12-7/16" L x 2-3/16"D
- 11-13/16" center-to-center
- With interior finger pull, 1-1/8"L

031	Chrome	701	735	Warm Bronze PVD	1.037
149	Finox Br. Nickel	946	726	Warm Bronze Br. PVD	1.107
299	Matte Black	946	710	Brass PVD	1.037
147	Chrome Br.	946	727	Brass Br. PVD	1.107
720	Nickel PVD	1.037	246	Gold PVD	1.177
706	Black Metal PVD	1.037	716	Gold Br. PVD	1.177
707	Black Metal Br. PVD	1.107	187	Aged Bronze	1.107
030	Copper PVD	1.037	713	Antique Brass	1.107
708	Copper Br. PVD	1.107	845	Dark Bronze	1.107

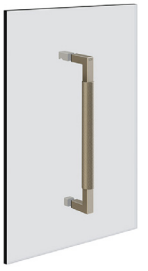



67625

18” Handle. Vertical/horizontal installation. DIAMANTATO
- For 5/16” to 3/8” (8-10mm) glass
- 18-3/8”L x 2-3/16”D
- 17-11/16” center-to-center
- With interior finger pull, 1-1/8”L

031	Chrome	802	735	Warm Bronze PVD	1.186
149	Finox Br. Nickel	1.083	726	Warm Bronze Br. PVD	1.265
299	Matte Black	1.083	710	Brass PVD	1.186
147	Chrome Br.	1.083	727	Brass Br. PVD	1.265
720	Nickel PVD	1.186	246	Gold PVD	1.346
706	Black Metal PVD	1.186	716	Gold Br. PVD	1.346
707	Black Metal Br. PVD	1.265	187	Aged Bronze	1.265
030	Copper PVD	1.186	713	Antique Brass	1.265
708	Copper Br. PVD	1.265	845	Dark Bronze	1.265

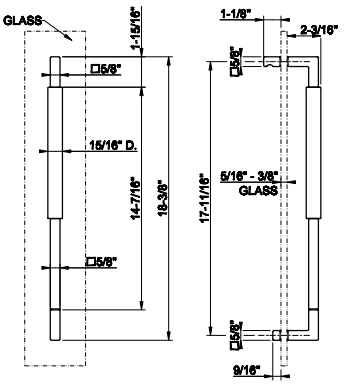



67627

24” Handle. Vertical/horizontal installation. DIAMANTATO
- For 5/16” to 3/8” (8-10mm) glass
- 24-1/4”L x 2-3/16”D
- 23-5/8” center-to-center
- With interior finger pull, 1-1/8”L

031	Chrome	850	735	Warm Bronze PVD	1.259
149	Finox Br. Nickel	1.148	726	Warm Bronze Br. PVD	1.345
299	Matte Black	1.148	710	Brass PVD	1.259
147	Chrome Br.	1.148	727	Brass Br. PVD	1.345
720	Nickel PVD	1.259	246	Gold PVD	1.429
706	Black Metal PVD	1.259	716	Gold Br. PVD	1.429
707	Black Metal Br. PVD	1.345	187	Aged Bronze	1.345
030	Copper PVD	1.259	713	Antique Brass	1.345
708	Copper Br. PVD	1.345	845	Dark Bronze	1.345

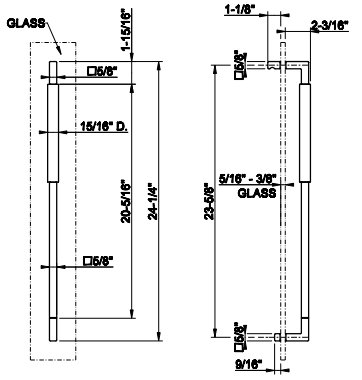



67631

8” Double handle. Vertical/horizontal installation. DIAMANTATO
- For 5/16” to 3/8” (8-10mm) glass
- 8-1-/-2”L x 2-3/16”D each
- 7-7/8” center-to-center
- For back-to-back installation

031	Chrome	901	735	Warm Bronze PVD	1.333
149	Finox Br. Nickel	1.217	726	Warm Bronze Br. PVD	1.423
299	Matte Black	1.217	710	Brass PVD	1.333
147	Chrome Br.	1.217	727	Brass Br. PVD	1.423
720	Nickel PVD	1.333	246	Gold PVD	1.514
706	Black Metal PVD	1.333	716	Gold Br. PVD	1.514
707	Black Metal Br. PVD	1.423	187	Aged Bronze	1.423
030	Copper PVD	1.333	713	Antique Brass	1.423
708	Copper Br. PVD	1.423	845	Dark Bronze	1.423

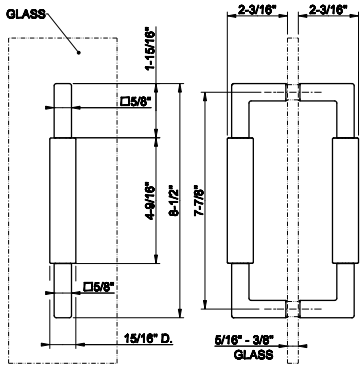



67633

12” Double handle. Vertical/horizontal installation. DIAMANTATO
- For 5/16” to 3/8” (8-10mm) glass
- 12-7/16”L x 2-3/16”D each
- 11-13/16” center-to-center
- For back-to-back installation

031	Chrome	1.101	735	Warm Bronze PVD	1.630
149	Finox Br. Nickel	1.487	726	Warm Bronze Br. PVD	1.739
299	Matte Black	1.487	710	Brass PVD	1.630
147	Chrome Br.	1.487	727	Brass Br. PVD	1.739
720	Nickel PVD	1.630	246	Gold PVD	1.850
706	Black Metal PVD	1.630	716	Gold Br. PVD	1.850
707	Black Metal Br. PVD	1.739	187	Aged Bronze	1.739
030	Copper PVD	1.630	713	Antique Brass	1.739
708	Copper Br. PVD	1.739	845	Dark Bronze	1.739

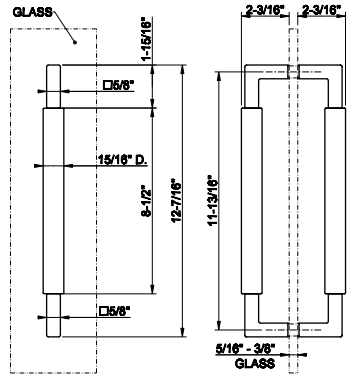

SHOWER G ACCESSORIES

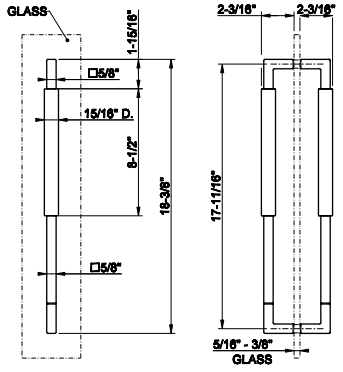

67635

18” Double handle. Vertical/horizontal installation. DIAMANTATO
- For 5/16” to 3/8” (8-10mm) glass
- 18-3/8”L x 2-3/16”D each
- 17-11/16” center-to-center
- For back-to-back installation

031	Chrome	1.301	735	Warm Bronze PVD	1.926
149	Finox Br. Nickel	1.758	726	Warm Bronze Br. PVD	2.056
299	Matte Black	1.758	710	Brass PVD	1.926
147	Chrome Br.	1.758	727	Brass Br. PVD	2.056
720	Nickel PVD	1.926	246	Gold PVD	2.185
706	Black Metal PVD	1.926	716	Gold Br. PVD	2.185
707	Black Metal Br. PVD	2.056	187	Aged Bronze	2.056
030	Copper PVD	1.926	713	Antique Brass	2.056
708	Copper Br. PVD	2.056	845	Dark Bronze	2.056



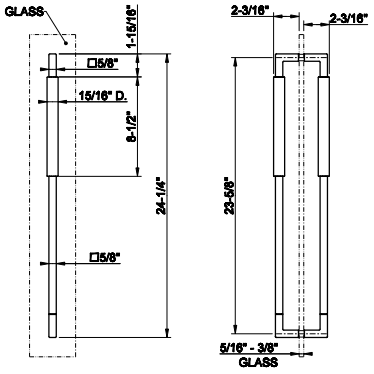

67637

24” Double handle. Vertical/horizontal installation. DIAMANTATO
- For 5/16” to 3/8” (8-10mm) glass
- 24-1/4”L x 2-3/16”D each
- 23-5/8” center-to-center
- For back-to-back installation

031	Chrome	1.400	735	Warm Bronze PVD	2.072
149	Finox Br. Nickel	1.890	726	Warm Bronze Br. PVD	2.212
299	Matte Black	1.890	710	Brass PVD	2.072
147	Chrome Br.	1.890	727	Brass Br. PVD	2.212
720	Nickel PVD	2.072	246	Gold PVD	2.352
706	Black Metal PVD	2.072	716	Gold Br. PVD	2.352
707	Black Metal Br. PVD	2.212	187	Aged Bronze	2.212
030	Copper PVD	2.072	713	Antique Brass	2.212
708	Copper Br. PVD	2.212	845	Dark Bronze	2.212



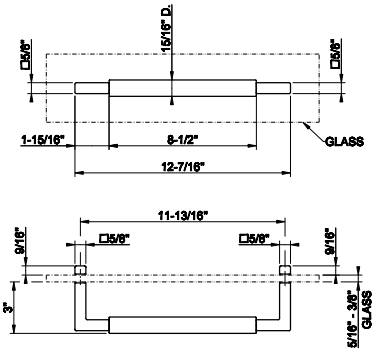

67641

12” towel rail. DIAMANTATO
- For 5/16” to 3/8” (8-10mm) glass
- 12-7/16”L x 3”D
- 11-13/16” center-to-center
- for Horizontal installation

031	Chrome	701	735	Warm Bronze PVD	1.037
149	Finox Br. Nickel	946	726	Warm Bronze Br. PVD	1.107
299	Matte Black	946	710	Brass PVD	1.037
147	Chrome Br.	946	727	Brass Br. PVD	1.107
720	Nickel PVD	1.037	246	Gold PVD	1.177
706	Black Metal PVD	1.037	716	Gold Br. PVD	1.177
707	Black Metal Br. PVD	1.107	187	Aged Bronze	1.107
030	Copper PVD	1.037	713	Antique Brass	1.107
708	Copper Br. PVD	1.107	845	Dark Bronze	1.107

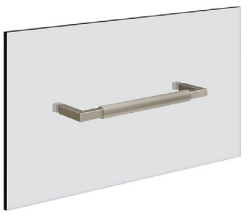

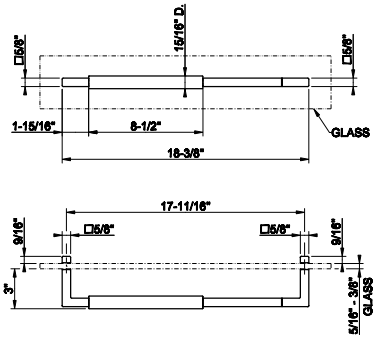

67643

18” towel rail. DIAMANTATO
- For 5/16” to 3/8” (8-10mm) glass
- 18-3/8”L x 3”D
- 17-11/16” center-to-center
- For horizontal installation

031	Chrome	802	735	Warm Bronze PVD	1.186
149	Finox Br. Nickel	1.083	726	Warm Bronze Br. PVD	1.265
299	Matte Black	1.083	710	Brass PVD	1.186
147	Chrome Br.	1.083	727	Brass Br. PVD	1.265
720	Nickel PVD	1.186	246	Gold PVD	1.346
706	Black Metal PVD	1.186	716	Gold Br. PVD	1.346
707	Black Metal Br. PVD	1.265	187	Aged Bronze	1.265
030	Copper PVD	1.186	713	Antique Brass	1.265
708	Copper Br. PVD	1.265	845	Dark Bronze	1.265

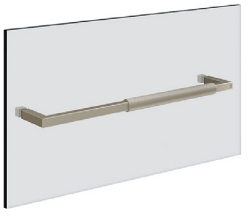

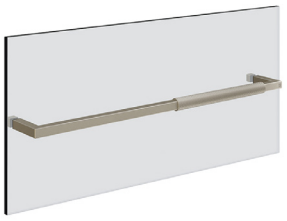

67645

24” towel rail. DIAMANTATO
- For 5/16” to 3/8” (8-10mm) glass
- 24-1/4”L x 3”D
- 23-5/8” center-to-center
- For horizontal installation

031	Chrome	850	735	Warm Bronze PVD	1.259
149	Finox Br. Nickel	1.148	726	Warm Bronze Br. PVD	1.345
299	Matte Black	1.148	710	Brass PVD	1.259
147	Chrome Br.	1.148	727	Brass Br. PVD	1.345
720	Nickel PVD	1.259	246	Gold PVD	1.429
706	Black Metal PVD	1.259	716	Gold Br. PVD	1.429
707	Black Metal Br. PVD	1.345	187	Aged Bronze	1.345
030	Copper PVD	1.259	713	Antique Brass	1.345
708	Copper Br. PVD	1.345	845	Dark Bronze	1.345

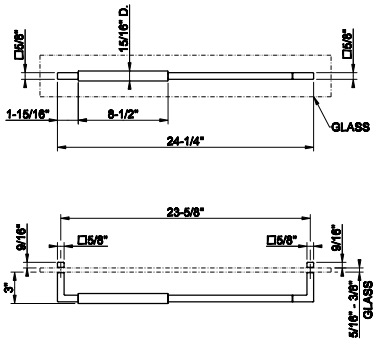

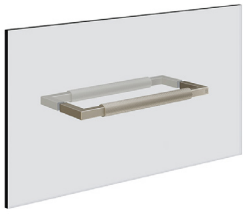

67642

12” Handle and towel rail DIAMANTATO
- For 5/16” to 3/8” (8-10mm) glass
- Towel rail 12-7/16”L x 3”D
- Interior handle 12-7/16”L x2-3/16”D
- 11-13/16” center-to-center
- for Horizontal installation

031	Chrome	1.101	735	Warm Bronze PVD	1.630
149	Finox Br. Nickel	1.487	726	Warm Bronze Br. PVD	1.739
299	Matte Black	1.487	710	Brass PVD	1.630
147	Chrome Br.	1.487	727	Brass Br. PVD	1.739
720	Nickel PVD	1.630	246	Gold PVD	1.850
706	Black Metal PVD	1.630	716	Gold Br. PVD	1.850
707	Black Metal Br. PVD	1.739	187	Aged Bronze	1.739
030	Copper PVD	1.630	713	Antique Brass	1.739
708	Copper Br. PVD	1.739	845	Dark Bronze	1.739

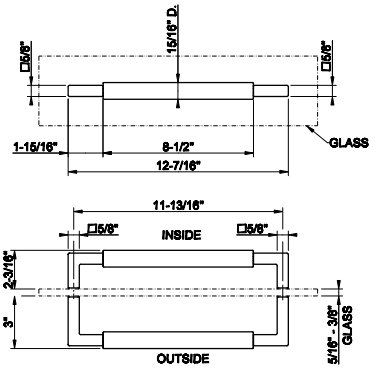

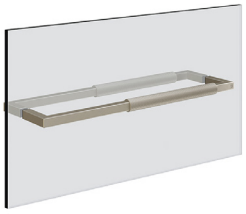

67644

18” Handle and towel rail DIAMANTATO
- For 5/16” to 3/8” (8-10mm) glass
- Towel rail 18-3/8”L x 3”D
- Interior handle 18-3/8”L x 2-3/16”D
- 17-11/16” center-to-center
- For horizontal installation

031	Chrome	1.301	735	Warm Bronze PVD	1.926
149	Finox Br. Nickel	1.758	726	Warm Bronze Br. PVD	2.056
299	Matte Black	1.758	710	Brass PVD	1.926
147	Chrome Br.	1.758	727	Brass Br. PVD	2.056
720	Nickel PVD	1.926	246	Gold PVD	2.185
706	Black Metal PVD	1.926	716	Gold Br. PVD	2.185
707	Black Metal Br. PVD	2.056	187	Aged Bronze	2.056
030	Copper PVD	1.926	713	Antique Brass	2.056
708	Copper Br. PVD	2.056	845	Dark Bronze	2.056

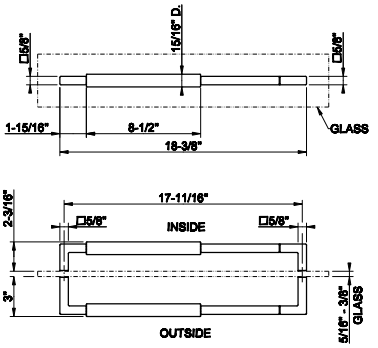

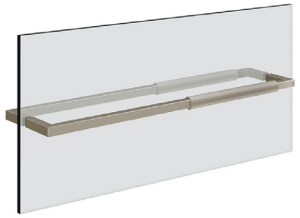

67646

24” Handle and towel rail DIAMANTATO
- For 5/16” to 3/8” (8-10mm) glass
- Towel rail 24-1/4”L x 3”D
- Interior handle 24-1/4”L x 2-3/16”D
- 23-5/8” center-to-center
- For horizontal installation

031	Chrome	1.400	735	Warm Bronze PVD	2.072
149	Finox Br. Nickel	1.890	726	Warm Bronze Br. PVD	2.212
299	Matte Black	1.890	710	Brass PVD	2.072
147	Chrome Br.	1.890	727	Brass Br. PVD	2.212
720	Nickel PVD	2.072	246	Gold PVD	2.352
706	Black Metal PVD	2.072	716	Gold Br. PVD	2.352
707	Black Metal Br. PVD	2.212	187	Aged Bronze	2.212
030	Copper PVD	2.072	713	Antique Brass	2.212
708	Copper Br. PVD	2.212	845	Dark Bronze	2.212

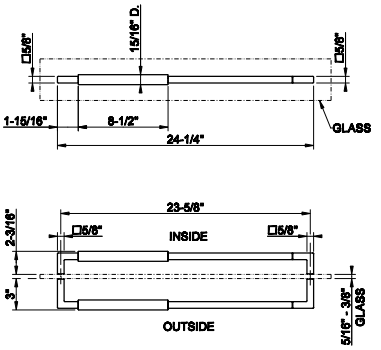



GESSI®

SHOWER G DRAINS

67054

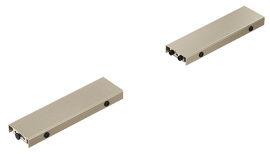

TRIM PARTS ONLY 24” linear drain insert to be combined with cover art. 67066, 67566, or 67666 purchased separately
• Compatible with INFINITY DRAIN FCB 65, FF 65, FCS 65 series linear drain channel (to be purchased separately)
• FCB 6524 SS: For use with Traditional Waterproofing: PVC, Vinyl, Lead, Hot Mop, Copper or Fiberglass
• FC 6524 SS: For use with Liquid/Fabric Waterproofing
• FCS 6524: For use with Schluter®-Kerdi Waterproofing
• 24”L x 2-5/16”W x 1”H

031	Chrome	1.148	708	Copper Br. PVD	1.700
239	Steel Br.	1.148	735	Warm Bronze PVD	1.700
299	Matte Black	1.551	726	Warm Bronze Br. PVD	1.700
720	Nickel PVD	1.700	710	Brass PVD	1.700
706	Black Metal PVD	1.700	727	Brass Br. PVD	1.700
707	Black Metal Br. PVD	1.700	246	Gold PVD	1.929
030	Copper PVD	1.700	716	Gold Br. PVD	1.929

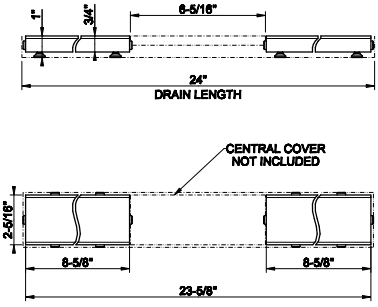

67056

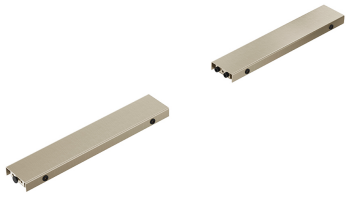

TRIM PARTS ONLY 32” linear drain insert to be combined with cover art. 67066, 67566, or 67666 purchased separately
• Compatible with INFINITY DRAIN FCB 65, FF 65, FCS 65 series linear drain channel (to be purchased separately)
• FCB 6532 SS: For use with Traditional Waterproofing: PVC, Vinyl, Lead, Hot Mop, Copper or Fiberglass
• FC 6532 SS: For use with Liquid/Fabric Waterproofing
• FCS 6532: For use with Schluter®-Kerdi Waterproofing
• 32”L x 2-5/16”W x 1”H

031	Chrome	1.377	708	Copper Br. PVD	2.038
239	Steel Br.	1.377	735	Warm Bronze PVD	2.038
299	Matte Black	1.859	726	Warm Bronze Br. PVD	2.038
720	Nickel PVD	2.038	710	Brass PVD	2.038
706	Black Metal PVD	2.038	727	Brass Br. PVD	2.038
707	Black Metal Br. PVD	2.038	246	Gold PVD	2.313
030	Copper PVD	2.038	716	Gold Br. PVD	2.313

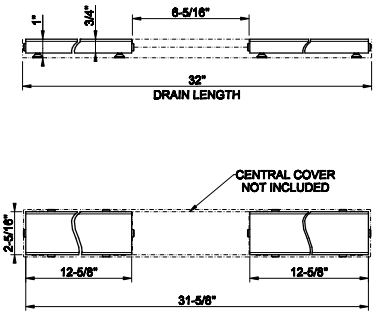

67058

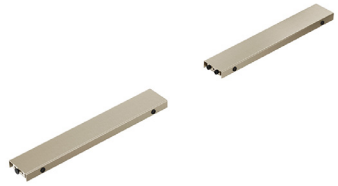

TRIM PARTS ONLY 36” linear drain insert to be combined with cover art. 67066, 67566, or 67666 purchased separately
• Compatible with INFINITY DRAIN FCB 65, FF 65, FCS 65 series linear drain channel (to be purchased separately)
• FCB 6536 SS: For use with Traditional Waterproofing: PVC, Vinyl, Lead, Hot Mop, Copper or Fiberglass
• FC 6536 SS: For use with Liquid/Fabric Waterproofing
• FCS 6536: For use with Schluter®-Kerdi Waterproofing
• 36”L x 2-5/16”W x 1”H

031	Chrome	1.493	708	Copper Br. PVD	2.211
239	Steel Br.	1.493	735	Warm Bronze PVD	2.211
299	Matte Black	2.016	726	Warm Bronze Br. PVD	2.211
720	Nickel PVD	2.211	710	Brass PVD	2.211
706	Black Metal PVD	2.211	727	Brass Br. PVD	2.211
707	Black Metal Br. PVD	2.211	246	Gold PVD	2.509
030	Copper PVD	2.211	716	Gold Br. PVD	2.509

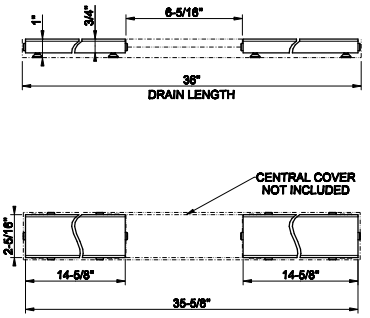

67060



TRIM PARTS ONLY 42” linear drain insert to be combined with cover art. 67066, 67566, or 67666 purchased separately
• Compatible with INFINITY DRAIN FCB 65, FF 65, FCS 65 series linear drain channel (to be purchased separately)
• FCB 6542 SS: For use with Traditional Waterproofing: PVC, Vinyl, Lead, Hot Mop, Copper or Fiberglass
• FC 6542 SS: For use with Liquid/Fabric Waterproofing
• FCS 6542: For use with Schluter®-Kerdi Waterproofing
• 42”L x 2-5/16”W x 1”H

031	Chrome	1.667	708	Copper Br. PVD	2.467
239	Steel Br.	1.667	735	Warm Bronze PVD	2.467
299	Matte Black	2.251	726	Warm Bronze Br. PVD	2.467
720	Nickel PVD	2.467	710	Brass PVD	2.467
706	Black Metal PVD	2.467	727	Brass Br. PVD	2.467
707	Black Metal Br. PVD	2.467	246	Gold PVD	2.801
030	Copper PVD	2.467	716	Gold Br. PVD	2.801

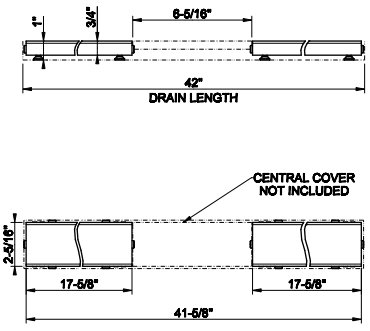

SHOWER G DRAINS

67062

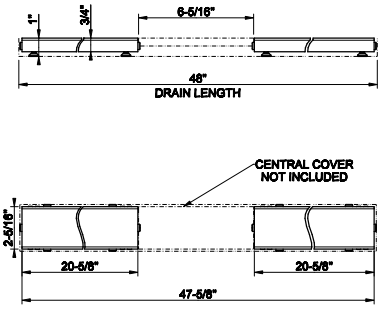

TRIM PARTS ONLY 48" linear drain insert to be combined with cover art. 67066, 67566, or 67666 purchased separately
• Compatible with INFINITY DRAIN FCB 65, FF 65, FCS 65 series linear drain channel (to be purchased separately)
• FCB 6548 SS: For use with Traditional Waterproofing: PVC, Vinyl, Lead, Hot Mop, Copper or Fiberglass
• FC 6548 SS: For use with Liquid/Fabric Waterproofing
• FCS 6548: For use with Schluter®-Kerdi Waterproofing
• 48"L x 2-5/16"W x 1"H



031	Chrome	1.839	708	Copper Br. PVD	2.723
239	Steel Br.	1.839	735	Warm Bronze PVD	2.723
299	Matte Black	2.483	726	Warm Bronze Br. PVD	2.723
720	Nickel PVD	2.723	710	Brass PVD	2.723
706	Black Metal PVD	2.723	727	Brass Br. PVD	2.723
707	Black Metal Br. PVD	2.723	246	Gold PVD	3.091
030	Copper PVD	2.723	716	Gold Br. PVD	3.091

67064

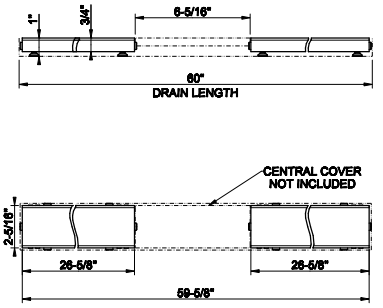

TRIM PARTS ONLY 60" linear drain insert to be combined with cover art. 67066, 67566, or 67666 purchased separately
• Compatible with INFINITY DRAIN FCB 65, FF 65, FCS 65 series linear drain channel (to be purchased separately)
• FCB 6560 SS: For use with Traditional Waterproofing: PVC, Vinyl, Lead, Hot Mop, Copper or Fiberglass
• FC 6560 SS: For use with Liquid/Fabric Waterproofing
• FCS 6560: For use with Schluter®-Kerdi Waterproofing
• 60"L x 2-5/16"W x 1"H



031	Chrome	2.185	708	Copper Br. PVD	3.234
239	Steel Br.	2.185	735	Warm Bronze PVD	3.234
299	Matte Black	2.950	726	Warm Bronze Br. PVD	3.234
720	Nickel PVD	3.234	710	Brass PVD	3.234
706	Black Metal PVD	3.234	727	Brass Br. PVD	3.234
707	Black Metal Br. PVD	3.234	246	Gold PVD	3.671
030	Copper PVD	3.234	716	Gold Br. PVD	3.671

67566

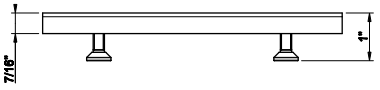

Cover for INFINITY DRAIN RIGATO L 6-5/16"

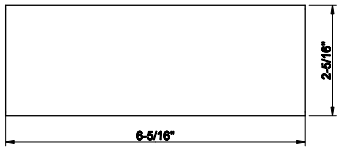



031	Chrome	518	708	Copper Br. PVD	818
149	Finox Br. Nickel	700	735	Warm Bronze PVD	766
299	Matte Black	700	726	Warm Bronze Br. PVD	818
147	Chrome Br.	700	710	Brass PVD	766
720	Nickel PVD	766	727	Brass Br. PVD	818
706	Black Metal PVD	766	246	Gold PVD	870
707	Black Metal Br. PVD	818	716	Gold Br. PVD	870
030	Copper PVD	766			

67666

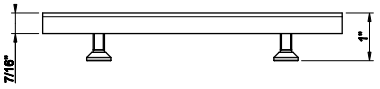

Cover for INFINITY DRAIN DIAMANTATO L 6-5/16"

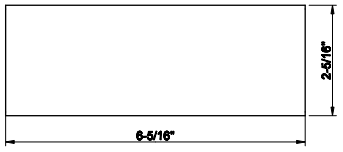



031	Chrome	570	708	Copper Br. PVD	901
149	Finox Br. Nickel	770	735	Warm Bronze PVD	843
299	Matte Black	770	726	Warm Bronze Br. PVD	901
147	Chrome Br.	770	710	Brass PVD	843
720	Nickel PVD	843	727	Brass Br. PVD	901
706	Black Metal PVD	843	246	Gold PVD	957
707	Black Metal Br. PVD	901	716	Gold Br. PVD	957
030	Copper PVD	843			

67066

Cover for INFINITY DRAIN UNITO L 6-5/16”

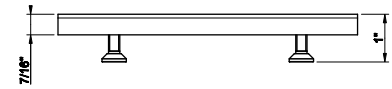



031	Chrome	474	708	Copper Br. PVD	749
149	Finox Br. Nickel	641	735	Warm Bronze PVD	702
299	Matte Black	641	726	Warm Bronze Br. PVD	749
147	Chrome Br.	641	710	Brass PVD	702
720	Nickel PVD	702	727	Brass Br. PVD	749
706	Black Metal PVD	702	246	Gold PVD	797
707	Black Metal Br. PVD	749	716	Gold Br. PVD	797
030	Copper PVD	702			

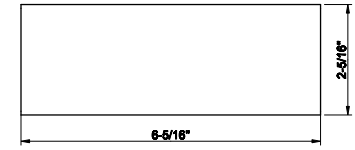


GESSI®
PRIVATE WELLNESS®
OUTDOOR

PRIVATE WELLNESS®

OUTDOOR





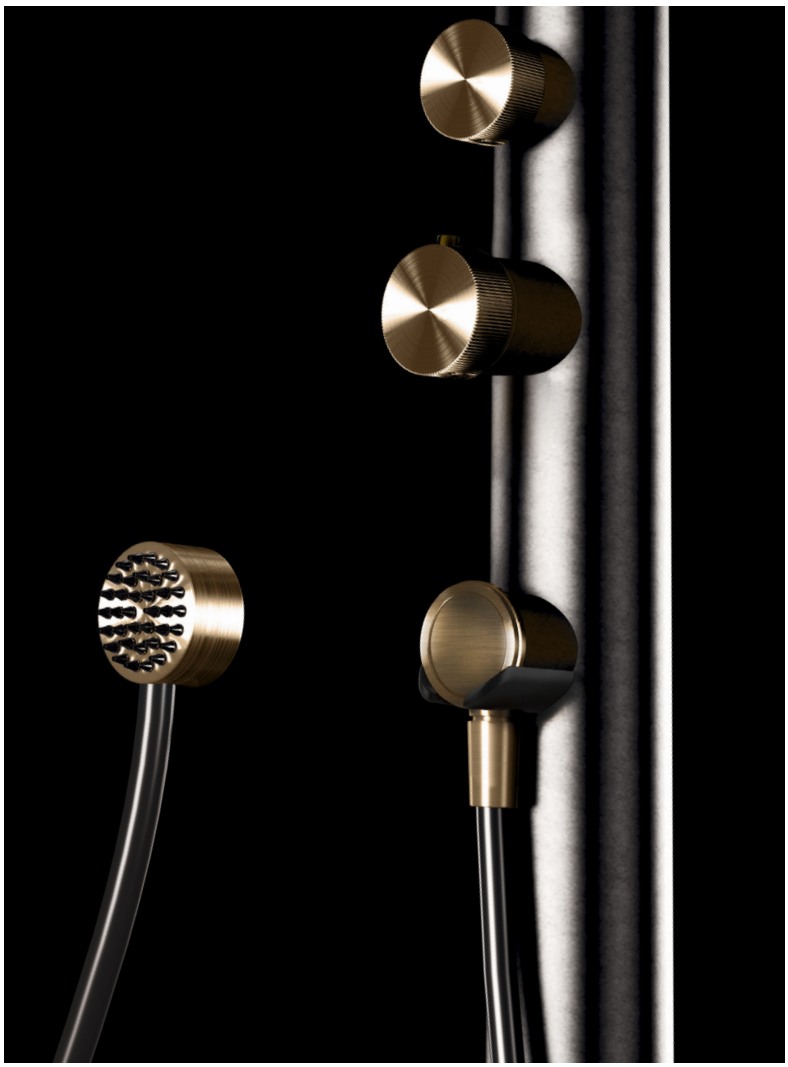




FLESSA


INTRECCIO


MECCANICA


CESELLO


TRAME


RIGATO


DIAMANTATO


FLESSA


INTRECCIO


MECCANICA


CESELLO


TRAME


RIGATO


DIAMANTATO

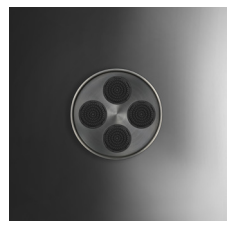
MULTI-SPRAY


RAIN

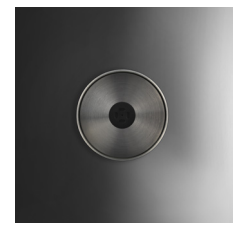
ATOMIZER


WATERFALL

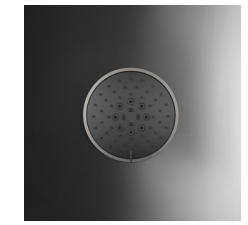
MULTIFUNCTION


#239 #299 #707 #708 #726 #727

PRIVATE WELLNESS®

OUTDOOR G01

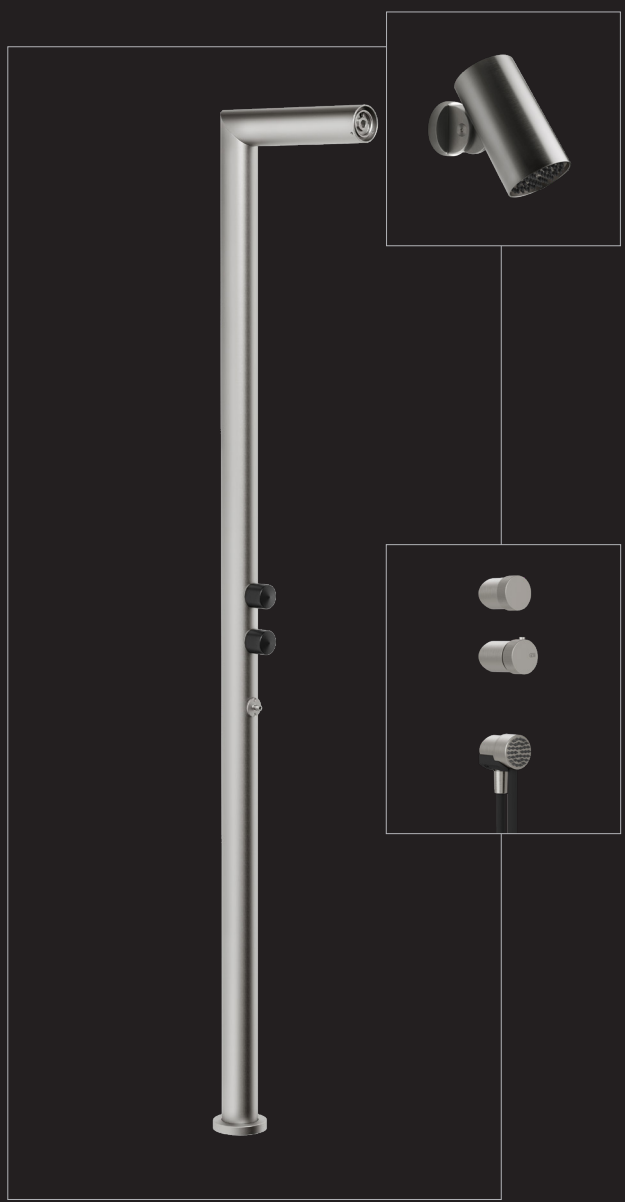

SPOTWATER

MULTISPRAY	RAIN	MULTIFUNCTION
57201 **Flessa**	57203 **Flessa**	57249 **Flessa**
57241 **Trame**	57243 **Trame**	57257 **Trame**
57211 **Intreccio**	57213 **Intreccio**	57251 **Intreccio**
57221 **Meccanica**	57223 **Meccanica**	57223 **Meccanica**
57231 **Cesello**	57233 **Cesello**	57255 **Cesello**
57289 **Rigato**	57277 **Rigato**	57271 **Rigato**
57287 **Diamantato**	57275 **Diamantato**	57273 **Diamantato**

ATOMIZER	WATERFALL
57205 **Flessa**	57207 **Flessa**
57245 **Trame**	57247 **Trame**
57215 **Intreccio**	57217 **Intreccio**
57225 **Meccanica**	57227 **Meccanica**
57235 **Cesello**	57237 **Cesello**
57281 **Rigato**	57285 **Rigato**
57279 **Diamantato**	57283 **Diamantato**

#239 Steel Brushed
#299 Black XL (no Trame)
#726 Warm Bronze Brushed
#707 Black Metal Brushed
#708 Copper Brushed
#727 Brass Brushed

63216

#239 Steel Brushed
#299 Black XL
#726 Warm Bronze Brushed
#707 Black Metal Brushed
#708 Copper Brushed

63215_63204

#239 Steel Brushed
#299 Black XL
#856 Corten

63215+63204

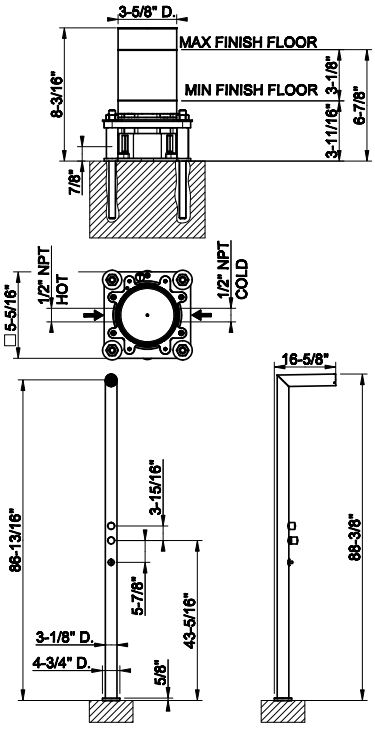

63215

In-floor rough valve for thermosatic shower column



239	Steel Br.	2.066

63204

TRIM PARTS ONLY Two functions thermostatic OUTDOOR shower column
- To be completed with lever/handshower kit 66216, 70216, 63216
- To be completed with SpotWater 316 of the desired finish, texture and function (see SpotWater 316 section)
- Requires in-floorvalve 63215



239	Steel Br.	12.036	856	Corten	16.249
299	Matte Black	16.249			

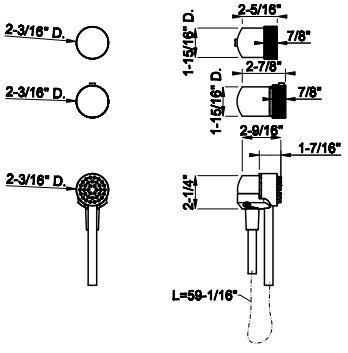

63216

Lever/handshower kit for 63204
- Thermostatic handle
- Handshower max flow rate 1.75 GPM
- 59” flexible hose
- Diverter



239	Steel Br.	2.311	708	Copper Br. PVD	3.651
299	Matte Black	3.119	726	Warm Bronze Br. PVD	3.651
707	Black Metal Br. PVD	3.651	727	Brass Br. PVD	3.651





66216

ORIGINI Lever/Handshower kit for 63204
- Thermostatic handle
- Handshower max flow rate 1.75 GPM
- 59” flexible hose
- Diverter

239	Steel Br.	2.682	708	Copper Br. PVD	3.970
299	Matte Black	3.622	726	Warm Bronze Br. PVD	3.970
707	Black Metal Br. PVD	3.970	727	Brass Br. PVD	3.970

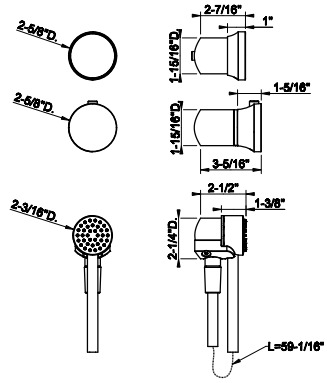





70216

HABITO Lever/handshower kit for 63204
- Thermostatic handle
- Handshower max flow rate 1.75 GPM
- 59” flexible hose
- Diverter

239	Steel Br.	2.392	708	Copper Br. PVD	3.541
299	Matte Black	3.230	726	Warm Bronze Br. PVD	3.541
707	Black Metal Br. PVD	3.541	727	Brass Br. PVD	3.541

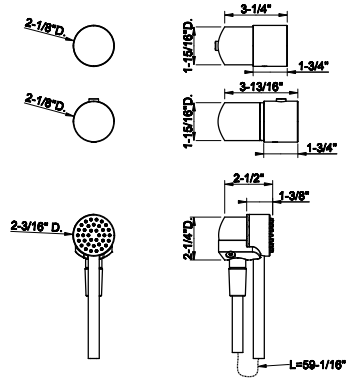



01725

Cover for Outdoor Column 63204

031	Chrome	1.433

GESSI

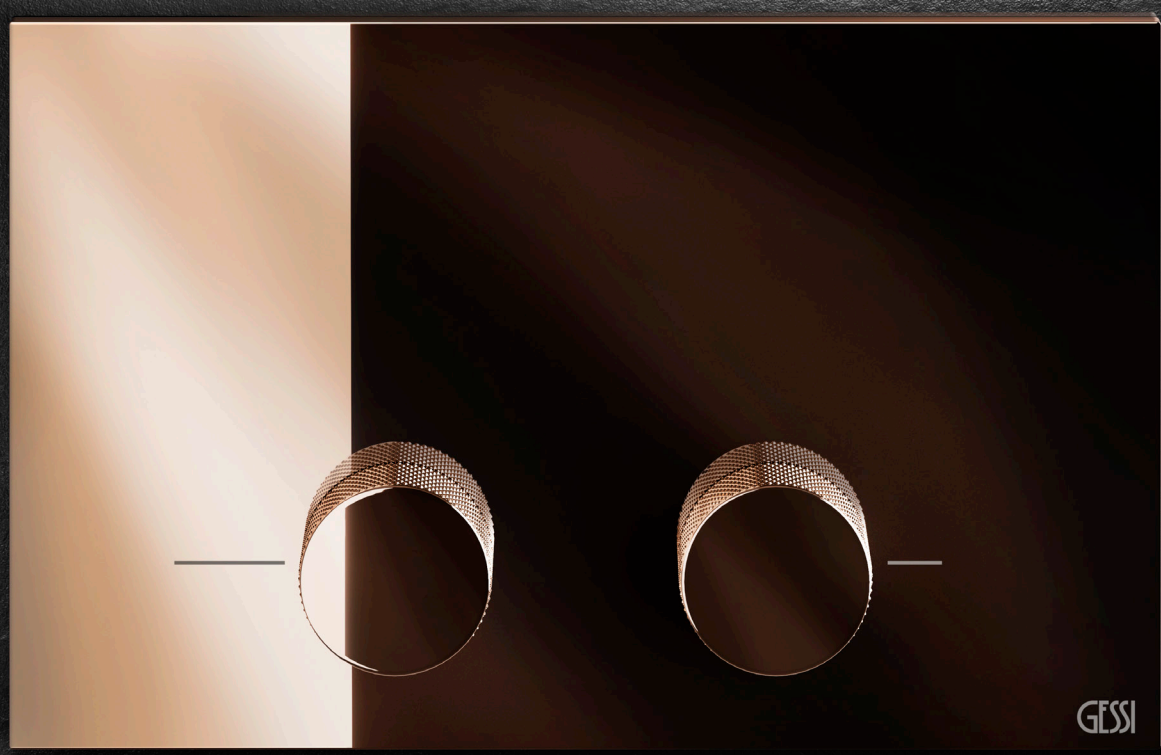

FLUSH ACTUATORS

54611



Flush Actuator Plate
•Stainless steel
•Compatible with GEBERIT models: 111.597.001, 111.902.005, 111.798.00.1, 111.335.00.5
•Without visible fixing system

031	Chrome	1.228	708	Copper Br. PVD	1.813
239	Steel Br.	1.228	735	Warm Bronze PVD	1.813
275	Matte Cipria	1.653	726	Warm Bronze Br. PVD	1.813
273	Matte Greige	1.653	710	Brass PVD	1.813
280	Matte Ocra	1.653	727	Brass Br. PVD	1.813
281	Matte Coral	1.653	246	Gold PVD	2.058
276	Matte Agave	1.653	716	Gold Br. PVD	2.058
299	Matte Black	1.653	187	Aged Bronze	1.813
720	Nickel PVD	1.813	713	Antique Brass	1.813
706	Black Metal PVD	1.813	845	Dark Bronze	1.813
707	Black Metal Br. PVD	1.813	279	Matte White	1.653
030	Copper PVD	1.813			

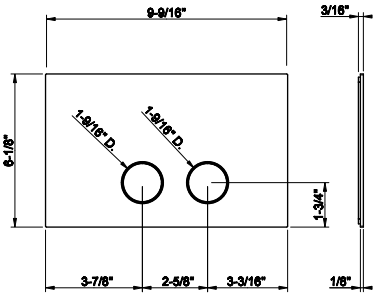

54623



Flush Actuator Plate ANELLO
•Compatible with GEBERIT models: 111.597.001, 111.902.005, 111.798.00.1, 111.335.00.5
•Without visible fixing system
•ADA COMPLIANT

031	Chrome	1.285	708	Copper Br. PVD	2.028
149	Finox Br. Nickel	1.732	735	Warm Bronze PVD	1.903
299	Matte Black	1.820	726	Warm Bronze Br. PVD	2.028
720	Nickel PVD	1.903	710	Brass PVD	1.903
706	Black Metal PVD	1.903	727	Brass Br. PVD	2.028
707	Black Metal Br. PVD	2.028	187	Aged Bronze	2.028
030	Copper PVD	1.903	713	Antique Brass	2.028

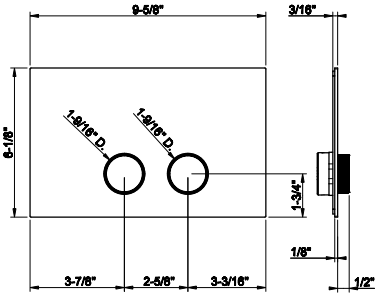

54635



Flush Actuator Plate INGRANAGGIO
•Compatible with GEBERIT models: 111.597.001, 111.902.005, 111.798.00.1, 111.335.00.5
•Withoutvisible fixing system
•ADA COMPLIANT

031	Chrome	1.285	708	Copper Br. PVD	2.028
149	Finox Br. Nickel	1.732	735	Warm Bronze PVD	1.903
299	Matte Black	1.732	726	Warm Bronze Br. PVD	2.028
720	Nickel PVD	1.903	710	Brass PVD	1.903
706	Black Metal PVD	1.903	727	Brass Br. PVD	2.028
707	Black Metal Br. PVD	2.028	187	Aged Bronze	2.028
030	Copper PVD	1.903	713	Antique Brass	2.028

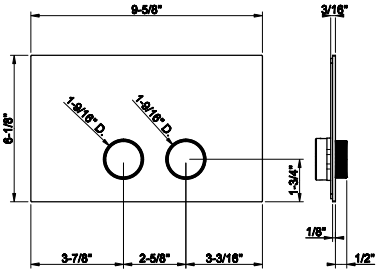

54651



Flush Actuator Plate VENTI20
•Compatible with GEBERIT models: 111.597.001, 111.902.005, 111.798.00.1, 111.335.00.5
•Without visible fixingsystem
•ADA COMPLIANT

031	Chrome	1.590	735	Warm Bronze PVD	2.352
149	Finox Br. Nickel	2.145	726	Warm Bronze Br. PVD	2.510
299	Matte Black	2.145	710	Brass PVD	2.352
720	Nickel PVD	2.352	727	Brass Br. PVD	2.510
706	Black Metal PVD	2.352	246	Gold PVD	2.670
707	Black Metal Br. PVD	2.510	716	Gold Br. PVD	2.670
030	Copper PVD	2.352	187	Aged Bronze	2.510
708	Copper Br. PVD	2.510	713	Antique Brass	2.510

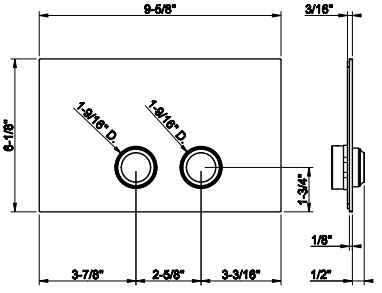

FLUSH PLATES

54671

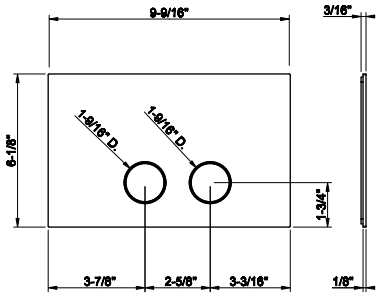

Flush Actuator Plate RIGATO
•Stainless steel
•Compatible with GEBERIT models: 111.597.001, 111.902.005, 111.798.00.1, 111.335.00.5
•Without visible fixing system

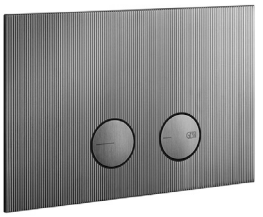

031	Chrome	2.585	708	Copper Br. PVD	4.082
149	Finox Br. Nickel	3.490	735	Warm Bronze PVD	3.824
299	Matte Black	3.490	726	Warm Bronze Br. PVD	4.082
720	Nickel PVD	3.824	710	Brass PVD	3.824
706	Black Metal PVD	3.824	727	Brass Br. PVD	4.082
707	Black Metal Br. PVD	4.082	187	Aged Bronze	4.082
030	Copper PVD	3.824	713	Antique Brass	4.082

54681

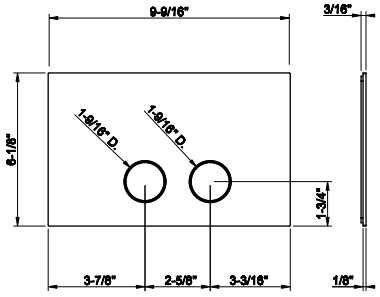

Flush Actuator Plate DIAMANTATO
•Stainless steel
•Compatible with GEBERIT models: 111.597.001, 111.902.005, 111.798.00.1, 111.335.00.5
•Without visible fixing system

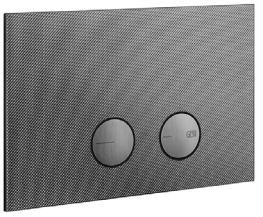

031	Chrome	2.585	708	Copper Br. PVD	4.082
149	Finox Br. Nickel	3.490	735	Warm Bronze PVD	3.824
299	Matte Black	3.490	726	Warm Bronze Br. PVD	4.082
720	Nickel PVD	3.824	710	Brass PVD	3.824
706	Black Metal PVD	3.824	727	Brass Br. PVD	4.082
707	Black Metal Br. PVD	4.082	187	Aged Bronze	4.082
030	Copper PVD	3.824	713	Antique Brass	4.082


GESSI
TOTAL
LOOK

66601

Countertop washbasin in Cristalplant®, without overflow drain. Basin waste 01313 not included



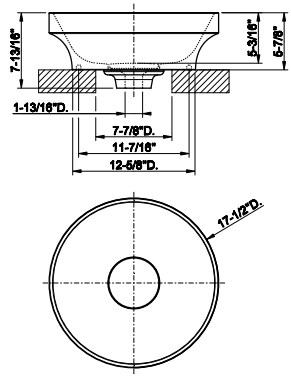

521	Cristalplant Matt White	3.094	508	Cristalplant Matt Agave	4.698
511	Cristalplant Matt Black	4.698	507	Cristalplant Matt Cipria	4.698
510	Cristalplant Matt Coral	4.698	506	Cristalplant Matt Greige	4.698
509	Cristalplant Matt Ocra	4.698			

54601

Counter washbasin In stainless steel, without overflow waste. Without basin waste. It can be combined with waste 54597.



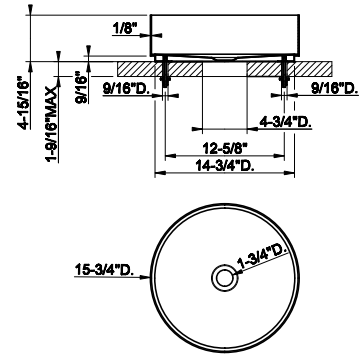

239	Steel Br.	2.449	708	Copper Br. PVD	6.986
299	Matte Black	4.431	726	Warm Bronze Br. PVD	6.986
707	Black Metal Br. PVD	6.986	727	Brass Br. PVD	6.986

65601

Counter washbasin in stailess steel RIGATO, without overflow waste. It can be combined with waste 54597.



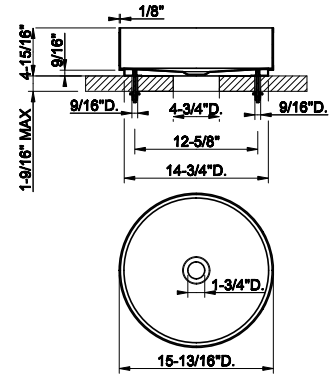

239	Steel Br.	5.760	726	Warm Bronze Br. PVD	10.549
707	Black Metal Br. PVD	10.549	727	Brass Br. PVD	10.549
708	Copper Br. PVD	10.549			

01578

Undermounted washbasin brackets for 54601, 54605, 54606.

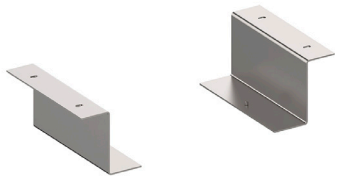

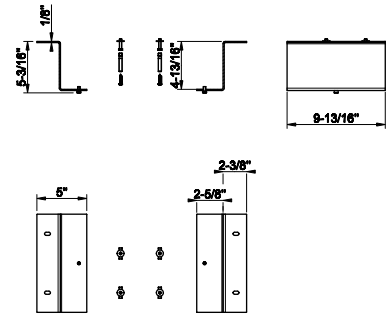

031	Chrome	428

39123

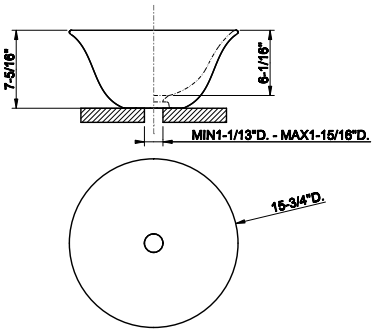

Counter washbasin in White Gres without overflow waste
- 7-5/16" HIGH X 15-3/4" DIAMETER
- Drain sold separately - see 29048
- Please contact Gessi North America for freight terms



519	Gres	1.071

39124

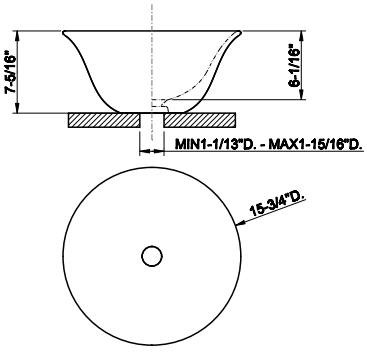

Counter washbasin in White Gres without overflow waste
- 7-5/16" HIGH X 15-3/4" DIAMETER
- Drain sold separately - see 29048
- Please contact Gessi North America for freight terms



519	Gres	1.071

39125

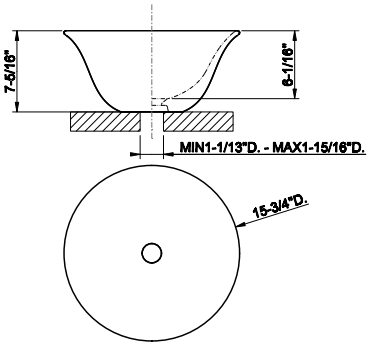

Counter washbasin in White Gres without overflow waste
- 7-5/16" HIGH X 15-3/4" DIAMETER
- Drain sold separately - see 29048
- Please contact Gessi North America for freight terms



519	Gres	2.271

39133

Counter washbasin in White Gres without overflow waste
- 11-13/16” HIGH X 19-11/16” DIAMETER
- Drain sold separately - see 29048
- Please contact Gessi North America for freight terms

519 Gres 1.162

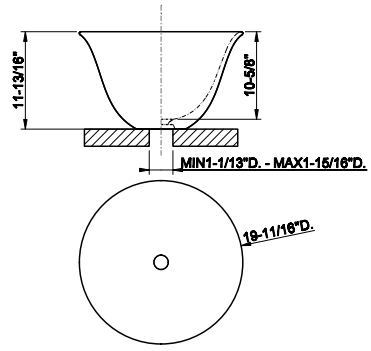



39134

Counter washbasin in White Gres without overflow waste
- 11-13/16” HIGH X 19-11/16” DIAMETER
- Drain sold separately - see 29048
- Please contact Gessi North America for freight terms

519 Gres 1.162

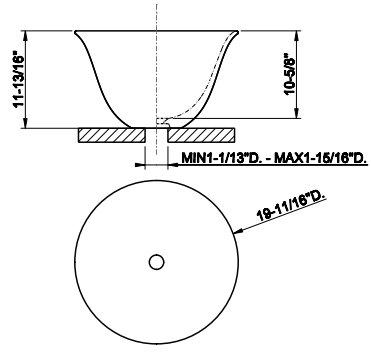



39135

Counter washbasin in White Gres without overflow waste
- 11-13/16” HIGH X 19-11/16” DIAMETER
- Drain sold separately - see 29048
- Please contact Gessi North America for freight terms

519 Gres 2.542

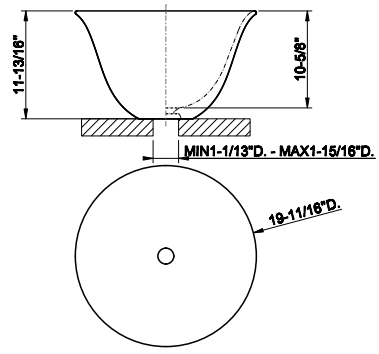

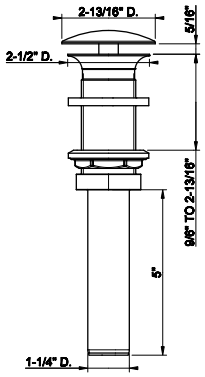

01315

1 1/4" pish drain with or without overflow waste



031	Chrome	345	735	Warm Bronze PVD	546
149	Finox Br. Nickel	466	726	Warm Bronze Br. PVD	580
299	Matte Black	466	710	Brass PVD	546
147	Chrome Br.	466	727	Brass Br. PVD	580
720	Nickel PVD	546	246	Gold PVD	615
706	Black Metal PVD	546	716	Gold Br. PVD	615
707	Black Metal Br. PVD	580	187	Aged Bronze	580
030	Copper PVD	546	713	Antique Brass	580
708	Copper Br. PVD	580	279	Matte White	466

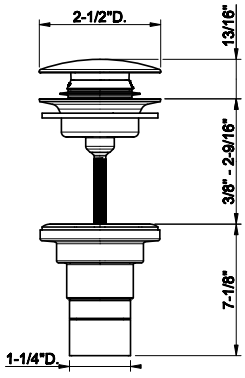

54597

1 1/4" push drain with or without overflow feature
- Recommended for Gessi 316 Collection



239	Steel Br.	212	708	Copper Br. PVD	313
299	Matte Black	287	726	Warm Bronze Br. PVD	313
707	Black Metal Br. PVD	313	727	Brass Br. PVD	313

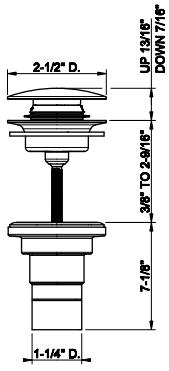

01427

1 1/4" push drain with or without overflow feature



031	Chrome	134	030	Copper PVD	379
239	Steel Br.	134	708	Copper Br. PVD	379
275	Matte Cipria	326	735	Warm Bronze PVD	379
273	Matte Greige	326	726	Warm Bronze Br. PVD	379
277	Glossy Ocra	326	710	Brass PVD	379
278	Glossy Coral	326	727	Brass Br. PVD	379
276	Matte Agave	326	246	Gold PVD	405
299	Matte Black	386	716	Gold Br. PVD	405
720	Nickel PVD	379	187	Aged Bronze	379
706	Black Metal PVD	379	713	Antique Brass	379
707	Black Metal Br. PVD	379	845	Dark Bronze	379

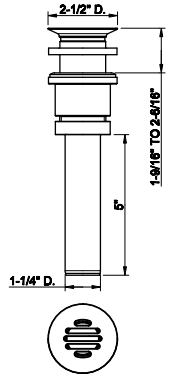

01314

Grille free-flow waste



031	Chrome	289


GESSI
SENSOR
TAPS

58023



Electronic basin mixer with temperature and water flow rate adjustment through under-basin control
- 1/2” connections
- Spout projection 6-1/2”
- Height 9-1/2”
- Drain not included - See DRAINS section
- Max flow rate 1.2 GPM - 0.2 GPC
- 10 sec flow cycle
- Sensor imbedded in the spout
- ADA compliant

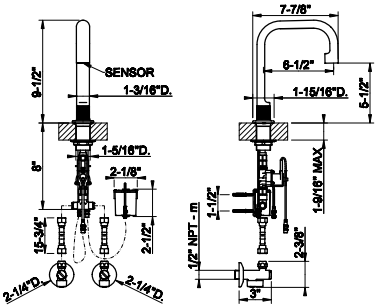

031	Chrome	3.041	726	Warm Bronze Br. PVD	4.803
149	Finox Br. Nickel	4.105	710	Brass PVD	4.499
299	Matte Black	4.105	727	Brass Br. PVD	4.803
720	Nickel PVD	4.499	246	Gold PVD	5.106
706	Black Metal PVD	4.499	716	Gold Br. PVD	5.106
707	Black Metal Br. PVD	4.803	187	Aged Bronze	4.803
030	Copper PVD	4.499	713	Antique Brass	4.803
708	Copper Br. PVD	4.803	845	Dark Bronze	4.803
735	Warm Bronze PVD	4.499			

44665

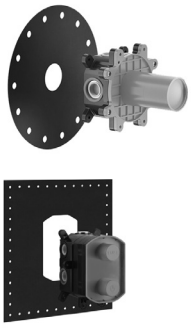

In-wall rough valve for wall-mounted electronic mixer.
- 1/2”connections

031	Chrome	1.452

44665+58105

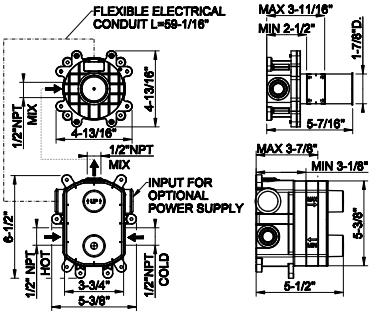

58105



TRIM PARTS ONLY Wall-mounted electronic mixer.
- 1/2” connections
- Spout projection 8-1/2”
- Drain not included - See DRAINS section
- Max flow rate 1.2 GPM - 0.2 GPC
- Requires in-wall rough valve 44665
- 10 sec flow cycle
- Sensor imbedded in the spout
- ADA compliant

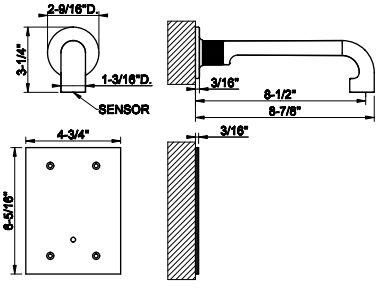

031	Chrome	2.954	735	Warm Bronze PVD	4.373
149	Finox Br. Nickel	3.988	726	Warm Bronze Br. PVD	4.666
299	Matte Black	3.988	710	Brass PVD	4.373
720	Nickel PVD	4.373	727	Brass Br. PVD	4.666
706	Black Metal PVD	4.373	246	Gold PVD	4.962
707	Black Metal Br. PVD	4.666	716	Gold Br. PVD	4.962
030	Copper PVD	4.373	187	Aged Bronze	4.666
708	Copper Br. PVD	4.666	713	Antique Brass	4.666

44665+58107

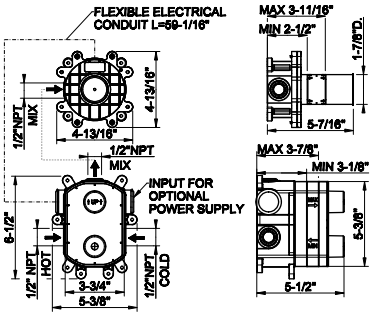

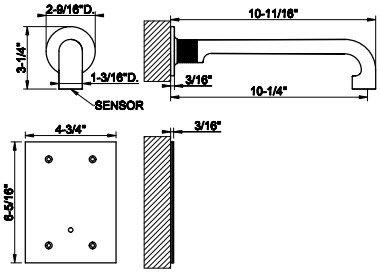

44665

In-wall rough valve for wall-mounted electronic mixer.
- 1/2"connections

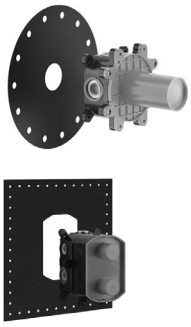

031	Chrome	1.452

58107

TRIM PARTS ONLY Wall-mounted electronic mixer.
- 1/2" connections
- Spout projection 10-1/4"
- Drain not included - See DRAINS section
- Max flow rate 1.2 GPM - 0.2 GPC
- Requires in-wall rough valve 44665
- 10 sec flow cycle
- Sensor imbedded in the spout
- ADA compliant



031	Chrome	2.954	735	Warm Bronze PVD	4.373
149	Finox Br. Nickel	3.988	726	Warm Bronze Br. PVD	4.666
299	Matte Black	3.988	710	Brass PVD	4.373
720	Nickel PVD	4.373	727	Brass Br. PVD	4.666
706	Black Metal PVD	4.373	246	Gold PVD	4.962
707	Black Metal Br. PVD	4.666	716	Gold Br. PVD	4.962
030	Copper PVD	4.373	187	Aged Bronze	4.666
708	Copper Br. PVD	4.666	713	Antique Brass	4.666

44679+58019

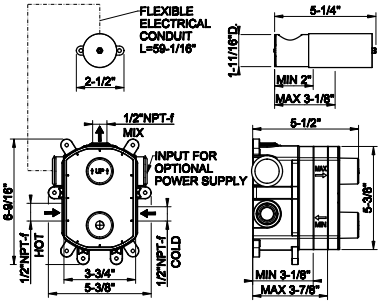

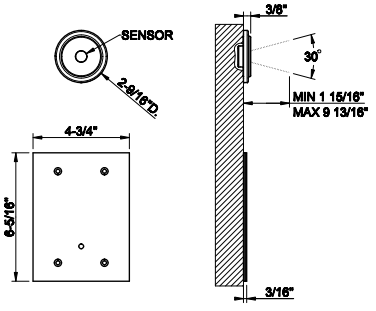

44679

In-wall rough valve for wall-mounted electronic separate control.
- 1/2"connections

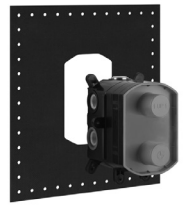

031	Chrome	1.053

58019

TRIM PARTS ONLY Wall-mounted electronic separate control with temperature and flow rate setting box
- 1/2 connections
- Requiresin-wall rough valve 44679
- ADA compliant
- 10 sec flow cycle



031	Chrome	1.778	735	Warm Bronze PVD	2.632
149	Finox Br. Nickel	2.401	726	Warm Bronze Br. PVD	2.809
299	Matte Black	2.401	710	Brass PVD	2.632
720	Nickel PVD	2.632	727	Brass Br. PVD	2.809
706	Black Metal PVD	2.632	246	Gold PVD	2.987
707	Black Metal Br. PVD	2.809	716	Gold Br. PVD	2.987
030	Copper PVD	2.632	187	Aged Bronze	2.809
708	Copper Br. PVD	2.809	713	Antique Brass	2.809

54081



Electronic basin mixer with temperature and water flow rate adjustment through under-basin control. FLESSA
- 1/2” connections
- Spout projection 6-1/16”
- Height 8-5/16”
- Drain not included - See DRAINS section
- Max flow rate 1.2 GPM - 0.2 GPC
- 10 sec flow cycle
- Sensor imbedded in the spout
- ADA compliant

239	Steel Br.	3.041	708	Copper Br. PVD	4.499
299	Matte Black	4.105	726	Warm Bronze Br. PVD	4.499
707	Black Metal Br. PVD	4.499	727	Brass Br. PVD	4.499

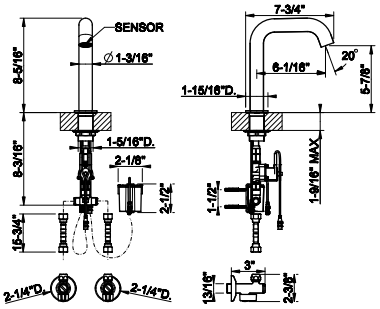

54080



Electronic basin mixer with temperature and water flow rate adjustment through under-basin control. FLESSA
- 1/2” connections
- Spout projection 6-1/16”
- Height 11-1/2”
- Drain not included - See DRAINS section
- Max flow rate 1.2 GPM - 0.2 GPC
- 10 sec flow cycle
- Sensor imbedded in the spout
- ADA compliant

239	Steel Br.	3.097	708	Copper Br. PVD	4.584
299	Matte Black	4.182	726	Warm Bronze Br. PVD	4.584
707	Black Metal Br. PVD	4.584	727	Brass Br. PVD	4.584

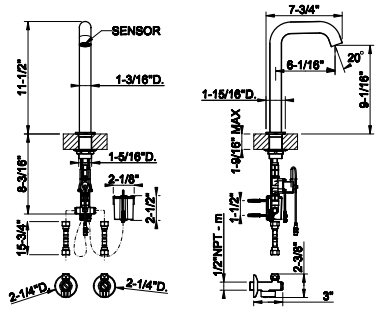

54381



Electronic basin mixer with temperature and water flow rate adjustment through under-basin control. TRAME
- 1/2” connections
- Spout projection 6-1/16”
- Height 8-15/16”
- Drain not included - See DRAINS section
- Max flow rate 1.2 GPM - 0.2 GPC
- 10 sec flow cycle
- Sensor imbedded in the spout
- ADA compliant

239	Steel Br.	3.352	726	Warm Bronze Br. PVD	4.960
707	Black Metal Br. PVD	4.960	727	Brass Br. PVD	4.960
708	Copper Br. PVD	4.960			

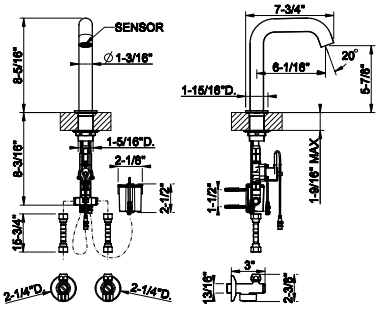

54380



Electronic basin mixer with temperature and water flow rate adjustment through under-basin control. TRAME
- 1/2” connections
- Spout projection 6-1/16”
- Height 11-1/2”
- Drain not included - See DRAINS section
- Max flow rate 1.2 GPM - 0.2 GPC
- 10 sec flow cycle
- Sensor imbedded in the spout
- ADA compliant

239	Steel Br.	3.181	726	Warm Bronze Br. PVD	4.709
707	Black Metal Br. PVD	4.709	727	Brass Br. PVD	4.709
708	Copper Br. PVD	4.709			

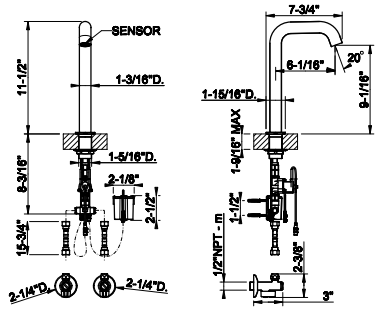

SENSOR TAPS

54181

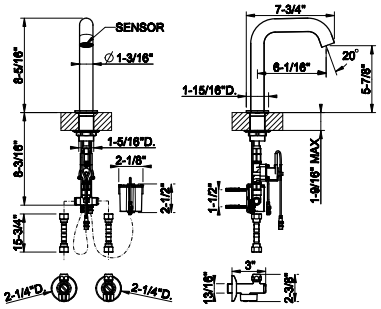

Electronic basin mixer with temperature and water flow rate adjustment through under-basin control. INTRECCIO
- 1/2" connections
- Spout projection 6-1/16"
- Height 8-5/16"
- Drain not included - See DRAINS section
- Max flow rate 1.2 GPM - 0.2 GPC
- 10 sec flowcycle
- Sensor imbedded in the spout
- ADA compliant



239	Steel Br.	3.352	708	Copper Br. PVD	4.960
299	Matte Black	4.525	726	Warm Bronze Br. PVD	4.960
707	Black Metal Br. PVD	4.960	727	Brass Br. PVD	4.960

54180

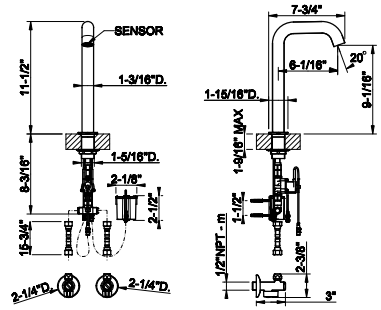

Electronic basin mixer with temperature and water flow rate adjustment through under-basin control. INTRECCIO
- 1/2" connections
- Spout projection 6-1/16"
- Height 11-1/2"
- Drain not included - See DRAINS section
- Max flow rate 1.2 GPM - 0.2 GPC
- 10 sec flowcycle
- Sensor imbedded in the spout
- ADA compliant



239	Steel Br.	3.404	708	Copper Br. PVD	5.040
299	Matte Black	4.597	726	Warm Bronze Br. PVD	5.040
707	Black Metal Br. PVD	5.040	727	Brass Br. PVD	5.040

54281

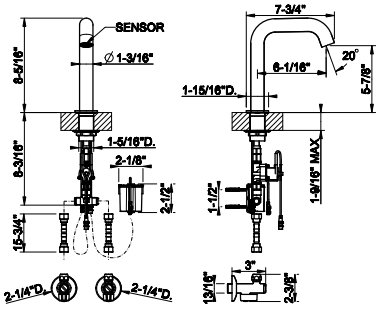

Electronic basin mixer with temperature and water flow rate adjustment through under-basin control. MECCANICA
- 1/2" connections
- Spout projection 6-1/16"
- Height 8-5/16"
- Drain not included - See DRAINS section
- Max flow rate 1.2 GPM - 0.2 GPC
- 10 sec flowcycle
- Sensor imbedded in the spout
- ADA compliant



239	Steel Br.	3.352	708	Copper Br. PVD	4.960
299	Matte Black	4.525	726	Warm Bronze Br. PVD	4.960
707	Black Metal Br. PVD	4.960	727	Brass Br. PVD	4.960

54280

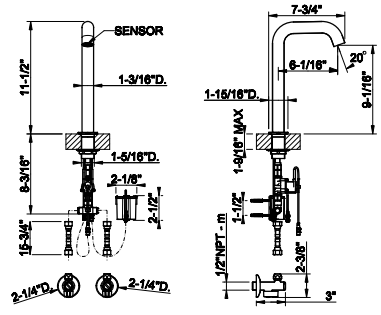

Electronic basin mixer with temperature and water flow rate adjustment through under-basin control. MECCANICA
- 1/2" connections
- Spout projection 6-1/16"
- Height 11-1/2"
- Drain not included - See DRAINS section
- Max flow rate 1.2 GPM - 0.2 GPC
- 10 sec flowcycle
- Sensor imbedded in the spout
- ADA compliant



239	Steel Br.	3.404	708	Copper Br. PVD	5.040
299	Matte Black	4.597	726	Warm Bronze Br. PVD	5.040
707	Black Metal Br. PVD	5.040	727	Brass Br. PVD	5.040

54481



Electronic basin mixer with temperature and water flow rate adjustment through under-basin control. CESELLO
- 1/2” connections
- Spout projection 6-1/16”
- Height 8-5/16”
- Drain not included - See DRAINS section
- Max flow rate 1.2 GPM - 0.2 GPC
- 10 sec flowcycle
- Sensor imbedded in the spout
- ADA compliant

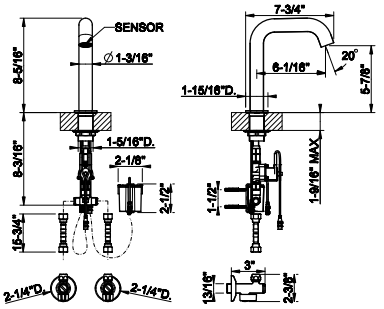

239	Steel Br.	3.352	708	Copper Br. PVD	4.960
299	Matte Black	4.525	726	Warm Bronze Br. PVD	4.960
707	Black Metal Br. PVD	4.960	727	Brass Br. PVD	4.960

54480



Electronic basin mixer with temperature and water flow rate adjustment through under-basin control. CESELLO
- 1/2” connections
- Spout projection 6-1/16”
- Height 11-1/2”
- Drain not included - See DRAINS section
- Max flow rate 1.2 GPM - 0.2 GPC
- 10 sec flowcycle
- Sensor imbedded in the spout
- ADA compliant

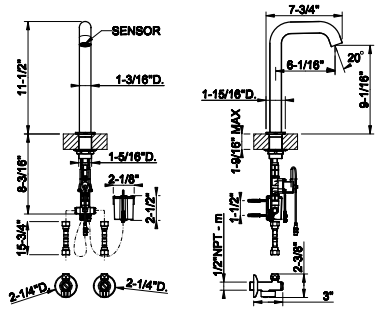

239	Steel Br.	3.181	708	Copper Br. PVD	4.709
299	Matte Black	4.295	726	Warm Bronze Br. PVD	4.709
707	Black Metal Br. PVD	4.709	727	Brass Br. PVD	4.709

44665

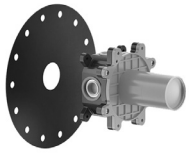

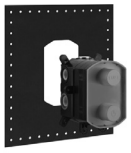

In-wall rough valve for wall-mounted electronic mixer.
- 1/2”connections

031	Chrome	1.452			

44665+54014

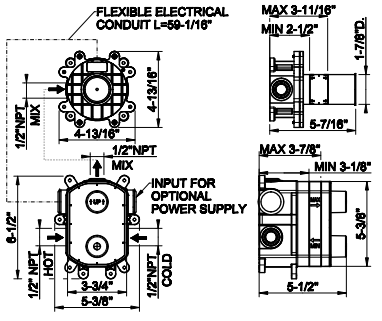

54014



TRIM PARTS ONLY Wall-mounted electronic mixer. FLESSA.
- Spout projection 5-3/4”
- 1/2” connections
- Max flow rate 1.2 GPM - 0.2 GPC
- Drain not included - See DRAINS section
- Requires in-wall rough valve 44665
- 10 sec flow cycle
- Sensor imbedded in the spout
- ADA compliant

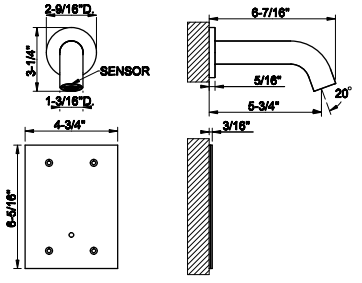

239	Steel Br.	2.954	708	Copper Br. PVD	4.373
299	Matte Black	3.988	726	Warm Bronze Br. PVD	4.373
707	Black Metal Br. PVD	4.373	727	Brass Br. PVD	4.373

44665+54015

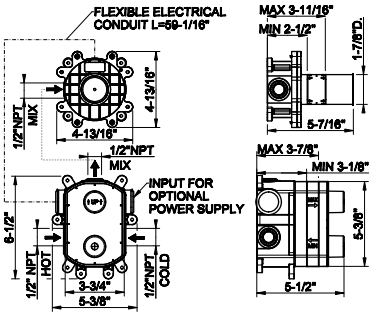

44665

In-wall rough valve for wall-mounted electronic mixer.
- 1/2"connections

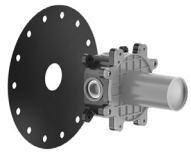



031	Chrome	1.452

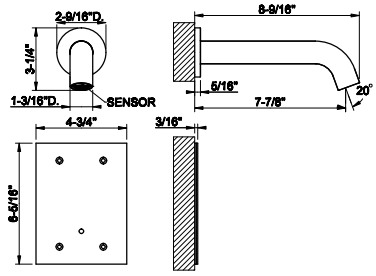

54015

TRIM PARTS ONLY Wall-mounted electronic mixer. FLESSA.
- Spout projection 7-7/8"
- 1/2" connections
- Max flow rate 1.2 GPM - 0.2 GPC
- Drain not included - See DRAINS section
- Requires in-wall rough valve 44665
- 10 sec flow cycle
- Sensor imbedded in the spout
- ADA compliant





239	Steel Br.	3.181	708	Copper Br. PVD	4.709
299	Matte Black	4.295	726	Warm Bronze Br. PVD	4.709
707	Black Metal Br. PVD	4.709	727	Brass Br. PVD	4.709

44665+54314

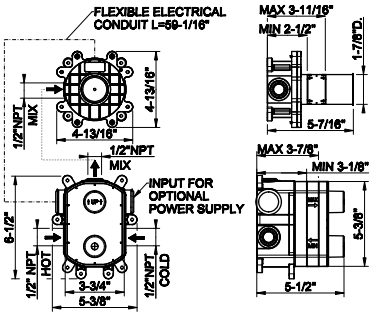

44665

In-wall rough valve for wall-mounted electronic mixer.
- 1/2"connections

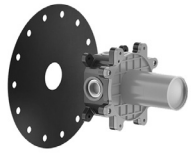



031	Chrome	1.452

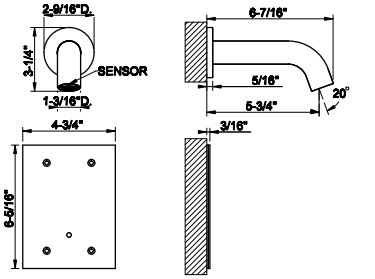

54314

TRIM PARTS ONLY Wall-mounted electronic mixer. TRAME.
- Spout projection 5-3/4"
- 1/2" connections
- Max flow rate 1.2 GPM - 0.2 GPC
- Drain not included - See DRAINS section
- Requires in-wall rough valve 44665
- 10 sec flow cycle
- Sensor imbedded in the spout
- ADA compliant





239	Steel Br.	3.256	726	Warm Bronze Br. PVD	4.819
707	Black Metal Br. PVD	4.819	727	Brass Br. PVD	4.819
708	Copper Br. PVD	4.819			

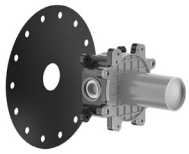

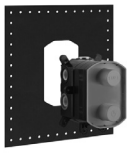

44665

In-wall rough valve for wall-mounted electronic mixer.
• 1/2”connections

031	Chrome	1.452

44665+54315

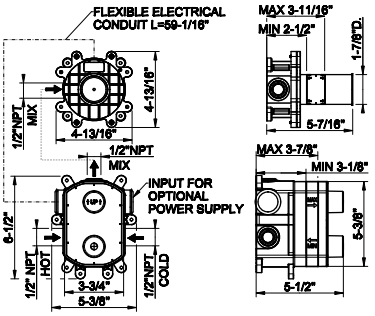



54315

TRIM PARTS ONLY Wall-mounted electronic mixer. TRAME.
• Spout projection 7-7/8”
• 1/2” connections
• Max flow rate 1.2 GPM - 0.2 GPC
• Drain not included - See DRAINS section
• Requires in-wall rough valve 44665
• 10 sec flow cycle
• Sensor imbedded in the spout
• ADA compliant

239	Steel Br.	3.487	726	Warm Bronze Br. PVD	5.162
707	Black Metal Br. PVD	5.162	727	Brass Br. PVD	5.162
708	Copper Br. PVD	5.162			

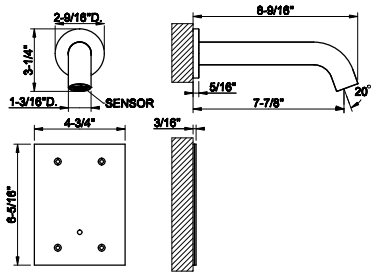

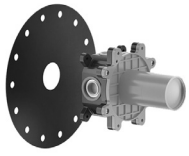

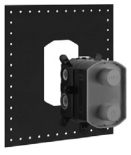

44665

In-wall rough valve for wall-mounted electronic mixer.
• 1/2”connections

031	Chrome	1.452

44665+54114

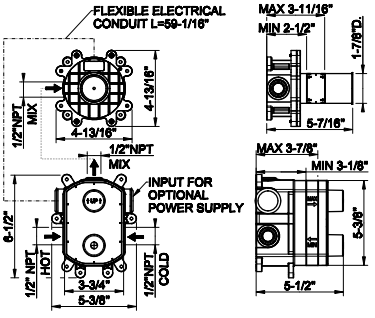



54114

TRIM PARTS ONLY Wall-mounted electronic mixer. INTRECCIO.
• Spout projection 5-3/4”
• 1/2” connections
• Max flow rate 1.2 GPM - 0.2 GPC
• Drain not included - See DRAINS section
• Requires in-wall rough valve 44665
• 10 sec flow cycle
• Sensor imbedded in the spout
• ADA compliant

239	Steel Br.	3.256	708	Copper Br. PVD	4.819
299	Matte Black	4.397	726	Warm Bronze Br. PVD	4.819
707	Black Metal Br. PVD	4.819	727	Brass Br. PVD	4.819

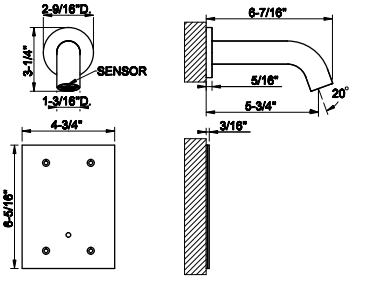

SENSOR TAPS

44665+54115

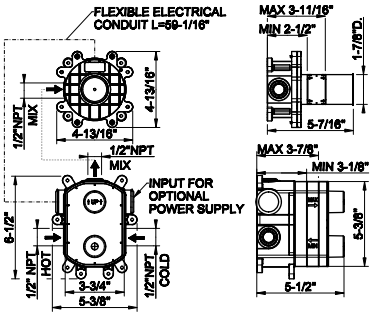

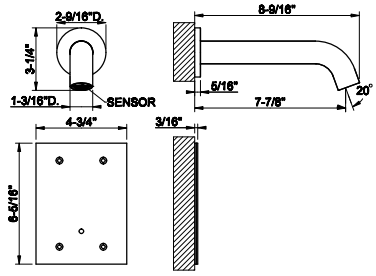

44665

In-wall rough valve for wall-mounted electronic mixer.
- 1/2"connections

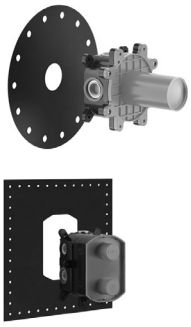

031	Chrome	1.452

54115

TRIM PARTS ONLY Wall-mounted electronic mixer. INTRECCIO.
- Spout projection 7-7/8"
- 1/2" connections
- Max flow rate 1.2 GPM - 0.2 GPC
- Drain not included - See DRAINS section
- Requires in-wall rough valve 44665
- 10 sec flow cycle
- Sensor imbedded in the spout
- ADA compliant



239	Steel Br.	3.522	708	Copper Br. PVD	5.211
299	Matte Black	4.753	726	Warm Bronze Br. PVD	5.211
707	Black Metal Br. PVD	5.211	727	Brass Br. PVD	5.211

44665+54214

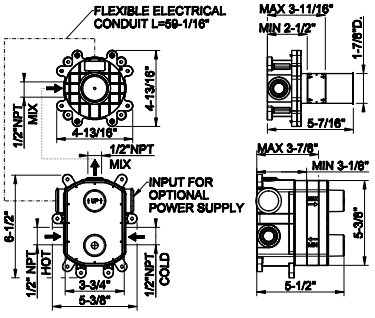

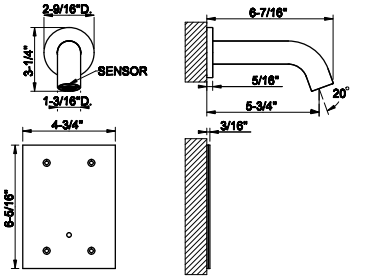

44665

In-wall rough valve for wall-mounted electronic mixer.
- 1/2"connections

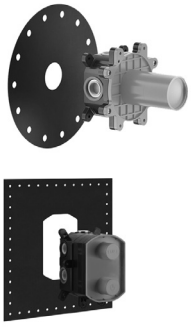

031	Chrome	1.452

54214

TRIM PARTS ONLY Wall-mounted electronic mixer.
MECCANICA.
- Spout projection 5-3/4"
- 1/2" connections
- Max flow rate 1.2 GPM - 0.2 GPC
- Drain not included - See DRAINS section
- Requires in-wall rough valve 44665
- 10 sec flow cycle
- Sensor imbedded in the spout
- ADA compliant



239	Steel Br.	3.256	708	Copper Br. PVD	4.819
299	Matte Black	4.397	726	Warm Bronze Br. PVD	4.819
707	Black Metal Br. PVD	4.819	727	Brass Br. PVD	4.819

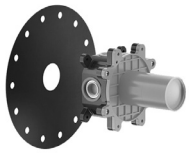

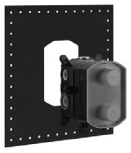

44665

In-wall rough valve for wall-mounted electronic mixer.
• 1/2”connections

031	Chrome	1.452

44655+54215

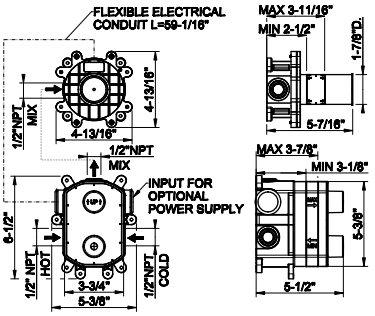





54215

TRIM PARTS ONLY Wall-mounted electronic mixer. MECCANICA.
• Spout projection 7-7/8”
• 1/2” connections
• Max flow rate 1.2 GPM - 0.2 GPC
• Drain not included - See DRAINS section
• Requires in-wall rough valve 44665
• 10 sec flow cycle
• Sensor imbedded in the spout
• ADA compliant

239	Steel Br.	3.487	708	Copper Br. PVD	5.162
299	Matte Black	4.707	726	Warm Bronze Br. PVD	5.162
707	Black Metal Br. PVD	5.162	727	Brass Br. PVD	5.162

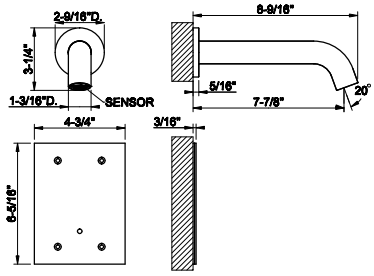

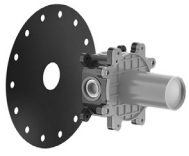

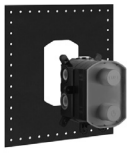

44665

In-wall rough valve for wall-mounted electronic mixer.
• 1/2”connections

031	Chrome	1.452

44665+54414

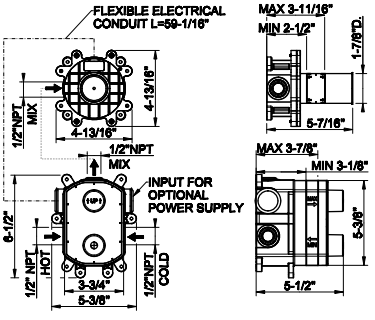





54414

TRIM PARTS ONLY Wall-mounted electronic mixer. CESELLO.
• Spout projection 5-3/4”
• 1/2” connections
• Max flow rate 1.2 GPM - 0.2GPC
• Drain not included - See DRAINS section
• Requires in-wall rough valve 44665
• 10 sec flow cycle
• Sensor imbedded in the spout
• ADA compliant

239	Steel Br.	3.256	708	Copper Br. PVD	4.819
299	Matte Black	4.397	726	Warm Bronze Br. PVD	4.819
707	Black Metal Br. PVD	4.819	727	Brass Br. PVD	4.819

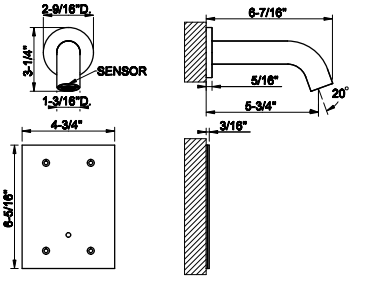

44665+54415

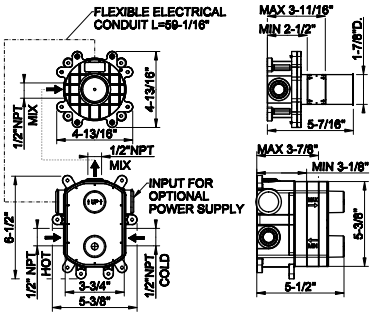

44665

In-wall rough valve for wall-mounted electronic mixer.
- 1/2"connections

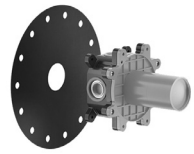



031	Chrome	1.452

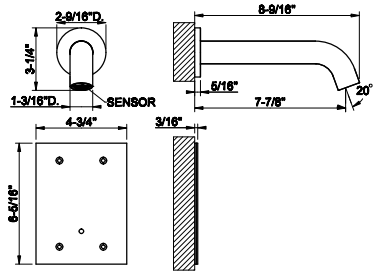

54415

TRIM PARTS ONLY Wall-mounted electronic mixer. CESELLO.
- Spout projection 7-7/8"
- 1/2" connections
- Max flow rate 1.2 GPM - 0.2GPC
- Drain not included - See DRAINS section
- Requires in-wall rough valve 44665
- 10 sec flow cycle
- Sensor imbedded in the spout
- ADA compliant





239	Steel Br.	3.487	708	Copper Br. PVD	5.162
299	Matte Black	4.707	726	Warm Bronze Br. PVD	5.162
707	Black Metal Br. PVD	5.162	727	Brass Br. PVD	5.162

44679+54020

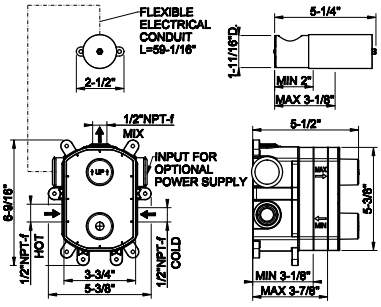

44679

In-wall rough valve for wall-mounted electronic separate control.
- 1/2"connections

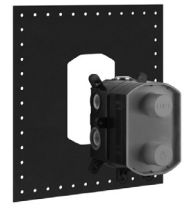

031	Chrome	1.053

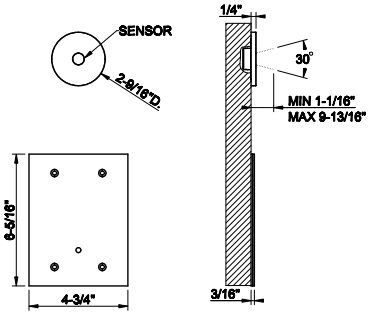

54020

TRIM PARTS ONLY Wall-mounted electronic separate control with temperature and flow rate setting box.
- 1/2 connections
- Requiresin-wall rough valve 44679
- ADA compliant
- 10 sec flow cycle





239	Steel Br.	1.778	708	Copper Br. PVD	2.632
299	Matte Black	2.401	726	Warm Bronze Br. PVD	2.632
707	Black Metal Br. PVD	2.632	727	Brass Br. PVD	2.632

59023



Electronic basin mixer with temperature and water flow rate adjustment through under-basin control
- 1/2” connections
- Spout projection 6-1/16”
- Height 5-1/4”
- Drain not included - See DRAINS section
- Max flow rate 1.2 GPM - 0.2 GPC
- 10 sec flow cycle
- ADAcompliant

031	Chrome	2.245	708	Copper Br. PVD	3.548
149	Finox Br. Nickel	3.031	735	Warm Bronze PVD	3.548
299	Matte Black	3.031	726	Warm Bronze Br. PVD	3.548
720	Nickel PVD	3.323	710	Brass PVD	3.323
706	Black Metal PVD	3.323	727	Brass Br. PVD	3.548
707	Black Metal Br. PVD	3.548	279	Matte White	3.031
030	Copper PVD	3.323			

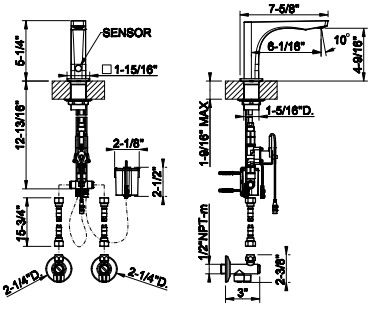

44679

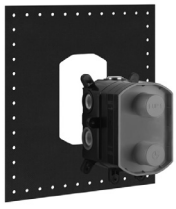

In-wall rough valve for wall-mounted electronic separate control.
- 1/2”connections

031	Chrome	1.053

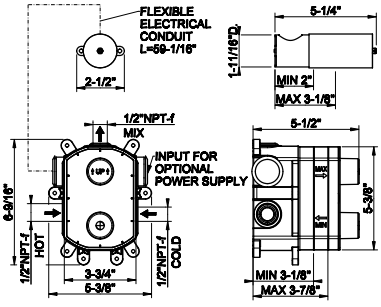

44679+59107

59107

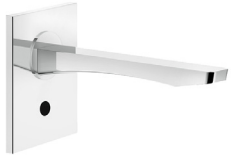

TRIM PARTS ONLY Wall-mounted electronic mixer.
- 1/2” connections
- Spout projection 8-7/16”
- Drain not included - See DRAINS section
- Max flow rate 1.2 GPM - 0.2 GPC
- Requires in-wall rough valve 44679
- 10 sec flow cycle
- ADA compliant

031	Chrome	2.190	708	Copper Br. PVD	3.459
149	Finox Br. Nickel	2.956	735	Warm Bronze PVD	3.240
299	Matte Black	2.956	726	Warm Bronze Br. PVD	3.459
720	Nickel PVD	3.240	710	Brass PVD	3.240
706	Black Metal PVD	3.240	727	Brass Br. PVD	3.459
707	Black Metal Br. PVD	3.459	279	Matte White	2.956
030	Copper PVD	3.240			

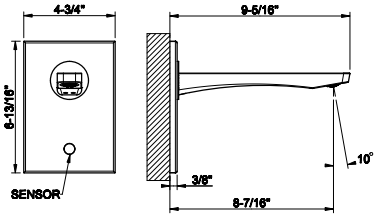

44679+59029

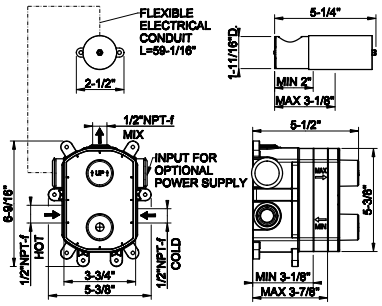

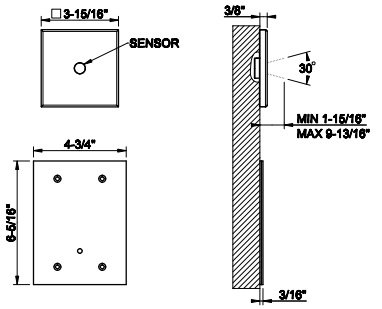

44679

In-wall rough valve for wall-mounted electronic separate control.
- 1/2"connections

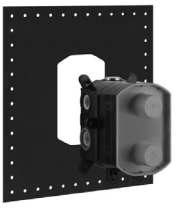

031	Chrome	1.053

59029

TRIM PARTS ONLY Wall mounted electronic separate control with temperature and flow rate setting box.
- 1/2 connections
- Requiresin-wall rough valve 44679
- ADA compliant
- 10 sec flow cycle



031	Chrome	1.778	708	Copper Br. PVD	2.809
149	Finox Br. Nickel	2.401	735	Warm Bronze PVD	2.632
299	Matte Black	2.401	726	Warm Bronze Br. PVD	2.809
720	Nickel PVD	2.632	710	Brass PVD	2.632
706	Black Metal PVD	2.632	727	Brass Br. PVD	2.809
707	Black Metal Br. PVD	2.809	279	Matte White	2.401
030	Copper PVD	2.632			

44679+20130

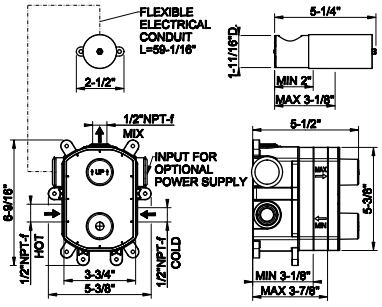

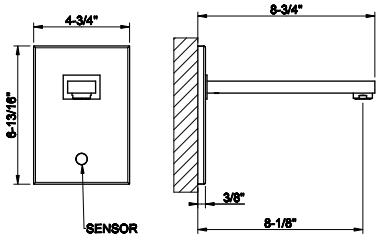

44679

In-wall rough valve for wall-mounted electronic separate control.
- 1/2"connections

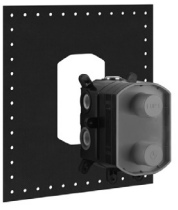

031	Chrome	1.053

20130

TRIM PARTS ONLY Wall-mounted electronic mixer with spout
- Spout projection 8-1/8"
- 1/2" connections
- Drain not included - SeeDRAINS section
- Requires rough valve 44679
- Max flow rate 1.2 GPM - 0.2 GPC
- 10 sec flow cycle
- ADA compliant



031	Chrome	2.415	030	Copper PVD	3.576
149	Finox Br. Nickel	3.261	708	Copper Br. PVD	3.816
299	Matte Black	3.261	735	Warm Bronze PVD	3.576
720	Nickel PVD	3.576	726	Warm Bronze Br. PVD	3.816
706	Black Metal PVD	3.576	710	Brass PVD	3.576
707	Black Metal Br. PVD	3.816	727	Brass Br. PVD	3.816

30653

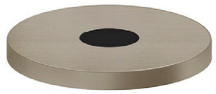

Electronic separate control with under-basin mixer to regulate flow rate and temperature.
- 1/2” connections
- ADA Compliant
- 10 sec flow cycle

031	Chrome	1.728	726	Warm Bronze Br. PVD	2.241
149	Finox Br. Nickel	2.166	710	Brass PVD	2.207
299	Matte Black	2.166	727	Brass Br. PVD	2.241
720	Nickel PVD	2.207	246	Gold PVD	2.902
706	Black Metal PVD	2.207	716	Gold Br. PVD	2.902
707	Black Metal Br. PVD	2.241	187	Aged Bronze	2.241
030	Copper PVD	2.207	713	Antique Brass	2.241
708	Copper Br. PVD	2.241	279	Matte White	2.166
735	Warm Bronze PVD	2.207			

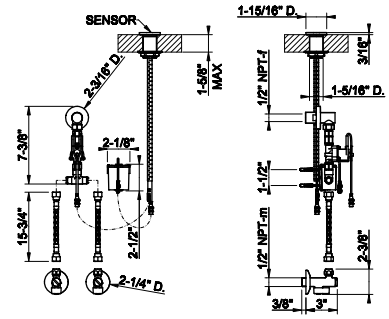

44679

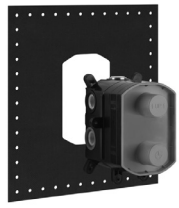

In-wall rough valve for wall-mounted electronic separate control.
- 1/2”connections

031	Chrome	1.053

44679+30651

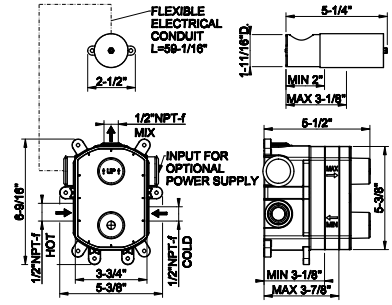

30651



TRIMSPARTS ONLY Wall-mounted electronic separate control with temperature and flow rate setting box.
- 1/2 connections
- Requiresin-wall rough valve 44679
- ADA Compliant
- 10 sec flow cycle

031	Chrome	1.827	726	Warm Bronze Br. PVD	2.886
149	Finox Br. Nickel	2.466	710	Brass PVD	2.703
299	Matte Black	2.466	727	Brass Br. PVD	2.886
720	Nickel PVD	2.703	246	Gold PVD	3.069
706	Black Metal PVD	2.703	716	Gold Br. PVD	3.069
707	Black Metal Br. PVD	2.886	187	Aged Bronze	2.886
030	Copper PVD	2.703	713	Antique Brass	2.886
708	Copper Br. PVD	2.886	279	Matte White	2.466
735	Warm Bronze PVD	2.703			

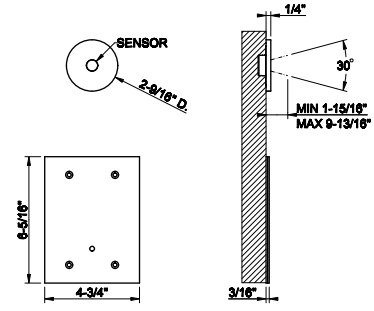

44679+30654

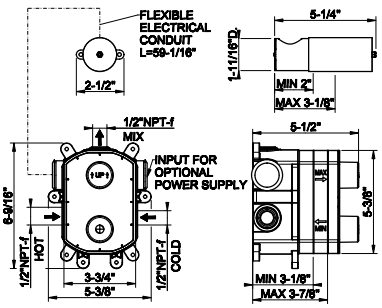

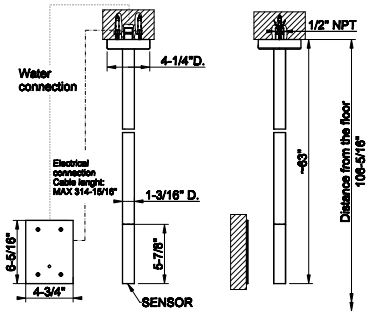

44679

In-wall rough valve for wall-mounted electronic separate control.
- 1/2"connections

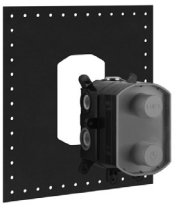

031	Chrome	1.053

30654

TRIM PARTS ONLY Ceiling-mounted electronic mixer.
- 1/2" connections
- Spout length 63"
- Drain not included - See DRAINS section
- Max flow rate 1.2 GPM - 0.2 GPC
- Requires in-wall rough valve 44679
- 10 sec flow cycle
- ADA compliant



031	Chrome	4.827	726	Warm Bronze Br. PVD	7.627
149	Finox Br. Nickel	6.518	710	Brass PVD	7.144
299	Matte Black	6.518	727	Brass Br. PVD	7.627
720	Nickel PVD	7.144	246	Gold PVD	8.110
706	Black Metal PVD	7.144	716	Gold Br. PVD	8.110
707	Black Metal Br. PVD	7.627	187	Aged Bronze	7.627
030	Copper PVD	7.144	713	Antique Brass	7.627
708	Copper Br. PVD	7.627	279	Matte White	6.518
735	Warm Bronze PVD	7.144			

44680

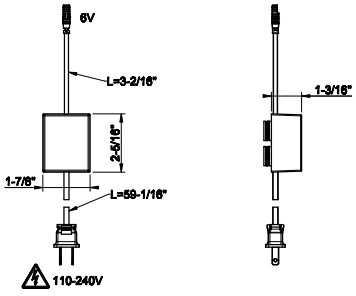

Power supplier for separate control as an alternative to the battery supplied in the standard version



031	Chrome	635

44681

Power supply unit for multiple installation, up to 5 devices



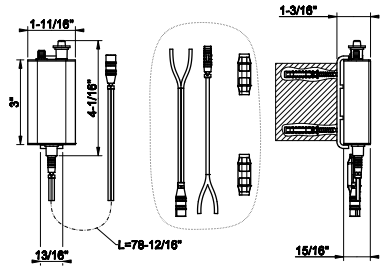

031	Chrome	473

44682

26ft extension for power supplier



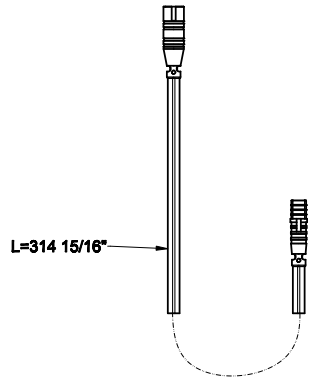

031	Chrome	226

GESSI

HOME

DECOR

VASES



68515

Vase RIGATO 4” diameter, 11-15/16”H



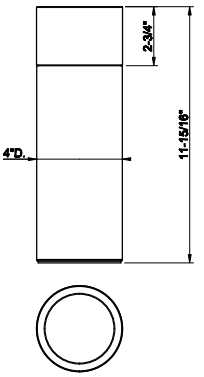

707	Black Metal Br. PVD	2.472	726	Warm Bronze Br. PVD	2.472

68517

Vase RIGATO 4” diameter, 14-3/4”H



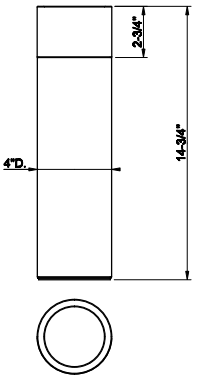

707	Black Metal Br. PVD	2.721	726	Warm Bronze Br. PVD	2.721

68519

Vase RIGATO 4” diameter, 17-1/2”H



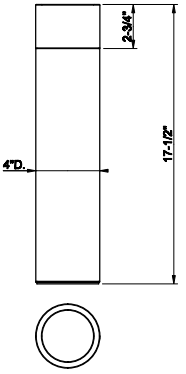

707	Black Metal Br. PVD	2.971	726	Warm Bronze Br. PVD	2.971

68521

Vase RIGATO 6-5/8” diameter, 11-15/16”H



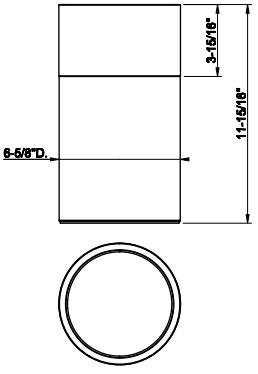

707	Black Metal Br. PVD	7.487	726	Warm Bronze Br. PVD	7.487

HOME VASES

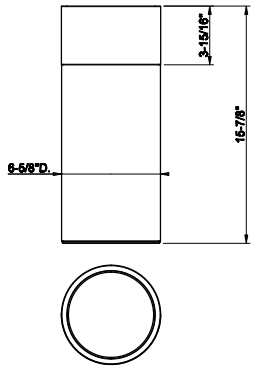

68523

Vase RIGATO 6-5/8” diameter, 15-7/8” H



707	Black Metal Br. PVD	8.049	726	Warm Bronze Br. PVD	8.049

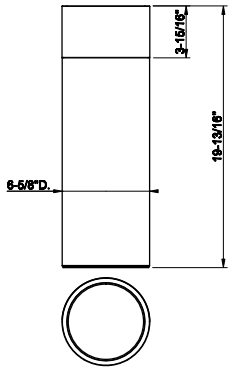

68525

Vase RIGATO 6-5/8” diameter, 19-13/16”H



707	Black Metal Br. PVD	8.735	726	Warm Bronze Br. PVD	8.735

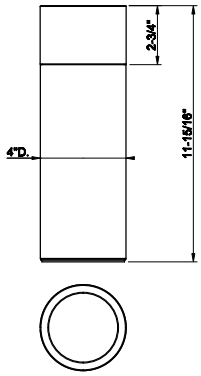

68615

Vase DIAMANTATO 4” diameter, 11-13/16”H



707	Black Metal Br. PVD	2.472	726	Warm Bronze Br. PVD	2.472

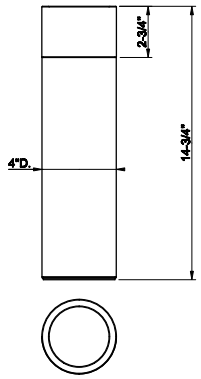

68617

Vase DIAMANTATO 4” diameter, 14-3/4”H



707	Black Metal Br. PVD	2.721	726	Warm Bronze Br. PVD	2.721



68619

Vase DIAMANTATO 4” diameter, 17-1/2”H

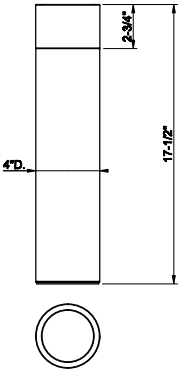

707	Black Metal Br. PVD	2.971	726	Warm Bronze Br. PVD	2.971



68621

Vase DIAMANTATO 6-5/8” diameter, 11-15/16”H

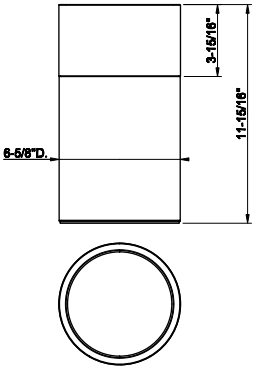

707	Black Metal Br. PVD	7.487	726	Warm Bronze Br. PVD	7.487



68623

Vase DIAMANTATO 6-5/8” diameter, 15-7/8” H

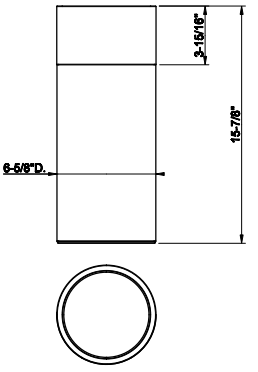

707	Black Metal Br. PVD	8.049	726	Warm Bronze Br. PVD	8.049



68625

Vase DIAMANTATO 6-5/8” diameter, 19-13/16”H

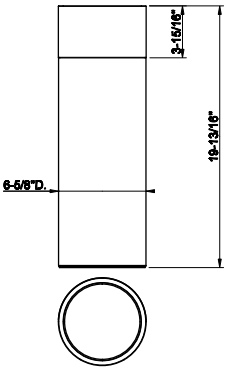

707	Black Metal Br. PVD	8.735	726	Warm Bronze Br. PVD	8.735

HOME VASES

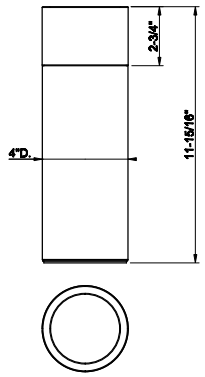

68315

Vase TRAME 4” diameter, 11-15/16”H



707	Black Metal Br. PVD	2.472	726	Warm Bronze Br. PVD	2.472

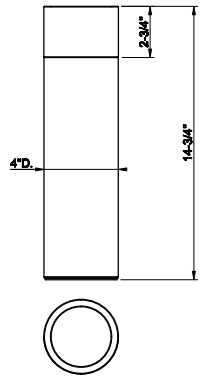

68317

Vase TRAME 4” diameter, 14-3/4”H



707	Black Metal Br. PVD	2.721	726	Warm Bronze Br. PVD	2.721

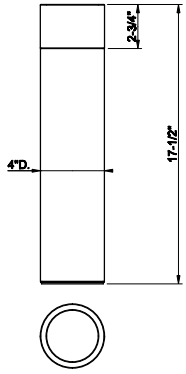

68319

Vase TRAME 4” diameter, 17-1/2”H



707	Black Metal Br. PVD	2.971	726	Warm Bronze Br. PVD	2.971

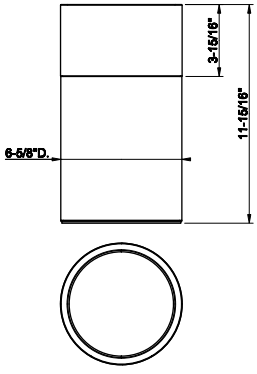

68321

Vase TRAME 6-5/8” diameter, 11-15/16”H



707	Black Metal Br. PVD	7.487	726	Warm Bronze Br. PVD	7.487

68323

Vase TRAME 6-5/8” diameter, 15-7/8” H



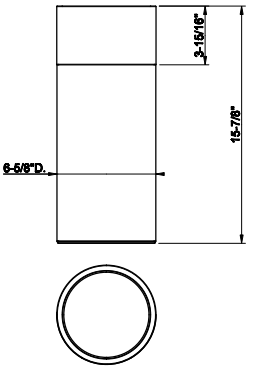

707	Black Metal Br. PVD	8.735	726	Warm Bronze Br. PVD	8.735

68325

Vase TRAME 6-5/8” diameter, 19-13/16”H



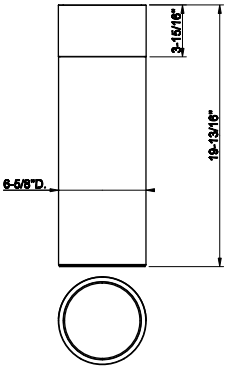

707	Black Metal Br. PVD	8.049	726	Warm Bronze Br. PVD	8.049

68115

Vase INTRECCIO 4” diameter, 11-15/16”H



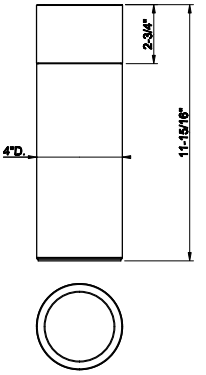

707	Black Metal Br. PVD	2.472	726	Warm Bronze Br. PVD	2.472

68117

Vase INTRECCIO 4” diameter, 14-3/4”H



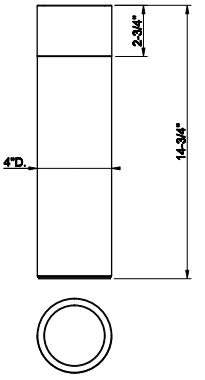

707	Black Metal Br. PVD	2.721	726	Warm Bronze Br. PVD	2.721

HOME VASES

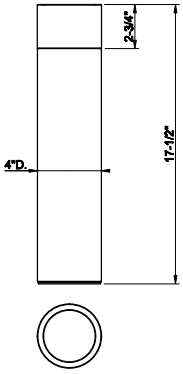

68119

Vase INTRECCIO 4” diameter, 17-1/2”H



707	Black Metal Br. PVD	2.971	726	Warm Bronze Br. PVD	2.971

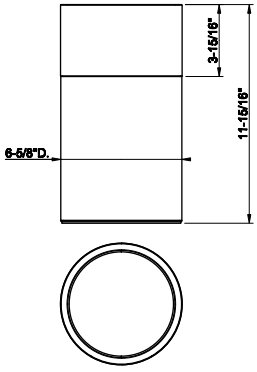

68121

Vase INTRECCIO 6-5/8” diameter, 11-15/16”H



707	Black Metal Br. PVD	7.487	726	Warm Bronze Br. PVD	7.487

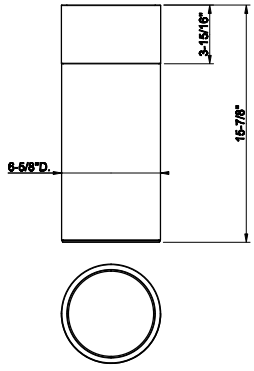

68123

Vase INTRECCIO 6-5/8” diameter, 15-7/8” H



707	Black Metal Br. PVD	8.049	726	Warm Bronze Br. PVD	8.049

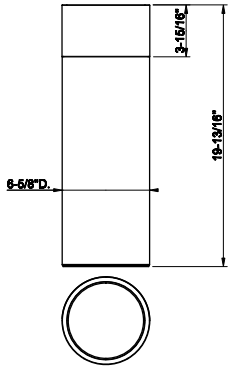

68125

Vase INTRECCIO 6-5/8” diameter, 19-13/16”H



707	Black Metal Br. PVD	8.735	726	Warm Bronze Br. PVD	8.735

68115

Vase INTRECCIO 4” diameter, 11-15/16”H



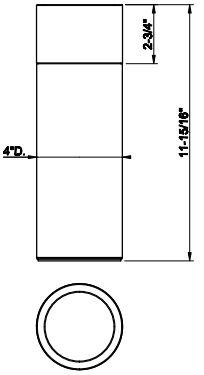

707	Black Metal Br. PVD	2.472	726	Warm Bronze Br. PVD	2.472

68117

Vase INTRECCIO 4” diameter, 14-3/4”H



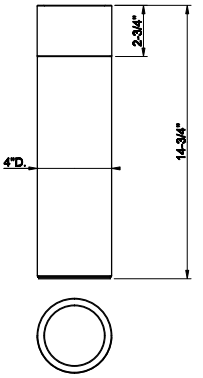

707	Black Metal Br. PVD	2.721	726	Warm Bronze Br. PVD	2.721

68119

Vase INTRECCIO 4” diameter, 17-1/2”H



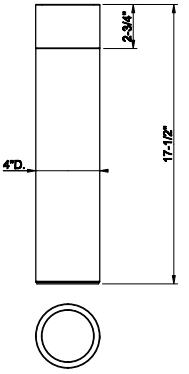

707	Black Metal Br. PVD	2.971	726	Warm Bronze Br. PVD	2.971

68121

Vase INTRECCIO 6-5/8” diameter, 11-15/16”H



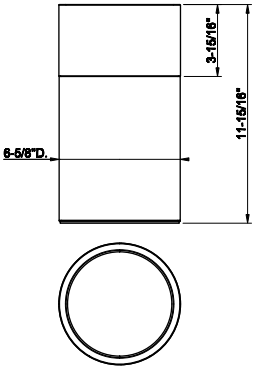

707	Black Metal Br. PVD	7.487	726	Warm Bronze Br. PVD	7.487

HOME VASES

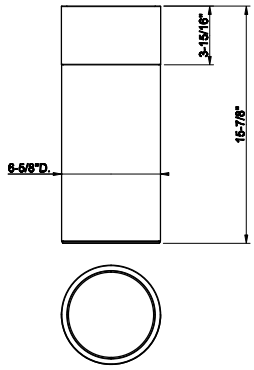

68123

Vase INTRECCIO 6-5/8” diameter, 15-7/8” H



707	Black Metal Br. PVD	8.049	726	Warm Bronze Br. PVD	8.049

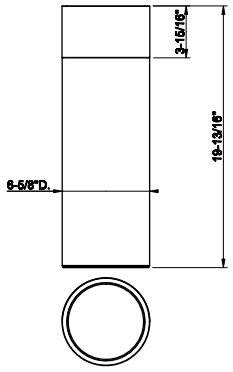

68125

Vase INTRECCIO 6-5/8” diameter, 19-13/16”H



707	Black Metal Br. PVD	8.735	726	Warm Bronze Br. PVD	8.735

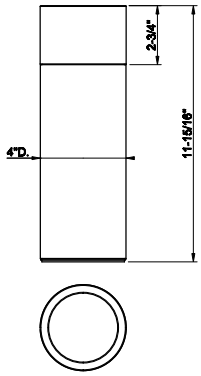

68215

Vase MECCANICA 4” diameter, 11-15/16”H



707	Black Metal Br. PVD	2.472	726	Warm Bronze Br. PVD	2.472

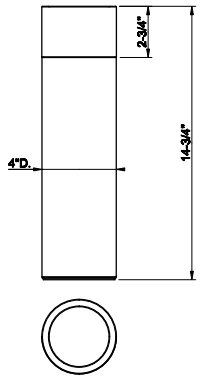

68217

Vase MECCANICA 4” diameter, 14-3/4”H



707	Black Metal Br. PVD	2.721	726	Warm Bronze Br. PVD	2.721



68219

Vase MECCANICA 4” diameter, 17-1/2”H

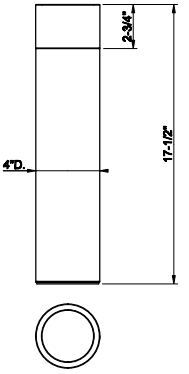

707	Black Metal Br. PVD	2.971	726	Warm Bronze Br. PVD	2.971



68221

Vase MECCANICA 6-5/8” diameter, 11-15/16”H

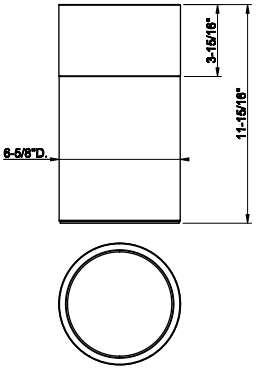

707	Black Metal Br. PVD	7.487	726	Warm Bronze Br. PVD	7.487



68223

Vase MECCANICA 6-5/8” diameter, 15-7/8”H

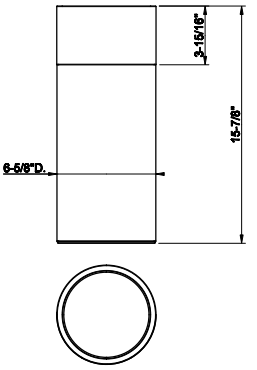

707	Black Metal Br. PVD	8.049	726	Warm Bronze Br. PVD	8.049



68225

Vase MECCANICA 6-5/8” diameter, 19-13/16”H

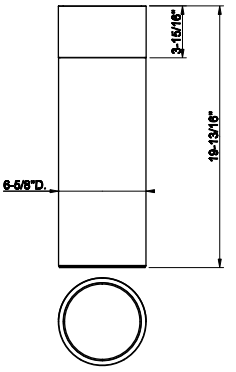

707	Black Metal Br. PVD	8.735	726	Warm Bronze Br. PVD	8.735

HOME VASES

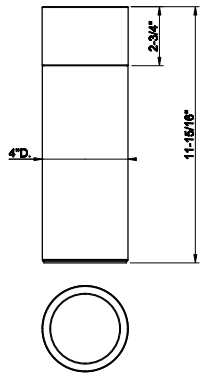

68415

Vase CESELLO 4” diameter, 11-15/16”H



707	Black Metal Br. PVD	2.472	726	Warm Bronze Br. PVD	2.472

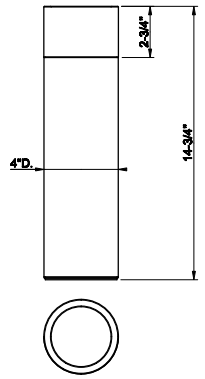

68417

Vase CESELLO 4” diameter, 14-3/4”H



707	Black Metal Br. PVD	2.721	726	Warm Bronze Br. PVD	2.721

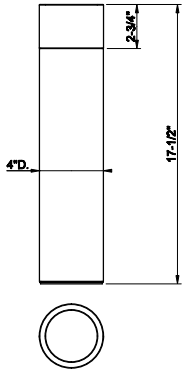

68419

Vase CESELLO 4” diameter, 17-1/2”H



707	Black Metal Br. PVD	2.971	726	Warm Bronze Br. PVD	2.971

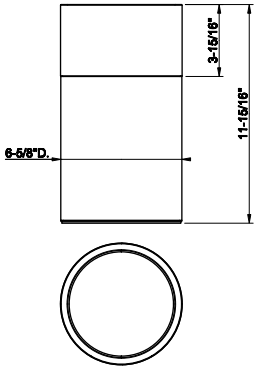

68421

Vase CESELLO 6-5/8” diameter, 11-15/16”H



707	Black Metal Br. PVD	7.487	726	Warm Bronze Br. PVD	7.487

68423

Vase CESELLO 6-5/8” diameter, 15-7/8”H



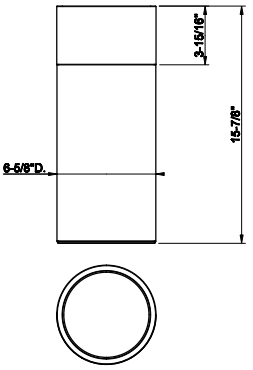

707	Black Metal Br. PVD	8.049	726	Warm Bronze Br. PVD	8.049

68425

Vase CESELLO 6-5/8” diameter, 19-13/16”H



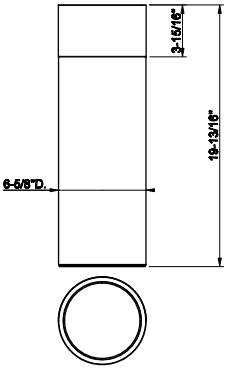

707	Black Metal Br. PVD	8.735	726	Warm Bronze Br. PVD	8.735

68730

Decorative Vase Presentation Case. INTRECCIO



707	Black Metal Br. PVD	2.547	726	Warm Bronze Br. PVD	2.547

68732

Decorative Vase Presentation Case. MECCANICA



707	Black Metal Br. PVD	2.547	726	Warm Bronze Br. PVD	2.547

HOME VASES

68734

Decorative Vase Presentation Case. TRAME



707	Black Metal Br. PVD	2.547	726	Warm Bronze Br. PVD	2.547

68736

Decorative Vase Presentation Case. CESELLO



707	Black Metal Br. PVD	2.547	726	Warm Bronze Br. PVD	2.547

68738

Decorative Vase Presentation Case. RIGATO



707	Black Metal Br. PVD	2.547	726	Warm Bronze Br. PVD	2.547

68740

Decorative Vase Presentation Case. DIAMANTATO



707	Black Metal Br. PVD	2.547	726	Warm Bronze Br. PVD	2.547



Via Manzoni

GESSI
EMPORIO

VIA MANZONI

39201



Single lever washbasin mixer with pop-up assembly
- Spout projection 5”
- Height 5-3/16”
- 1-1/4” D. pop-up drain and flexible hoses with 9/16” – 24 UNEF connections
- Max flow rate 1.2 GPM
- ADA compliant

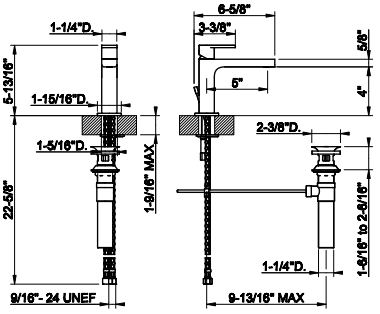

031	Chrome	728	299	Matte Black	984
149	Finox Br. Nickel	984			

39209



Tall single lever washbasin mixer without pop-up assembly
- Spout projection 8-3/8”
- Height 11-11/16”
- Drain not included - See DRAINS section
- Max flow rate 1.2 GPM
- ADA compliant

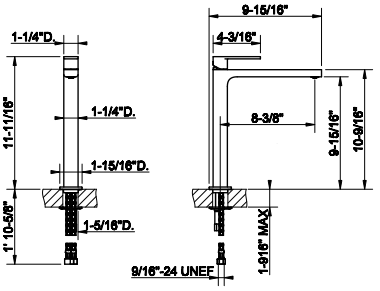

031	Chrome	1.023	299	Matte Black	1.380
149	Finox Br. Nickel	1.380			

39213



Widespread washbasin mixer with pop-up assembly
- Spout projection 5”
- Height 3-1/2”
- 1-1/4” D. pop-up drain and flexible hoses with 9/16” – 24UNEF connections
- Max flow rate 1.2 GPM
- ADA compliant

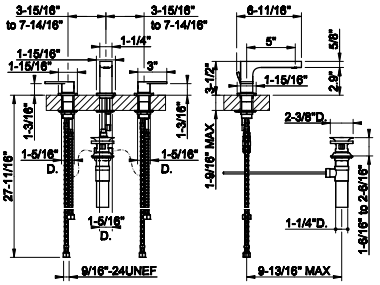

031	Chrome	1.169	299	Matte Black	1.578
149	Finox Br. Nickel	1.578			

39215



Widespread washbasin mixer without pop-up assembly
- Spout projection 5”
- Height 3-1/2”
- Drain not included - See DRAINS section
- Max flow rate 1.2 GPM
- ADA compliant

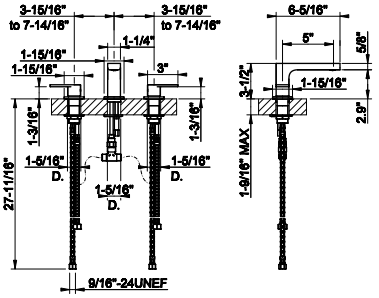

031	Chrome	1.137	299	Matte Black	1.535
149	Finox Br. Nickel	1.535			

VIA MANZONI

39212

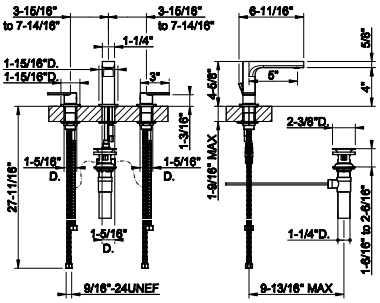

Widespread washbasin mixer with pop-up assembly
- Spout projection 5”
- Height 4-5/8”
- 1-1/4” D. pop-up drain and flexible hoses with 9/16” – 24 UNEF connections
- Max flow rate 1.2 GPM
- ADA compliant



031	Chrome	1.169	299	Matte Black	1.578
149	Finox Br. Nickel	1.578			

39302

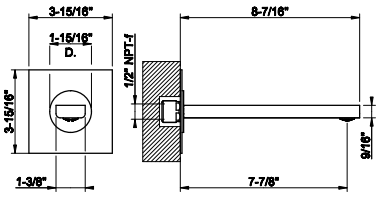

Wall-mounted washbasin spout only
- Projection 7-7/8”
- 1/2” connections
- Drain not included - See DRAINS section
- Requires mixercontrol 38709+26612
- Max flow rate 1.2 GPM

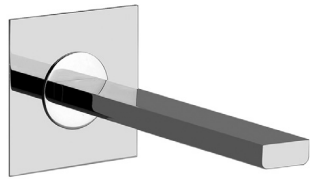

031	Chrome	663	299	Matte Black	895
149	Finox Br. Nickel	895			

38315+38722

38315

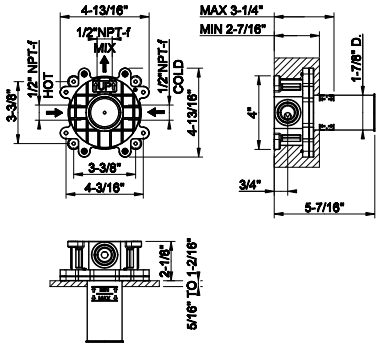

Built-in part for mixer one-way diverter

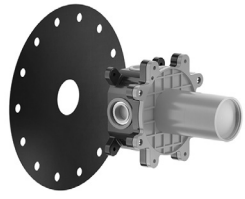

031	Chrome	416

38722

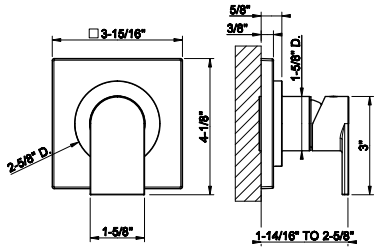

External parts mixer one-way diverter
- Drain not included - See DRAINS section
- Requires in-wall rough valve 38315



031	Chrome	490	299	Matte Black	663
149	Finox Br. Nickel	663			

38497

Built-in part basin mixer with spout

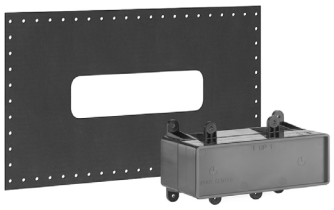

031	Chrome	547			

38497+44895

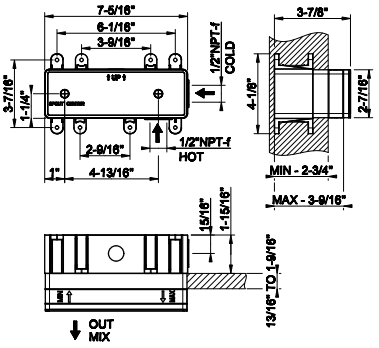

44895

External parts for built-in mixer with long spout, without waste
- Max flow rate 1,2 GPM
- Spout projection 8-3/16”
- Drain not included - See DRAINS section
- Requires in-wall rough valve 38497

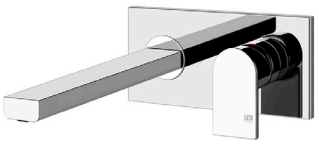

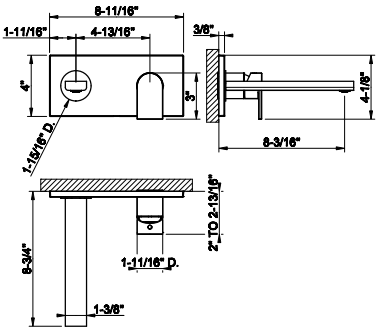

031	Chrome	981	299	Matte Black	1.325
149	Finox Br. Nickel	1.325			

39234

Three-hole roman tub set
- Diverter
- Spout - Projection 7-1/2”
- Handshower
- 59” flex hose
- Hand shower max flow rate 1.75 GPM
- Spout mixed flow rate 5 GPM at 60 PSI



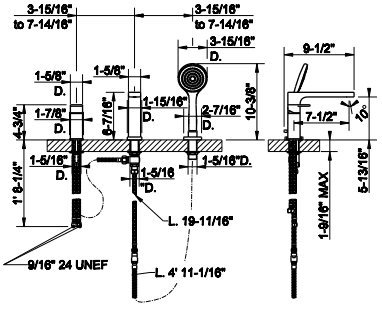

031	Chrome	1.803	299	Matte Black	2.433
149	Finox Br. Nickel	2.433			

38725

Wall-mounted bath spout
- 1/2” connections
- Spout projection 7-1/4”
- Spout flow rate 10.5 GPM at 60 PSI

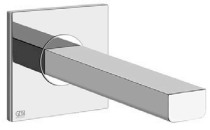

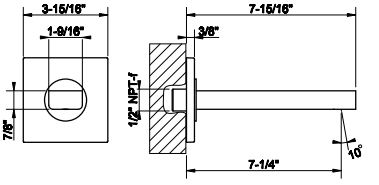

031	Chrome	627	299	Matte Black	847
149	Finox Br. Nickel	847			

38379+24982

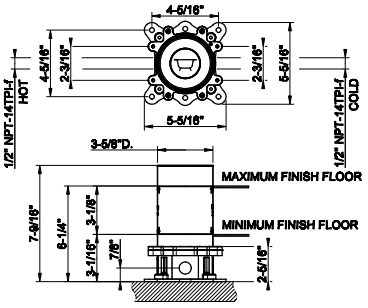

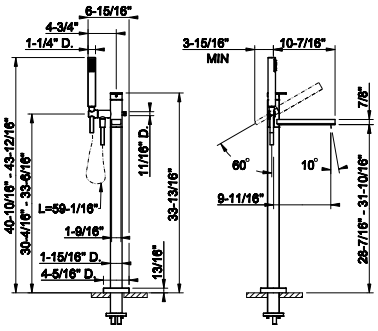

38379

Floor-mounted tub filler in-floor rough valve



031	Chrome	847

24982

TRIM PARTS ONLY Floor-mounted tub filler
- Handshower
- 59” flex hose
- Diverter
- Requires in-floor valve 38379
- Spout projection 9-11/16”
- Handshower max flow rate 1.75 GPM
- Spout max flow rate 6 GPM at 60 PSI

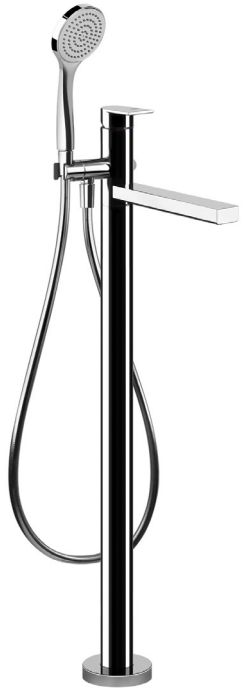

031	Chrome	3.408	299	Matte Black	4.600
149	Finox Br. Nickel	4.600			

Via Tortona



GESSI
EMPORIO



18601

Single lever washbasin mixer with pop-up assembly
- Spout projection 5”
- Height 5-13/16”
- 1-1/4” D. pop-up drain and flexible hoses with 9/16” – 24 UNEF connections.
- Max flow rate 1.2 GPM
- ADA compliant

031	Chrome	657	299	Matte Black	887
149	Finox Br. Nickel	887			

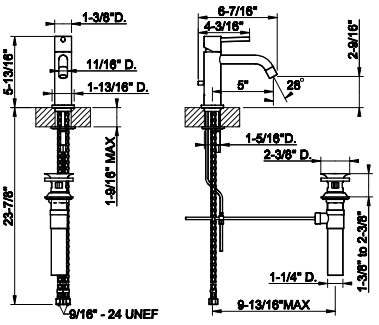



18602

Single lever washbasin mixer without pop-up assembly
- Spout projection 5”
- Height 5-13/16”
- Drain not included – see DRAINS section
- Max flow rate 1.2 GPM
- ADA Compliant

031	Chrome	616	299	Matte Black	832
149	Finox Br. Nickel	832			

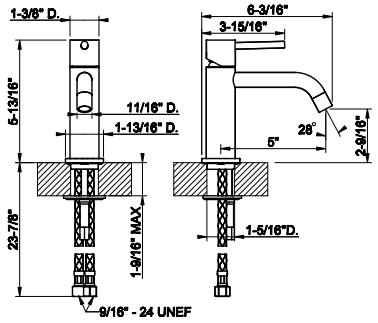



18604

Tall single lever washbasin mixer without pop-up assembly
- Spout projection 5”
- Height 11-3/4”
- Drain not included - See DRAINS section
- Max flow rate 1.2 GPM
- ADA compliant

031	Chrome	847	299	Matte Black	1.144
149	Finox Br. Nickel	1.144			

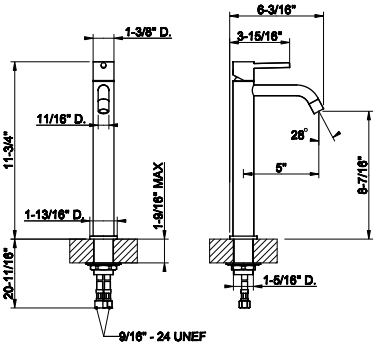



18606

Tall single lever washbasin mixer without pop-up assembly
- Spout projection 8-5/16”
- Height 11-3/4”
- Drain not included - SeeDRAINS section
- Max flow rate 1.2 GPM
- ADA compliant

031	Chrome	883	299	Matte Black	1.191
149	Finox Br. Nickel	1.191			

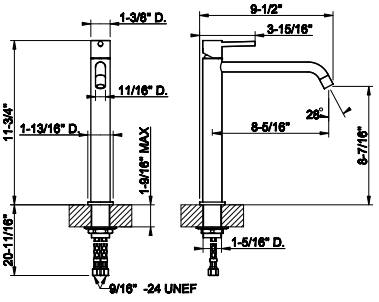

18611

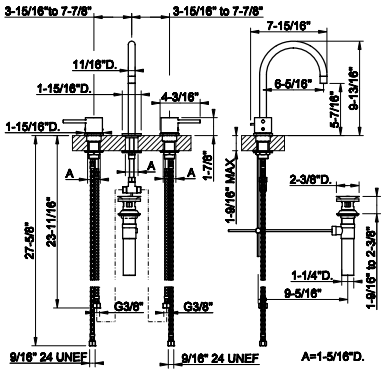

Widespread washbasin mixer with pop-up assembly
- Spout projection 5”
- Height 3-1/2”
- 1-1/4” D. pop-up drain and flexible hoses with 9/16” – 24UNEF connections
- Max flow rate 1.2 GPM
- ADA compliant



031	Chrome	1.669	299	Matte Black	2.253
149	Finox Br. Nickel	2.253			

18614

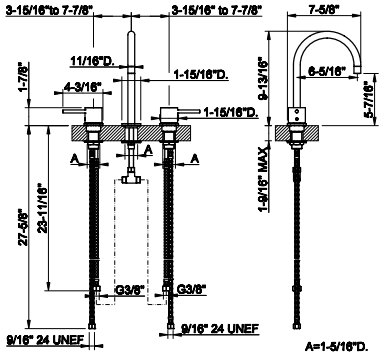

Widespread washbasin mixer without pop-up assembly
- Spout projection 5”
- Height 3-1/2”
- Drain not included - See DRAINS section
- Max flow rate 1.2 GPM
- ADA compliant



031	Chrome	1.637	299	Matte Black	2.211
149	Finox Br. Nickel	2.211			

38780

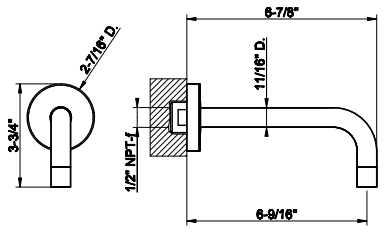

Wall-mounted spout only
- 1/2” connections with separate control (not included)
- Spout projection 6-9/16”
- Drain not included -See DRAINS section
- Requires mixer controls 19709 + 26612 or 19710 + 48112
- Max flow rate 1.2 GPM



031	Chrome	363	299	Matte Black	489
149	Finox Br. Nickel	489			

38783

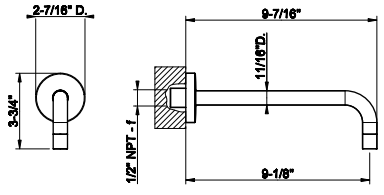

Wall-mounted spout only
- 1/2” connections with separate control (not included)
- Spout projection 9-1/8”
- Drain not included -See DRAINS section
- Requires mixer controls 19709 + 26612 or 19710 + 48112
- Max flow rate 1.2 GPM



031	Chrome	398	299	Matte Black	539
149	Finox Br. Nickel	539			

38315

Built-in part for mixer one-way diverter

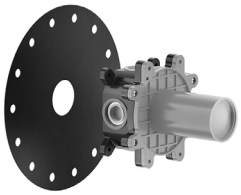

031	Chrome	416

38315+19712

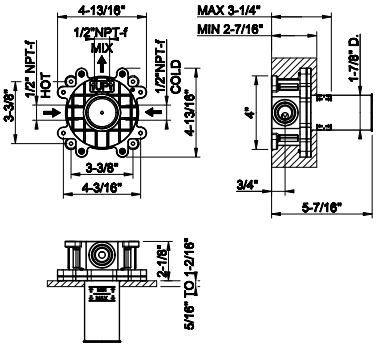

19712

External parts mixer one-way diverter
- Drain not included - See DRAINS section
- Requires in-wall rough valve 38315



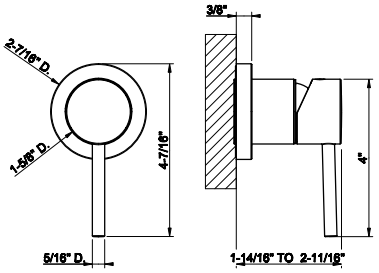

031	Chrome	465	299	Matte Black	845
149	Finox Br. Nickel	845			

18637

Three-hole roman tub set
- Diverter in the spout.
- Spout projection 7-3/8”
- Height 10-11/16”
- 59” flexible hose and pull-outantilimestone handshower.
- Handshower Max flow rate 1.75 GPM
- Spout: mixed flow rate 5 GPM at 60 PSI



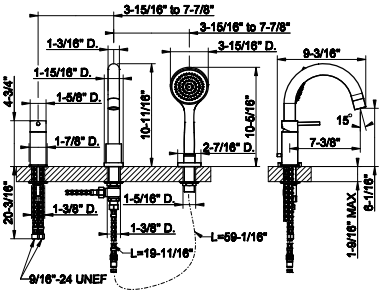

031	Chrome	1.512	299	Matte Black	2.041
149	Finox Br. Nickel	2.041			

38785

Wall mounted Bath spout only
- 1/2’ connections with separate control (not included)
- Spout projection 6-5/8”
- Drain not included- See DRAINS section
- Requires mixer control 18643
- Flow rate 6.4 GPM at 60 PSI



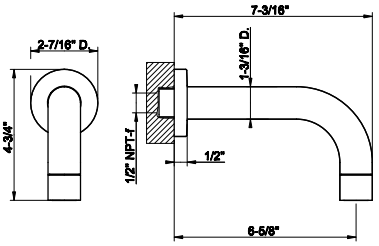

031	Chrome	433	299	Matte Black	585
149	Finox Br. Nickel	585			

VIA TORTONA

38787

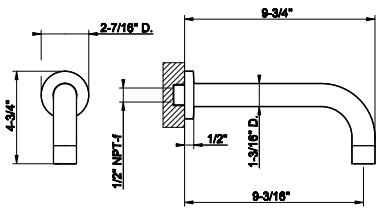

Wall mounted Bath spout only
- 1/2' connections with separate control (not included)
- Spout projection 9-3/16"
- Drain not included - See DRAINS section
- Requires mixer control 18643
- Flow rate 6.4 GPM at 60 PSI



031	Chrome	464	299	Matte Black	626
149	Finox Br. Nickel	626			

38379+24943

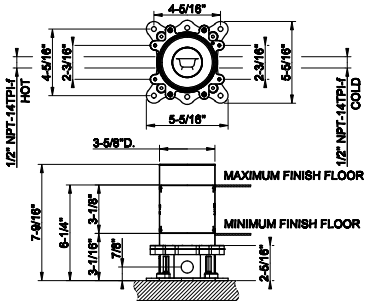

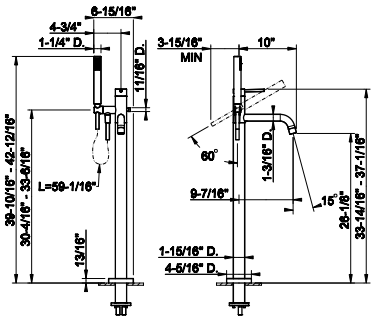

38379

Floor-mounted tub filler in-floor rough valve



031	Chrome	847

24943

TRIM PARTS ONLY Floor-mounted tub filler
- Handshower
- 59" flex hose
- Diverter
- Requires in-floor rough valve 38379
- Spout projection 9-7/16"
- Handshower max flow rate 1.75 GPM
- Spout max flow rate 6 GPM at 60 PSI

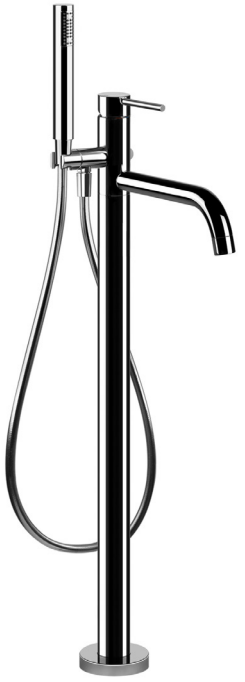

031	Chrome	3.408	299	Matte Black	4.600
149	Finox Br. Nickel	4.600			

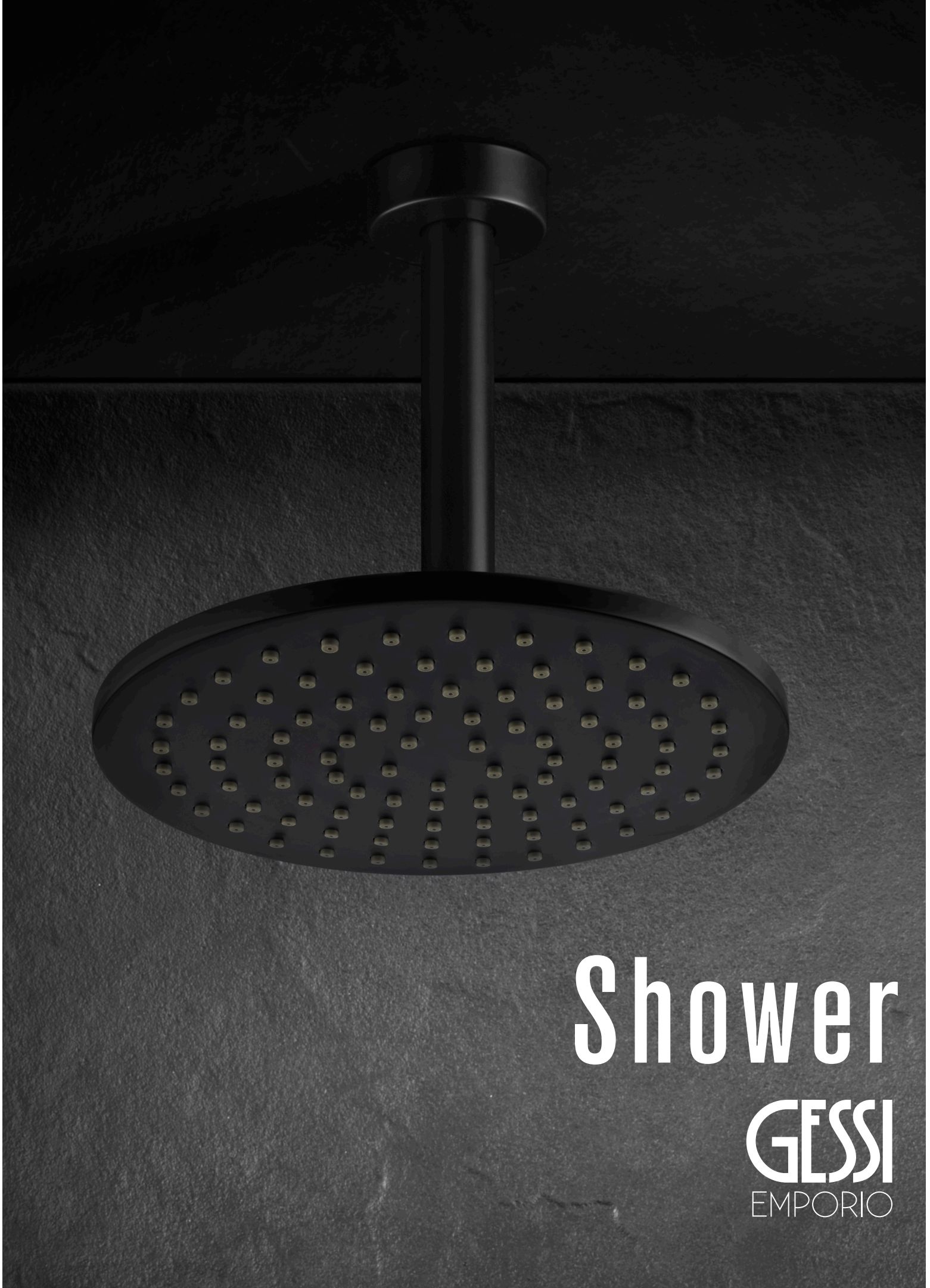

Shower

GESSI
EMPORIO

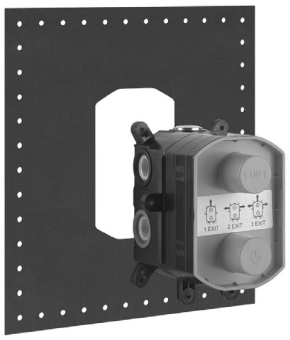

09270

In-wall thermostatic rough valve for 1/2/3-way diverter function
- 1/2” connections
- Vertical application
- Anti-scalding
- Non-Shared Function

031	Chrome	728

09270+38793

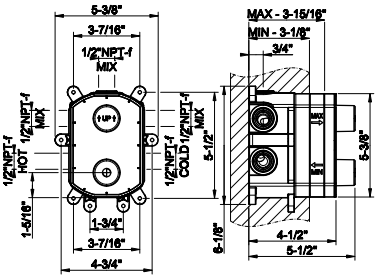



38793

TRIM PARTS ONLY External parts for thermostatic with single volume control
- Single backplate
- 1/2” connections
- Vertical application
- Anti-scalding
- Requires in-wall rough valve 09270

031	Chrome	1.023	299	Matte Black	1.380
149	Finox Br. Nickel	1.380			

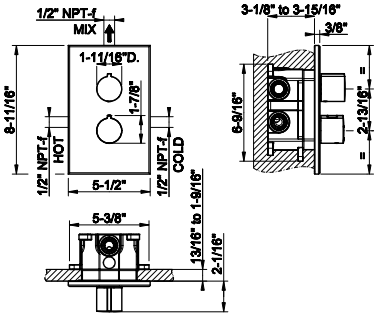

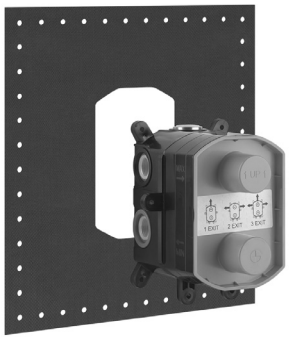

09270

In-wall thermostatic rough valve for 1/2/3-way diverter function
- 1/2” connections
- Vertical application
- Anti-scalding
- Non-Shared Function

031	Chrome	728

09270+38798

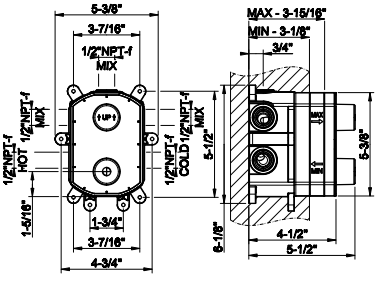

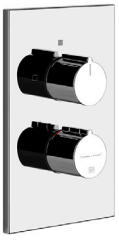

38798

TRIM PARTS ONLY External parts for 2-way thermostatic diverter and volume control
- Single backplate
- 1/2” connections
- Verticalapplication
- Anti-scalding
- Requires in-wall rough valve 09270

031	Chrome	1.023	299	Matte Black	1.380
149	Finox Br. Nickel	1.380			

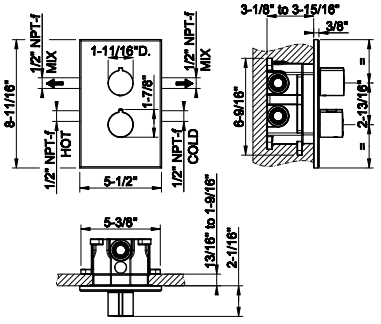

EMPORIO SHOWER

09270+38799

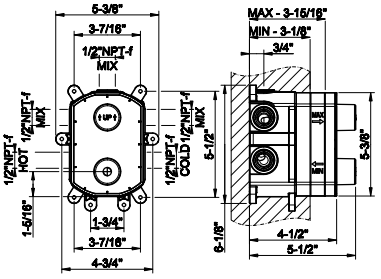

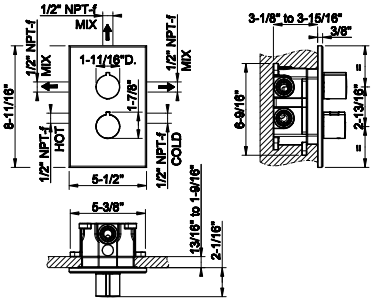

09270

In-wall thermostatic rough valve for 1/2/3-way diverter function
- 1/2” connections
- Vertical application
- Anti-scalding
- Non-Shared Function

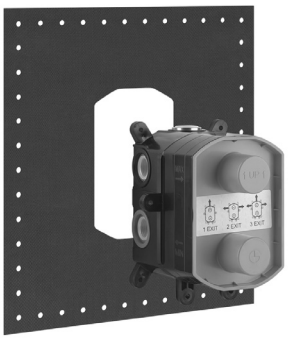

031	Chrome	728			

38799

TRIM PARTS ONLY External parts for 3-way thermostatic diverter and volume control
- Single backplate
- 1/2” connections
- Verticalapplication
- Anti-scalding
- Requires in-wall rough valve 09270



031	Chrome	1.023	299	Matte Black	1.380
149	Finox Br. Nickel	1.380			

09272+29673

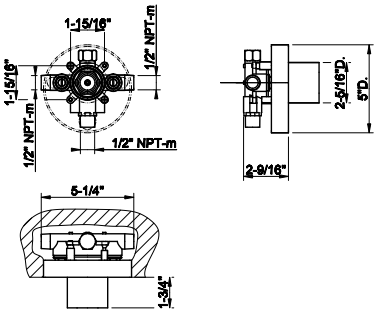

09272

In-wall single exit pressure balance rough valve
- 1/2” connections



031	Chrome	371			

29673

TRIM PARTS ONLY External parts for single exit pressure balance
- Single backplate
- 1/2” connections
- Requires in-wall rough valve 09272
- ADA compliant

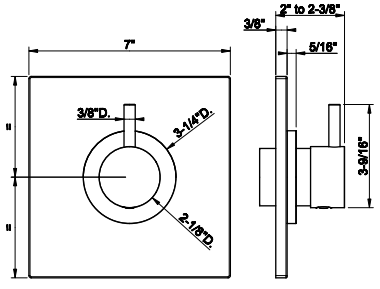



031	Chrome	627	299	Matte Black	847
149	Finox Br. Nickel	847			



09274

In-wall pressure balance rough valve with 2-way diverter
- 1/2” connections
- Non-Shared Function

031	Chrome	443

09274+29674

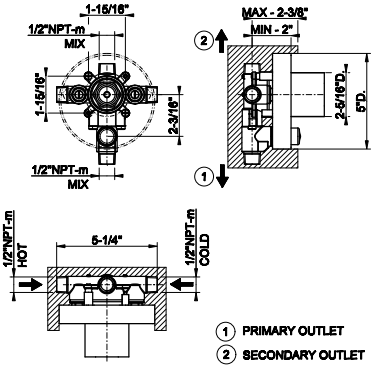



29674

TRIM PARTS ONLY External parts for pressure balance with 2-way diverter
- Single backplate
- 1/2” connections
- Requires in-wall rough valve 09274

031	Chrome	700	299	Matte Black	943
149	Finox Br. Nickel	943			

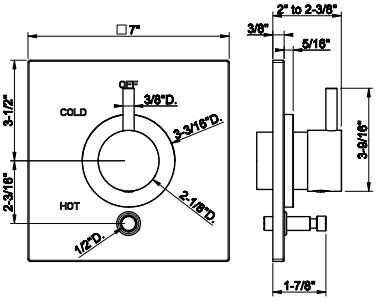

39349

Wall-mounted adjustable shower head with arm
- 1/2” connections
- Projection from wall to center 13-15/16”
- Total projection 19-13/16”
- Diameter 11-13/16”
- Max flow rate 1.75 GPM

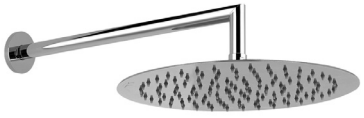

238	Mirror Steel	1.815	239	Steel Br.	1.815

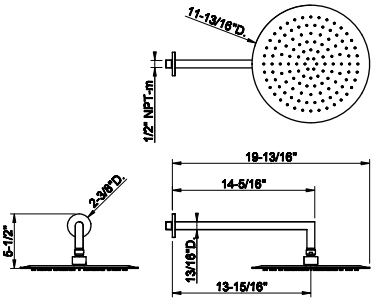

47284

Wall-mounted adjustable shower head with arm
- 1/2” connections
- Projection from wall to center 13-15/16”
- Total projection 17-7/8”
- Diameter 7-7/8”
- Max flow rate 1.75 GPM



031	Chrome	878	299	Matte Black	1.185
149	Finox Br. Nickel	1.185			

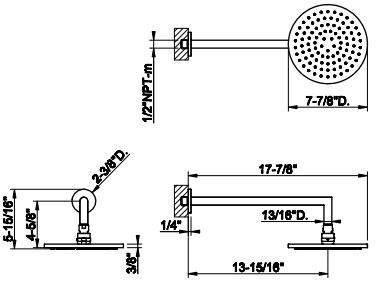

EMPORIO SHOWER

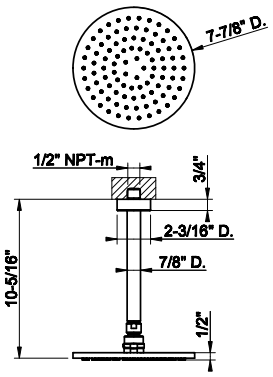

47288

Ceiling-mounted adjustable shower head with arm
- 1/2" connections
- Projection from ceiling 10-5/16"
- Diameter 7-7/8"
- Max flow rate 1.75 GPM



031	Chrome	792	299	Matte Black	1.069
149	Finox Br. Nickel	1.069			

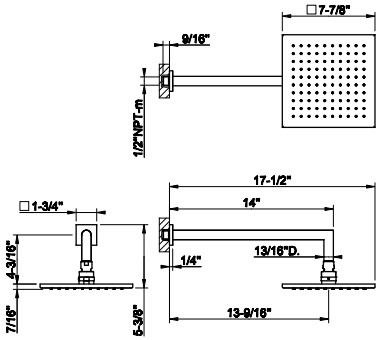

47286

Wall-mounted adjustable shower head with arm
- 1/2" connections
- Projection from wall to center 13-15/16"
- Total projection 17-7/8"
- Square 7-7/8"
- Max flow rate 1.75 GPM



031	Chrome	878	299	Matte Black	1.185
149	Finox Br. Nickel	1.185			

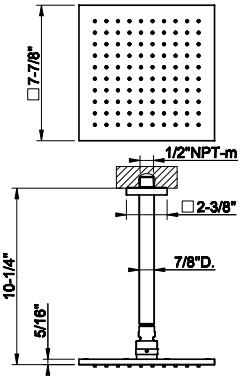

47290

Ceiling-mounted adjustable shower head with arm
- 1/2" connections
- Projection from ceiling 10-1/4"
- Square 7-7/8""
- Max flow rate 1.75 GPM



031	Chrome	792	299	Matte Black	1.069
149	Finox Br. Nickel	1.069			

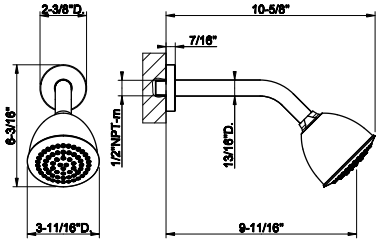

38763

Wall-mounted adjustable shower head with arm
- 1/2" connections
- Projection from wall to center 9-11/16"
- Total projection 10-5/8"
- Max flow rate 1.75 GPM



031	Chrome	619	299	Matte Black	837
149	Finox Br. Nickel	837			

38765



Wall-mounted adjustable multi-function shower head with arm
- 1/2” connections
- Projection from wall to center 9-1/2”
- Total projection 10-5/16”
- Max flow rate 1.75 GPM

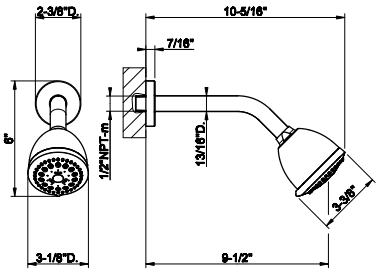

031	Chrome	742	299	Matte Black	1.002
149	Finox Br. Nickel	1.002			

39342



Handshower and adjustable sliding rail set
- Adjustable bar
- Adjustable hook
- 59” Flex hose
- Wall elbow
- Max flow rate 1.75 GPM

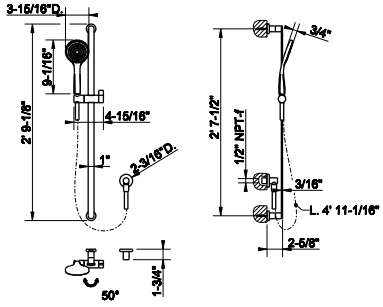

031	Chrome	1.691	299	Matte Black	2.284
149	Finox Br. Nickel	2.284			

71442



Handshower and adjustable sliding rail set
- Dual fuction handshower
- Adjustable bar
- Adjustable hook
- 59” Flex hose
- Wall elbow
- Max flow rate 1.75 GPM

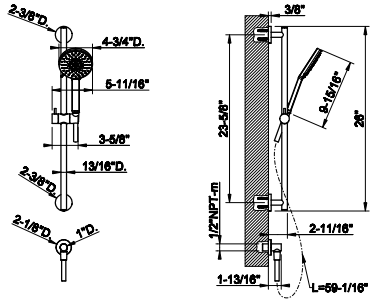

031	Chrome	825	299	Matte Black	1.115
149	Finox Br. Nickel	1.115			

39323



Handshower set
- Fixed hook.
- Wall elbow
- 59” flex hose
- Max flow rate 1.75 GPM

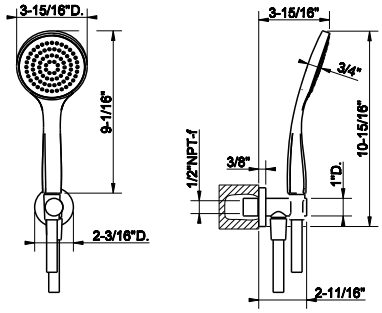

031	Chrome	736	299	Matte Black	995
149	Finox Br. Nickel	995			

EMPORIO SHOWER

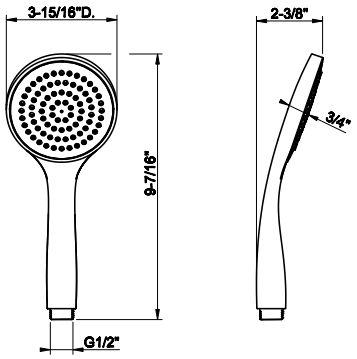

47254

Handshower
• Max flow rate 1.75 GPM



031	Chrome	237	299	Matte Black	310
149	Finox Br. Nickel	310			

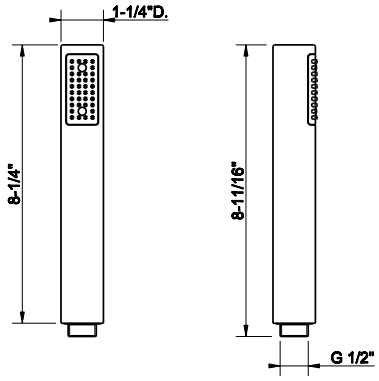

14372

Handshower
• Max flow rate 1.75 GPM



031	Chrome	134	299	Matte Black	225
149	Finox Br. Nickel	317			

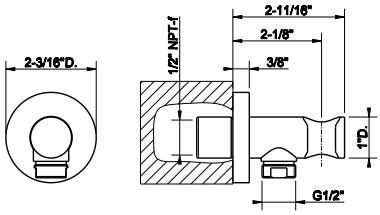

39361

Wall elbow with built in water intake and fixed hook
• 1/2” connection

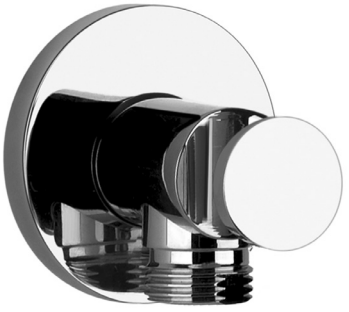

031	Chrome	296	299	Matte Black	400
149	Finox Br. Nickel	400			

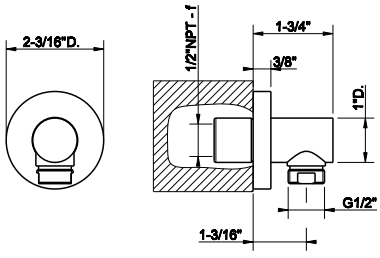

39369

Wall elbow
• 1/2” connections



031	Chrome	239	299	Matte Black	322
149	Finox Br. Nickel	322			



01637

59” flex hose

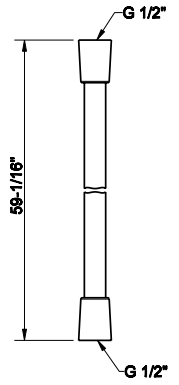

031	Chrome	134	299	Matte Black	173
149	Finox Br. Nickel	173			



01724

Metal flexible hose, 59” length, 1/2” connector.

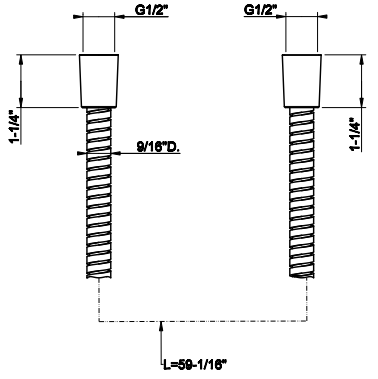

031	Chrome	196	299	Matte Black	260
149	Finox Br. Nickel	260			



Accessories

GESSI
EMPORIO

38849

Wall-mounted tissue holder
• Vertical or horizontal application



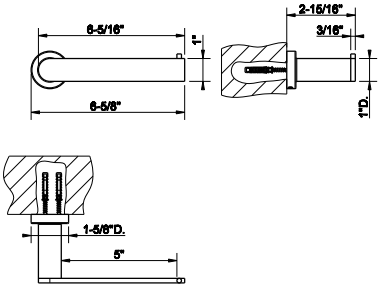

031	Chrome	245	299	Matte Black	332
149	Finox Br. Nickel	332			

38855

Wall mounted tissue holder with cover

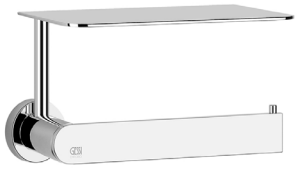

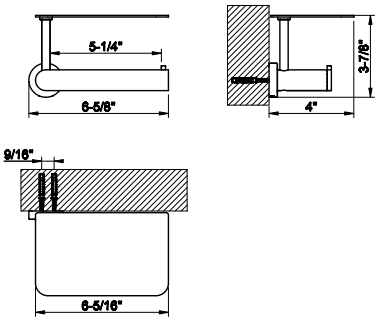

031	Chrome	480	299	Matte Black	649
149	Finox Br. Nickel	649			

38897

12" towel bar



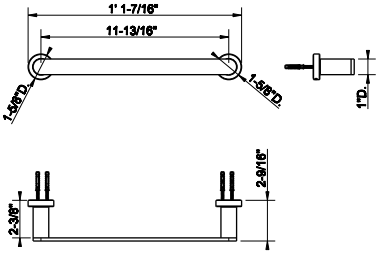

031	Chrome	312	299	Matte Black	421
149	Finox Br. Nickel	421			

38900

18" towel bar



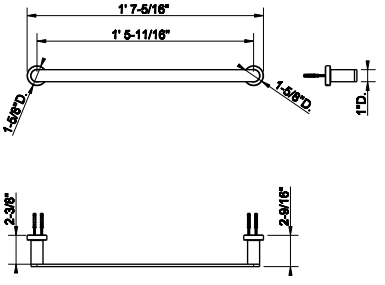

031	Chrome	333	299	Matte Black	450
149	Finox Br. Nickel	450			

EMPORIO ACCESSORIES

38903

24” towel bar

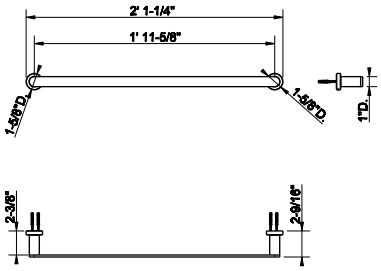



031	Chrome	406	299	Matte Black	549
149	Finox Br. Nickel	549			

38909

Towel ring

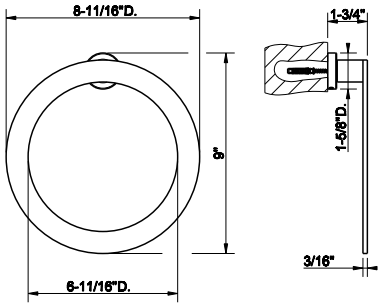



031	Chrome	443	299	Matte Black	596
149	Finox Br. Nickel	596			

38921

Wall mounted garment hook

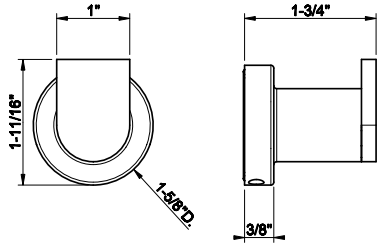

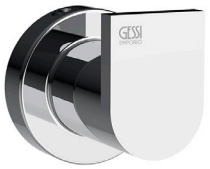

031	Chrome	179	299	Matte Black	241
149	Finox Br. Nickel	241			

38950

24” shelf with extended width 10-7/16”

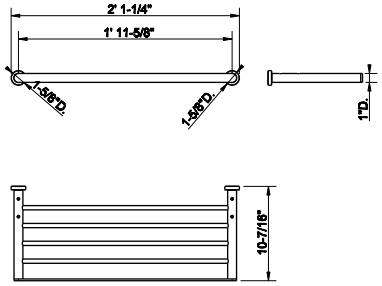



031	Chrome	1.177	299	Matte Black	1.587
149	Finox Br. Nickel	1.587			

38861

Corner shelf

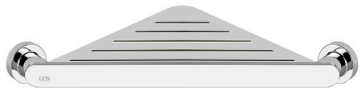

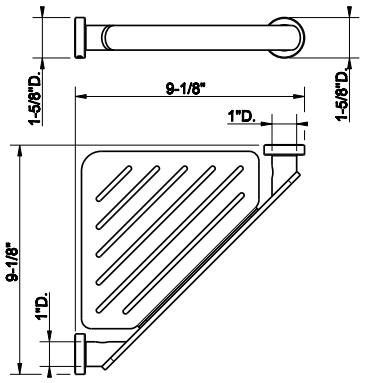

031	Chrome	773	299	Matte Black	1.045
149	Finox Br. Nickel	1.045			

38945

Shelf 30 cm

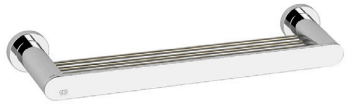

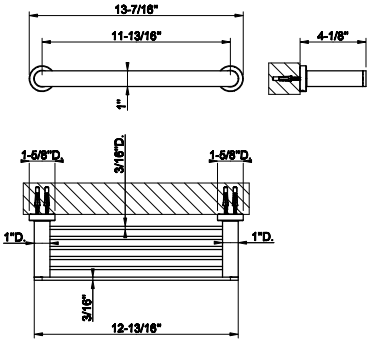

031	Chrome	668	299	Matte Black	903
149	Finox Br. Nickel	903			

38947

18" shelf



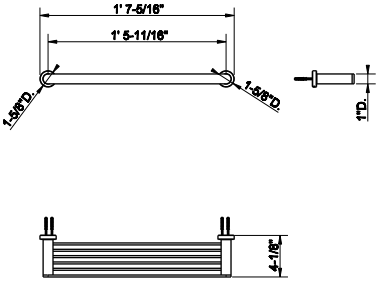

031	Chrome	663	299	Matte Black	895
149	Finox Br. Nickel	895			

38949

24" shelf



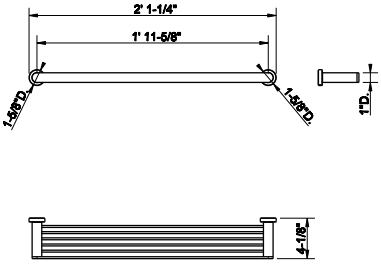

031	Chrome	700	299	Matte Black	943
149	Finox Br. Nickel	943			

EMPORIO ACCESSORIES

38918

18” towel rail for glass fixing

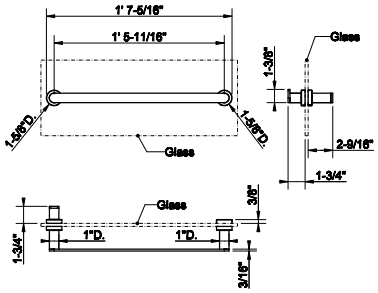

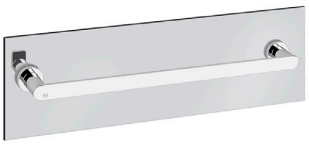

031	Chrome	582	299	Matte Black	786
149	Finox Br. Nickel	786			

GESSI®

DRAINS

DRAINS

ITEM	COMPATIBLE WITH				
					
54601/65601	54597				
					
39123/39124/39125	29048				
					
39133/39134/39135	29048				
					
66601	01313				

DRAINS

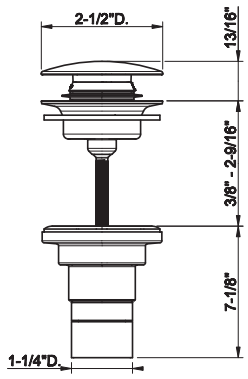

54597

1 1/4" push drain with or without overflow feature
- Recommended for Gessi 316 Collection



239	Steel Br.	212	726	Warm Bronze Br. PVD	313
708	Copper Br. PVD	313	727	Brass Br. PVD	313
707	Black Metal Br. PVD	313	299	Matte Black	287

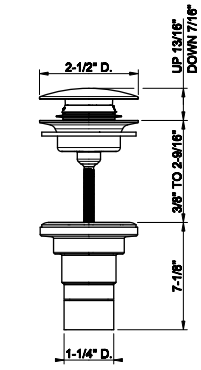

01427

1 1/4" push drain with or without overflow feature



031	Chrome	134	030	Copper PVD	379
239	Steel Br.	134	708	Copper Br. PVD	379
275	Matte Cipria	326	735	Warm Bronze PVD	379
273	Matte Greige	326	726	Warm Bronze Br. PVD	379
277	Glossy Ocra	326	710	Brass PVD	379
278	Glossy Coral	326	727	Brass Br. PVD	379
276	Matte Agave	326	246	Gold PVD	405
299	Matte Black	386	716	Gold Br. PVD	405
720	Nickel PVD	379	845	Dark Bronze	379
706	Black Metal PVD	379	187	Aged Bronze	379
707	Black Metal Br. PVD	379	713	Antique Brass	379

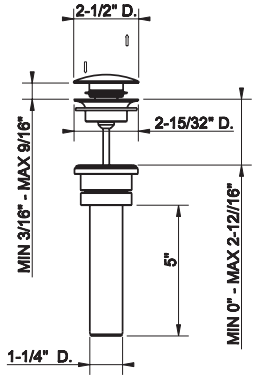

29048

1 1/4" push drain with or without overflow feature



031	Chrome	266	708	Copper Br. PVD	497
278	Glossy Coral	497	707	Black Metal Br. PVD	497
273	Matte Greige	360	735	Warm Bronze PVD	421
275	Matte Cipria	360	726	Warm Bronze Br. PVD	472
276	Matte Agave	360	710	Brass PVD	421
277	Glossy Ocra	497	727	Brass Br. PVD	497
149	Finox Br. Nickel	400	246	Gold PVD	580
187	Aged Bronze	497	147	Chrome Br.	379
713	Antique Brass	497	720	Nickel PVD	467
030	Copper PVD	467	299	Matte Black	360
706	Black Metal PVD	467	845	Dark Bronze	497

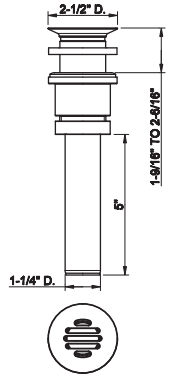

01314

Grille free-flow waste



031	Chrome	289

01781

Pop up drain assembly less pop up rod and knob



031	Chrome	102	735	Warm Bronze PVD	160
149	Finox Br. Nickel	137	726	Warm Bronze Br. PVD	170
187	Aged Bronze	170	710	Brass PVD	160
713	Antique Brass	170	727	Brass Br. PVD	170
030	Copper PVD	159	246	Gold PVD	180
706	Black Metal PVD	159	720	Nickel PVD	159
708	Copper Br. PVD	170	299	Matte Black	137
707	Black Metal Br. PVD	170			

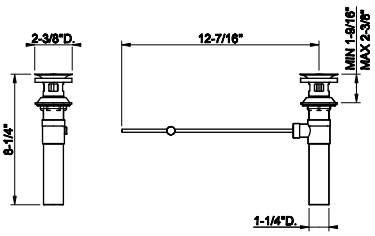

01005

1 1/4” syphon



031	Chrome	321	726	Warm Bronze Br. PVD	540
149	Finox Br. Nickel	434	710	Brass PVD	508
187	Aged Bronze	540	727	Brass Br. PVD	540
713	Antique Brass	540	246	Gold PVD	572
030	Copper PVD	508	147	Chrome Br.	434
706	Black Metal PVD	508	720	Nickel PVD	508
708	Copper Br. PVD	540	279	Matte White	434
707	Black Metal Br. PVD	540	299	Matte Black	434
735	Warm Bronze PVD	508	845	Dark Bronze	540

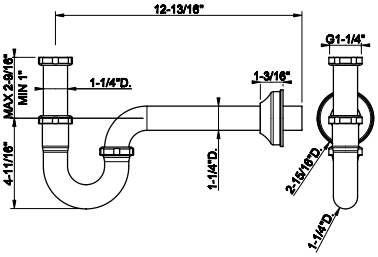

GESSI®

IN WALL ROUGH VALVES EXTENSIONS

ROUGH PART	TRIM PART	SERIES	L1 Extension kit (range)	L2 Extension kit (range)
09270	-	ALL	R4475 (0 - 1")	R4476 (1" - 2")
09272	-	-	SP04859 (0 - 2")	
09274	-	-	SP04860 (0 - 2")	
09279	-	ALL	R4475 (0 - 1")	R4476 (1" - 2")
32985 - 32987	-	-	R3153 (0 - 1")	R3154 (1" - 2")
35287	-	-	29543 (0 - 1")	29544 (1" - 2")
35344	-	-	09298 (0 - 1")	09299 (1" - 2")
38379	24969	EMPORIO	-	-
39601	-	ALL	43130 (0 - 1")	43150 (1" - 2")
39681	-	ALL	43134 (0 - 1")	43154 (1" - 2")
39683	-	ALL	43132 (0 - 1")	43152 (1" - 2")
39693	External parts with single backplate	ALL (excepted for GESSI316)	43122 (0 - 1")	43142 (1" - 2")
		GESSI316	SP01517 (0 - 1")	SP01518 (1" - 2")
	External parts with separate backplates	ALL (excepted for GESSI316)	43123 (0 - 1")	43143 (1" - 2")
		GESSI316	SP01505 (0 - 1")	SP01506 (1" - 2")
39695	External parts with single backplate	ALL (excepted for GESSI316)	43124 (0 - 1")	43144 (1" - 2")
		GESSI316	SP01517 (0 - 1")	SP01518 (1" - 2")
	External parts with separate backplates	ALL (excepted for GESSI316)	43125 (0 - 1")	43145 (1" - 2")
		GESSI316	SP01507 (0 - 1")	SP01508 (1" - 2")
39699	External parts with single backplate	ALL (excepted for GESSI316)	43128 (0 - 1")	43148 (1" - 2")
		GESSI316	SP01519 (0 - 1")	SP01520 (1" - 2")
	External parts with separate backplates	ALL (excepted for GESSI316)	43129 (0 - 1")	43149 (1" - 2")
		GESSI316	SP01511 (0 - 1")	SP01512 (1" - 2")
44665	-	Wall-mounted spouts (GESSI316/ INCISO)	R4190 (0 - 1")	R4191 (1" - 2")

ROUGH PART	TRIM PART	SERIES	L1 Extension kit (range)	L2 Extension kit (range)
44679	-	(RILIEVO/RETTAN-GOLO)	SP02809 (0 - 1")	SP02810 (1" - 2")
	-	Wall-mounted electronic separate control	SP02811 (0 - 1")	SP02812 (1" - 2")
	-	Ceiling-mounted washbasin spout only	SP02813 (0 - 1")	SP02814 (1" - 2")
44697	-	-	R4192 (0 - 1")	R4193 (1" - 2")
48089	-	ALL (excepted for GESSI316/INCISO)	R4335 (0 - 1")	R4336 (1" - 2")
	-	GESSI316	SP01503 (0 - 1")	SP01504 (1" - 2")
	-	INCISO	SP02209 (0 - 1")	SP02210 (1" - 2")
48112	-	-	R4452 (0 - 1")	R4453 (1" - 2")
48189	-	-	-	-
54139	-	-	SP01494 (0 - 1")	MFS > 1"
54169	-	-	SP01498 (0 - 1")	SP01499 (1" - 2")
54055	-	ORIGINI - HABITO - VENTI20 - ANELLO - INGRANAGGIO - INCISO - GESSI316	SP01500 (0 - 1")	MFS > 1"
54197	-	GESSI316	SP01492 (0 - 1")	-
63001 - 63011 - 63013 - 63015	-	HI-FI	SP02796 (0 - 1")	SP02797 (1" - 2")
63021 - 63023 - 63025	-	HI-FI	SP02787 (0 - 1")	SP02788 (1" - 2")
63397	-	-	SP03219 (0 - 1")	-
63412	-	-	SP03220 (0 - 1")	-
65099	-	-	MFS	-

RIR4475

0 - 1” height extension

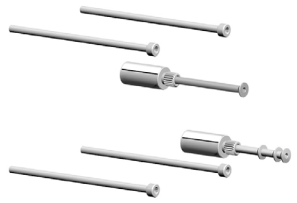

031	Chrome	143

RIR4476

1” - 2” height extension

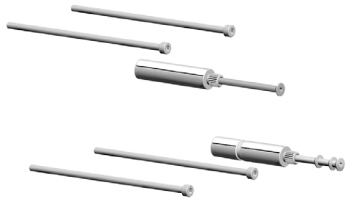

031	Chrome	156

SP04859

0 - 2” height extension

031	Chrome	258	726	Warm Bronze Br. PVD	435
149	Finox Br. Nickel	350	710	Brass PVD	408
187	Aged Bronze	435	727	Brass Br. PVD	435
713	Antique Brass	435	720	Nickel PVD	408
030	Copper PVD	408	147	Chrome Br.	350
706	Black Metal PVD	408	279	Matte White	350
708	Copper Br. PVD	435	299	Matte Black	350
707	Black Metal Br. PVD	435	845	Dark Bronze	435
735	Warm Bronze PVD	408			

SP04860

0 - 2” height extension

031	Chrome	335	726	Warm Bronze Br. PVD	565
149	Finox Br. Nickel	452	710	Brass PVD	531
187	Aged Bronze	565	727	Brass Br. PVD	565
713	Antique Brass	565	720	Nickel PVD	531
030	Copper PVD	531	147	Chrome Br.	452
706	Black Metal PVD	531	279	Matte White	452
708	Copper Br. PVD	565	299	Matte Black	452
707	Black Metal Br. PVD	565	845	Dark Bronze	565
735	Warm Bronze PVD	531			

09251

0 - 1” height extension



031	Chrome	207

09281

1” - 2” height extension



031	Chrome	230

RI29535

0 - 1” height extension



031	Chrome	296

RI29536

1” - 2” height extension



031	Chrome	371

RIR3153

0-1/2” height extension



031	Chrome	230

RIR3154

1/2”-1” height extension



031	Chrome	263

RI29543

0 - 1” height extension



031	Chrome	136

RI29544

1” - 2” height extension



031	Chrome	153

RI09298

0 - 1” height extension

031 Chrome 233

RI09299

1” - 2” height extension

031 Chrome 263

43130

0 - 1” height extension

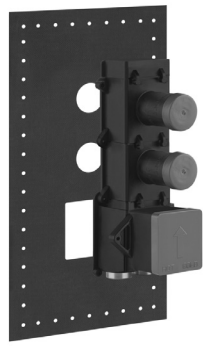

031 Chrome 268

RI43150

1” - 2” height extension

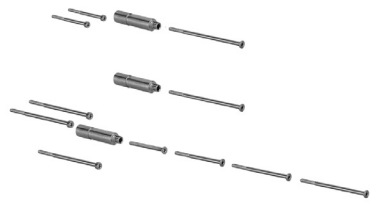

031 Chrome 275

RI43134

0 - 1” height extension



031	Chrome	138

RI43154

1” - 2” height extension



031	Chrome	145

RI43132

0 - 1” height extension



031	Chrome	233

RI43152

1” - 2” height extension



031	Chrome	248

RI43120

0 - 1” height extension



031	Chrome	286

RI43140

1” - 2” height extension



031	Chrome	326

RI43121

0 - 1” height extension

031	Chrome	333

RI43141

1” - 2” height extension



031	Chrome	326

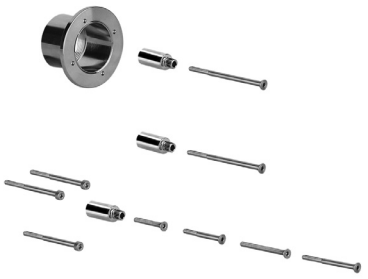

RI43122

0 - 1” height extension

031	Chrome	333



RI43142

1” - 2” height extension

031	Chrome	360

SP01517

0 - 1” height extension

239	Steel Br.	437

SP01518

1” - 2” height extension

239	Steel Br.	437

RI43123

0 - 1” height extension



031	Chrome	463

RI43143

1” - 2” height extension



031	Chrome	490

SP01505

0 - 1” height extension

239	Steel Br.	437

SP01506

1” - 2” height extension

239	Steel Br.	437



RI43124

0 - 1” height extension

031	Chrome	383



RI43144

1” - 2” height extension

031	Chrome	408



RI43125

0 - 1” height extension

031	Chrome	635

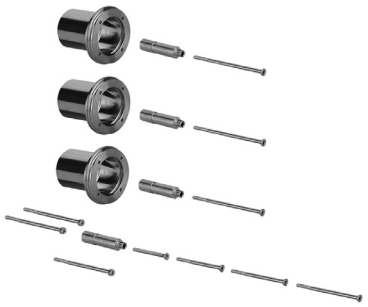

RI43145

1” - 2” height extension

031	Chrome	659

SP01507

0 - 1” height extension

239	Steel Br.	495

SP01508

1” - 2” height extension

239	Steel Br.	495

RI43128

0 - 1” height extension

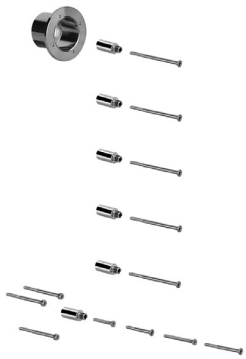

031	Chrome	480

RI43148

1” - 2” height extension

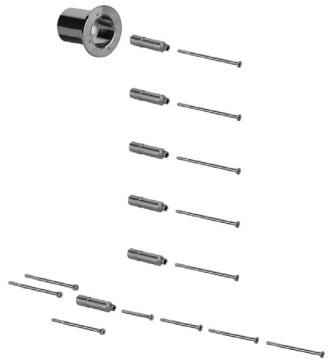

031	Chrome	510

SP01519

0 - 1” height extension

239	Steel Br.	495

SP01520

1” - 2” height extension

239	Steel Br.	495



RI43129

0 - 1” height extension

031	Chrome	969

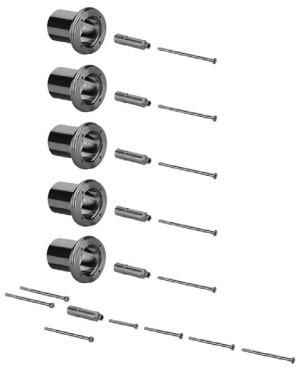

RI43149

1” - 2” height extension

031	Chrome	1.004

SP01511

0 - 1” height extension

239	Steel Br.	612

SP01512

1” - 2” height extension

239	Steel Br.	612

SP02807

0 - 1” height extension

031	Chrome	398

SP02808

1” - 2” height extension

031	Chrome	482

SP02809

0 - 1” height extension

031	Chrome	158

SP02810

1” - 2” height extension

031	Chrome	218

SP02811

0 - 1” height extension

031	Chrome	216

SP02812

1” - 2” height extension

031	Chrome	275

SP02813

0 - 1” height extension

031	Chrome	216

SP02814

1” - 2” height extension

031	Chrome	275

RIR4192

0 - 1” height extension

031	Chrome	333

RIR4193

1” - 2” height extension

031	Chrome	365

RIR4335

0 - 1” height extension

031	Chrome	531

RIR4336

1” - 2” height extension

031	Chrome	550

SP01503

0 - 1” height extension

239	Steel Br.	552

SP01504

1” - 2” height extension

239	Steel Br.	582

SP02209

0 - 1” height extension

031	Chrome	358

SP02210

1” - 2” height extension

031	Chrome	416

RIR4452

0 - 1” height extension

031	Chrome	153

RIR4453

1” - 2” height extension

031	Chrome	228

SP01500

0 - 1” height extension

239 Steel Br. 263

SP01494

0 - 1” height extension

239 Steel Br. 640

SP01498

0 - 1” height extension

239 Steel Br. 437

SP01499

1” - 2” height extension

239 Steel Br. 465

SP01492

0 - 1” height extension

239	Steel Br.	350

SP02796

0 - 1” height extension

031	Chrome	271

SP02797

1” - 2” height extension

031	Chrome	375

SP02787

0 - 1” height extension

031	Chrome	375

SP02788

1” - 2” height extension

031	Chrome	495

SP02801

0 - 1” height extension

031	Chrome	378

SP02802

1” - 2” height extension

031	Chrome	482

GESSI®

IN WALL ROUGH VALVES EXTENSIONS

GESSI

ROUGH PART	TRIM PART	SERIES	L1 Extension kit (range)	L2 Extension kit (range)
09270	-	ALL	R4475 (0 - 1")	-
09272	-	-	R3675 (0 - 40 mm)	
09274	-	-	R3676 (0 - 40 mm)	
09279	-	ALL	R4475 (0 - 1")	R4476 (1" - 2")
24996	-	Goccia	-	-
26589	-	Rettangolo	-	-
26612	-	ALL (excepted for Mimì)	09251 (0 - 1")	-
26697	-		29531 (0 - 1")	-
26812	-	ALL (excepted for Mimì)	29535 (0 - 1")	-
26912	-	-	09251 (0 - 1")	-
32985 - 32987	-	-	R3153 (0 - 12 mm)	-
35287	-	-	29543 (0 - 20 mm)	-
35344	-	-	09298 (0 - 20 mm)	-
38379	24969	EMPORIO	-	-
39601	-	ALL	43130 (0 - 1")	-
39681	-	ALL	43134 (0 - 1")	-
39683	-	ALL	43132 (0 - 1")	-
39691	External parts with single backplate	ALL	43120 (0 - 1")	-
	External parts with separate backplates	ALL	43121 (0 - 1")	-
39693	External parts with single backplate	ALL (excepted for GESSI316)	43122 (0 - 1")	-
		GESSI316	SP01517 (0 - 1”)	
	External parts with separate backplates	ALL (excepted for GESSI316)	43123 (0 - 1")	-
		GESSI316	SP01505 (0 - 1")	-

ROUGH PART	TRIM PART	SERIES	L1 Extension kit (range)	L2 Extension kit (range)
39695	External parts with single backplate	ALL (excepted for GESSI316)	43124 (0 - 1")	43144 (1” - 2”)
		GESSI316	SP01517 (0 - 1")	SP01518 (1” - 2”)
	External parts with separate backplates	ALL (excepted for GESSI316)	43125 (0 - 1")	43145 (1" - 2")
		GESSI316	SP01507 (0 - 1")	SP01508 (1" - 2")
39699	External parts with single backplate	ALL (excepted for GESSI316)	43128 (0 - 1")	43148 (1" - 2")
		GESSI316	SP01519 (0 - 1")	SP01520 (1" - 2")
	External parts with separate backplates	ALL (excepted for GESSI316)	43129 (0 - 1")	43149 (1" - 2")
		GESSI316	SP01511 (0 - 1")	SP01512 (1" - 2")
44665	-	Wall-mounted spouts (Gessi316/Inciso)	SP02807 (0 - 1”)	SP02808 (1” - 2”)
44679	-	Wall-mounted spouts	SP02807 (0 - 1")	SP02808 (1" - 2")
	-	(Rilievo/Rettangolo)	SP02809 (0 - 1")	R2810 (1" - 2")
	-	Wall-mounted electronic separate control	SP02811 (0 - 1")	R2812 (1" - 2")
	-	Ceiling-mounted washbasin spout only	SP02813 (0 - 1")	R2814 (1" - 2")
44697	-	-	R4192 (0 - 1”)	R4193 (1” - 2”)
45089	-	ALL (excepted for GESSI316 and INCISO)	R4335 (0 - 1”)	R4336 (1" - 2")
	-	GESSI316	SP01503 (0 - 1")	SP01504 (1" - 2")
	-	INCISO	SP02209 (0 - 1")	SP02210 (1" - 2")
48112	-	-	R4452 (0 - 1”)	R4453 (1” - 2”)
48189	-	-	-	
53112	-	-	SP01500 (0 - 35 mm)	-
54139	-	-	SP01494 (0 - 35 mm)	-
54169	-	-	SP01498 (0 - 1")	SP01499 (1" - 2")

ROUGH PART	TRIM PART	SERIES	L1 Extension kit (range)	L2 Extension kit (range)
54197 - 54198	-	GESSI316	SP01492 (0 - 35 mm)	-
58099	-	INCISO	-	
63001 - 63011 - 63013 - 63015 - 63017	-	Hi-Fi	SP02796 (0 - 1")	SP02797 (1" - 2")
63021 - 63023 - 63025 - 63027	-	Hi-Fi	SP02787 (0 - 1")	SP02788 (1" - 2")
63055	-	Hi-Fi	SP02801 (0 - 1")	SP02802 (1" - 2")
66236	-	ORIGINI	SP01503 (0 - 1”)	SP01504 (1” - 2”)

GESSI®

CARTRIDGES

GESSI®

Code	Cartridge	Ceramic valve cartridge
11955	SP01233	-
11957	SP00833	-
11959	SP01411	-
11971	SP01233	-
11977	SP01233	-
11979	SP00833	-
11999	SP00013	-
13804	SP00013	-
20007	SP01233	-
20488	-	SP00129 (2 pcs)
20607	SP00833	-
20688	SP00833	-
23007	SP01233	-
24944	SP00013	-
24948	SP00013	-
24984	SP00013	-
24994	SP00076	-
26501	SP01233	-
26505	SP01233	-
26537	SP00013	-
26539	SP00013	-
26543	SP00013	-
26547	SP00013	-
26612	SP00013	-
26667	-	28897
26697	SP00013	-
26701	SP00833	-
26705	SP00833	-
26801	SP01411	-
26805	SP01411	-
26812	SP00833	-
26837	SP00013	-

Code	Cartridge	Ceramic valve cartridge
26843	SP00013	-
26897	SP00013	-
26912	SP00013	-
26939	28896	-
26965	-	28897
27037	-	SP00809 (2pcs)
27043	-	SP00129 (2pcs)
27050	-	SP00809 (2pcs)
27102	-	SP00809 (2pcs)
27103	-	SP00809 (2pcs)
27105	-	SP00809 (2pcs)
27106	-	SP00809 (2pcs)
27108	-	SP00809 (2pcs)
27163	-	28897
27201	SP00833	-
27203	SP00833	-
27211	SP00833	-
27405	SP01184	29065
27431	SP01184	29065
27435	SP01184	29065
27463	SP01184	29065
27535	SP01184	29152
27685	-	SP00809 (2pcs)
27701	-	SP00809 (2pcs)
27702	-	SP00809 (2pcs)
27737	-	SP00129 (2pcs)
30986	SP00833	-
30988	SP00833	-
30992	SP00833	-
30994	SP00833	-
31107	SP01233	-
34637	SP00013	-

Code	Cartridge	Ceramic valve cartridge
36501	SP01233	-
36505	SP01233	-
36511	-	01125 left
36511	-	29076 right
36537	SP00013	-
36587	SP01233	-
36588	SP01233	-
36589	SP01233	-
36590	SP01233	-
39581	SP01936	-
39583	SP01936	-
39591	SP01936	28897 (1pcs)
39593	SP01936	28897 (2pcs)
39595	SP01936	28897 (3pcs)
39599	SP01936	28897 (4pcs)
20496+30987	SP00833	-
20496+30993	SP00833	-
39597	SP01936	28897 (1pcs)
39693	SP01936	28897 (2pcs)
39695	SP01936	SP01934 (3pcs)
39699	SP01936	28897 (4pcs)
39601	SP01936	28897 (1pcs)
27546	SP01184	-
39810+39802	SP01936	R2808
39810+39808	SP01936	R2808
39810+39821	SP01936	R2808
39820+39804	SP01936	R2808
39820+39818	SP01936	R2808
39820+39822	SP01936	R2808
24980	SP01936	01129
09274	-	-
19710	SP00013	-

Code	Cartridge	Ceramic valve cartridge
20183	-	-
20204	-	-
20210	-	-
24943	SP00076	-
24961	SP00013	-
24980	-	SP01934
24982	SP00076	-
26612	SP00013	-
26697	SP00013	-
33744	SP02255	-
33842	-	-
33844	-	-
33846	-	-
35284	SP02255	-
35286	SP02255	-
38793	-	-
38798	-	-
38799	-	-
39601	-	SP01934
39681	-	-
39683	-	SP01934
39691	-	-
39693	-	SP01934 (2 pcs)
39695	-	SP01934 (3 pcs)
39699	-	SP01934 (4 pcs)
44679	-	-
48089	-	SP00810 (Cold)
	-	SP00809 (Hot)
53084	SP00013	-
53088	SP00013	-
53109	SP00013	-
53112	SP00013	-

GESSI

Code	Cartridge	Ceramic valve cartridge
53129	SP00013	-
53136	SP00013	-
54028	SP01210 (Diverter)	-
	SP01605 (Mixer)	-
54032	-	-
54034	-	-
54036	-	-
54055	SP00013	-
54139	SP00013	-
54197	SP00013	-
54232	-	-
54234	-	-
58029	-	SP02291 (Cold)
	-	SP01934 (Hot)
58129	-	SP02291 (Cold)
	-	SP01934 (Hot)
58132	-	-
58134	-	-
58136	-	-
58232	-	-
58234	-	-
58236	-	-
59092	SP00013	-
59131	SP00076	-
59132	-	-
59134	-	-
59136	-	-
63002	-	SP02843
63004	-	SP02843
63006	-	SP02843
63012	-	SP02843

Code	Cartridge	Ceramic valve cartridge
63014	-	SP02843
63016	-	SP02843
63022	-	SP02843
63024	-	SP02843
63026	-	SP02843
63204	-	-
63328	SP01605	-
63331	-	-
63332	-	-
63333	-	-
63334	-	-
63335	-	-
63336	-	-
63341	-	-
63342	-	-
63397	SP01277	-
63412	SP01277	-
63528	SP01605	-
63541	-	-
63542	-	-
65128	-	SP01934 (Cold)
	-	SP02291 (Hot)
65133	-	-
65135	-	-
65137	-	-
65222	-	SP02843
65224	-	SP02843
65226	-	SP02843
65232	-	SP02843
65234	-	SP02843

GENERAL TERMS AND CONDITIONS OF SALE

TECHNICAL PRESCRIPTIONS:

1) in order to guarantee a long-lasting performance of the product we recommend to install angle valves with filter, which must be regularly cleaned;
2) you should not install the product in presence of water pressure higher than 5 bar: in case of higher pressure, it is recommended to use a pressure reducer (In the case, use a demonstrable pressure reducer that complies with local requirements);
3) Testing suitable for local requirements with a maximum pressure of 12 bar;
4) water temperature should not be higher than 70°C;
5) carry out the rinsing of the pipes before installing the tap; before installing the product, have proof that the inlet water pipes are cleaned according to local regulations in force.
6) regarding the installation follow the assembly instructions enclosed with the product;
7) do not connect the earthing of an electric installation to a flexible hose or to another water pipeline;
8) close the plant in case of an extended absence of more than twenty-four hours.

The company has the right to invalidate the warranty when the above mentioned conditions will not be obeyed, checked by a technician of GESSI S.p.A.

The company GESSI S.p.A. can issue only any modifications at this warranty through a proper written declaration. Furthermore, the warranty will not be valid in case of missing documentation which proves the date of purchase.

Possible product damages a/o defects will be replaced under warranty only if the related item of complaint is send back to GESSI S.p.A. in the original packaging including the proof of purchase. The warranty is valid in all the countries, excluded USA and Canada, where the product has been supplied by GESSI S.p.A. or by its authorized distributor. The costs for the assembling and the disassembling of the product, the travelling and the technical interventions by the skilled staff, as well as the burden undergone by the customer due to the indisposition a/o the suspension of the product use are in any case excluded from the warranty. Possible imperfections at the finishing and at the raw materials, are not defects, but features of the product due to the handmade production.

MAINTENANCE: GESSI S.p.A. PRODUCT CLEANING INSTRUCTIONS

GESSI S.p.A. products are manufactured in different materials to suit all market, design and functionality needs. The surfaces of the products manufactured by GESSI S.p.A., for both indoor and outdoor environments, are obtained using the best materials and approved production processes and they are constantly enhanced by advanced quality certification methods.
The resistance and durability of all the types of material mentioned above are closely linked to proper use, good maintenance and the use of suitable cleaning materials and products that preserve the original characteristics. Therefore, the appearance of spots of rust or limescale deposits are clear indications of incorrect or lack of cleaning and not the result of defects and/or poor quality of the materials used.

Therefore, in order to fully appreciate your Gessi product and preserve its aesthetic quality, consider the following:

- The pollutants found in rainwater or the limescale in mains water remain in the form of stains on the surface of the product once the water has evaporated. It is possible to prevent the formation of deposits and keep your product clean by always drying it with a soft cloth.
- DETERGENTS, SOLVENTS, CHEMICAL AGENTS, ABRASIVE SPONGES, WIRE WOOL, ALCOHOL, PRODUCTS CONTAINING CHLORINE AND ITS DERIVATIVES, ETC. MUST NOT BE USED as these may irreparably damage the product surfaces, thus compromising their aesthetic qualities, brightness and satin finish. REGULARLY CLEAN THE PRODUCT WITH ONLY WATER AND A NEUTRAL SOAP, WIPING IT DRY WITH A SOFT DISPOSABLE CLOTH.
- Regularly clean the filters upstream of the product, in addition to those mentioned above, after having disassembled them and removed the limescale obstructing the outlets. Regularly clean the distribution points too, for example by slightly rubbing the distribution nozzles so as to free them of any limescale and keep the diffuser clean.
- When using spray-on soap, spray it onto a clean cloth or sponge, NEVER directly on the product.

CLEANING GUIDELINES - FINISHES
LINEE GUIDA PER LA PULIZIA – FINITURE

(*) **SPECIFIC GLASS CLEANER**: use on low dirt. Spray the product on a sponge or cloth and wipe the surface. Dry accurately.
MULTIFOAM: use to remove grease and fingerprints. Spray on a cloth, wipe the surface and dry thoroughly
ETHYL ALCOHOL: suitable for removing grease residues or persistent dirt. Wet the cloth with a little amount of it, wipe the surface and dry accurately
ISOPROPYL ALCOHOL: indicated for removing grease residues. Put a little product on a cloth, wipe the surface and dry very well.
UNIPOL (WARNING: THIS ABRASIVE PASTE MAY SCRATCH THE FINISH): use to remove chrome stains, and polish steel surfaces. Put it on a cloth, wipe the surface, then wipe with a cloth soaked with specific glass cleaner and dry properly.

(**) **WHITE SPONGE:** Suitable for cleaning lightly persistent dirt. Wipe the sponge over the surface. CAUTION: CLAN SOFTLY
MICROFIBRE CLOTH: Suitable for removing dust. CAUTION: BEFORE WIPING, CHECK THERE ARE NO RESIDUES THAT COULD SCRATCH THE SURFACE.
PAPER CLOTH: Suitable for removing dust. It can also be sprayed with cleaning products (do NOT spray such products directly on the surface). CAUTION: BEFORE WIPING, CHECK THAT THERE ARE NO RESIDUES THAT COULD SCRATCH THE SURFACE.

(***) AFTER CLEANING WITH WATER, **DRY EACH SURFACE IMMEDIATELY** TO PREVENT THE APPEARANCE OF LIMESCALE STAINS. THE USE OF DEIONIZED WATER WILL PREVENT THE FORMATION OF SUCH STAINS. CLEAN THE SURFACES FREQUENTLY TO AVOID EXCESSIVE DIRT OR FINGERPRINTS AND TO MINIMIZE THE CLEANING EFFORT, COST AND THE RISK OF SCORING/ALTERING THE FINISH.

(****) **INSTRUCTIONS FOR STAINLESS STEEL SURFACES CLEANING:**
Brushed stainless steel may show fingerprints in the early stages of installation, but these will become less noticeable after the first few cleanings. The most effective products for removing fingerprints or other types of stains are water with soap or a mild detergent.
Stainless steel with a mirror finish can be cleaned with specific products usuallv used for cleaning glass: most importantiv. thev must not contain chlorides. Do not use abrasive products as they can leave irreparable scratches on stainless steel surfaces. Alternatively, to remove contamination, a specific stainless steel cleaning product containing phosphoric acid may be used, carefully rinsing with clean water and drying. It is advisable to treat the entire stainless steel surface to avoid stains.
Traces of mortar and cement can be treated with a solution containing a small amount of phosphoric acid. Rinse with water (preferably deionized water to reduce the risk of leaving stains) and dry. Never use any type of product specifically designed for mortar removal or diluted hydrochloric acid: if these are accidentally used or spilled on stainless steel, rinse thoroughly with clean water.

DO NOT USE PRODUCTS CONTAINING CHLORIDE (ESPECIALLY CHLORIDRIC ACID), HYPOCHLORIC ACID CANDYGINS, OR PRODUCTS USED TO CLAN SILVER. If accidentally spilled on any stainless steel surface, rinse thoroughly.
To remove light dirt or fingerprints, use a damp cloth or suede leather; for more persistent dirt, nylon sponges are recommended.

DO NOT USE ABRASIVE WOOL PADS AND NON-INOX WOOL PADS: in addition to scratching, they can leave carbon steel deposits that, in the presence of humidity, could result in rust stains.
On polished finishes with a unidirectional surface texture, cleaning should be done with movements that follow the direction of the finish, not across it. To avoid contamination by iron particles, it is necessary to ensure that the cleaning tools chosen have not been previously used on carbon steel. In fact, materials for cleaning stainless steel workpieces must be reserved exclusively for this purpose.

CLEANING GUIDELINES - FINISHES
LINEE GUIDA PER LA PULIZIA – FINITURE

In case the instructions above (reported from Gessi standard warranty) have not been observed, it is exceptionally possible to follow the instructions in the table below / Nel caso in cui le istruzioni sopra riportate (riportate dalla garanzia standard Gessi) non siano state rispettate, è eccezionalmente possibile seguire le istruzioni riportate nella tabella sottostante.

GALVANIC FINISHES

FINISH FINITURA	PROPERTIES PROPRIETÀ	SUGGESTED PRODUCTS (*) PRODOTTI SUGGERITI (*)	PRODUCTS TO AVOID PRODOTTI DA EVITARE	CLEANING TOOLS AND CLOTHS (**) STRUMENTI E PANNI PER LA PULIZIA (**)	MAINTENANCE (***) MANUTENZIONE (***)	WARNINGS ACCORTEZZE
031 CHROME (G001)	Fingerprint proof, scratchproof,high resistance, easy to clean, corrosion resistant / A prova di impronte digitali, antigraffio, ad alta resistenza, facile da pulire, resistente alla corrosione	Ethyl alcohol, specific glass cleaner, multifoam, isopropyl alcohol / Alcool etilico, detergente specifico per vetri, schiuma multi azione, alcool isopropilico	Solvent / Solventi	White sponge, microfibre cloth, paper cloth / Spugna bianca, panno in microfibra, panno di carta	In order to prevent limescale stains, clean and dry the product properly with a soft cloth **right after each use**. In case of limescale stains, apply a solution of vinegar and water, then rinse and accurately dry with a cloth / Per evitare la formazione di macchie di calcare, pulire e asciugare accuratamente il prodotto con un panno morbido **subito dopo ogni utilizzo**. In caso di macchie di calcare, applicare una soluzione di acqua e aceto. Poi risciacquare e asciugare accuratamente con un panno	Do not mix different cleaning products together: such products, if mixed, could cause chemical reactions that could damage the finish / Non mescolare prodotti per la pulizia diversi tra loro: tali prodotti, se mescolati, potrebbero provocare reazioni chimiche che potrebbero danneggiare la finitura
147 BRUSHED CHROME (G006)	Scratchproof, high resistance, easy to clean, corrosion resistant / Antigraffio, ad alta resistenza, facile da pulire, resistente alla corrosione	Ethyl alcohol, specific glass cleaner, multifoam, isopropyl alcohol / Alcool etilico, detergente specifico per vetri, schiuma multi azione, alcool isopropilico	Solvent, unipol (paste) / Solvente, unipol (pasta)	White sponge, microfibre cloth, paper cloth / Spugna bianca, panno in microfibra, panno di carta		Perform the cleaning in the direction of brushing. Otherwise, the finish may be scratched. Do not mix different cleaning products together: such products, if mixed, could cause chemical reactions that could damage the finish / Pulire nel senso della spazzolatura. In caso contrario, la finitura potrebbe graffiarsi. Non mescolare prodotti per la pulizia diversi tra loro: tali prodotti, se mescolati, potrebbero provocare reazioni chimiche che potrebbero danneggiare la finitura
149 FINOX BRUSHED NICKEL (G002)	Scratchproof, easy to clean / Antigraffio, facile da pulire	Ethyl alcohol, specific glass cleaner, multifoam, isopropyl alcohol / Alcool etilico, detergente specifico per vetri, schiuma multi azione, alcool isopropilico	Solvent, unipol (paste) / Solvente, unipol (pasta)	White sponge, microfibre cloth, paper cloth / Spugna bianca, panno in microfibra, panno di carta		
080 GOLD CCP (G008)	Easy to clean / Facile da pulire	Ethyl alcohol, specific glass cleaner, multifoam, isopropyl alcohol / Alcool etilico, detergente specifico per vetri, schiuma multi azione, alcool isopropilico	Unipol (paste), solvent, bleach, chlorine products / Unipol (pasta), candeggina, prodotti a base di cloro	White sponge / Spugna bianca		Do not mix different cleaning products together: such products, if mixed, could cause chemical reactions that could damage the finish / Non mescolare prodotti per la pulizia diversi tra loro: tali prodotti, se mescolati, potrebbero provocare reazioni chimiche che potrebbero danneggiare la finitura
087 GOLD BRUSHED CCP (G010)	Easy to clean / Facile da pulire	Ethyl alcohol, specific glass cleaner, multifoam, isopropyl alcohol / Alcool etilico, detergente specifico per vetri, schiuma multi azione, alcool isopropilico	Unipol (paste), solvent, bleach, chlorine products / Unipol (pasta), candeggina, prodotti a base di cloro	White sponge / Spugna bianca		Perform the cleaning in the direction of brushing. Otherwise, the finish may be scratched. Do not mix different cleaning products together: such products, if mixed, could cause chemical reactions that could damage the finish / Pulire nel senso della spazzolatura. In caso contrario, la finitura potrebbe graffiarsi. Non mescolare prodotti per la pulizia diversi tra loro: tali prodotti, se mescolati, potrebbero provocare reazioni chimiche che potrebbero danneggiare la finitura
238 MIRROR STEEL (A001) STAINLESS STEEL (****)	Fingerprint proof, high resistance, easy to clean, corrosion resistant Stainless Steel / A prova di impronte digitali, ad alta resistenza, facile da pulire, Stailess Steel resistente alla corrosione	Specific glass cleaner, multifoam, isopropyl alcohol / Detergente specifico per vetri, schiuma multi azione, alcool isopropilico	Solvent, chloride products, bleach, silver cleaning products / Solventi, candeggina, prodotti a base di cloro, prodotti per la pulizia dell'argento	White sponge, suede cloth, nylon sponge (for persistent dirt) / Spugna bianca, panno scamosciato, spugna di nylon (per sporco persistente)		**Do not use steel wool pads.** perform the cleaning in the direction of brushing. Otherwise, the finish may be scratched. do not mix different cleaning products together: such products, if mixed, could cause chemical reactions that could damage the finish / **Non usare pagliette in acciaio.** Pulire nel senso della spazzolatura. In caso contrario, la finitura potrebbe graffiarsi. Non mescolare prodotti per la pulizia diversi tra loro: tali prodotti, se mescolati, potrebbero provocare reazioni chimiche che potrebbero danneggiare
239 STEEL BRUSHED (A000) - STAINLESS STEEL (****)	Fingerprint proof, scratchproof, high resistance, easy to clean, corrosion resistant Stainless Steel / A prova di impronte digitali, antigraffio, ad alta resistenza, facile da pulire, Stailess Steel resistente alla corrosione	Specific glass cleaner, multifoam, isopropyl alcohol / Detergente specifico per vetri, schiuma multi azione, alcool isopropilico	Solvent, chloride products, bleach, silver cleaning products / Solventi, candeggina, prodotti a base di cloro, prodotti per la pulizia dell'argento	White sponge, suede cloth, nylon sponge (for persistent dirt) / Spugna bianca, panno scamosciato, spugna di nylon (per sporco persistente)		

CLEANING GUIDELINES - FINISHES
LINEE GUIDA PER LA PULIZIA – FINITURE

GESSI®

VARNISHED FINISHES

FINISH FINITURA	PROPERTIES PROPRIETÀ	SUGGESTED PRODUCTS (*) PRODOTTI SUGGERITI (*)	PRODUCTS TO AVOID PRODOTTI DA EVITARE	CLEANING TOOLS AND CLOTHS (**) STRUMENTI E PANNI PER LA PULIZIA (**)	MAINTENANCE (***) MANUTENZIONE (***)	WARNINGS ACCORTEZZE
299 **BLACK MATTE** **(C072)**	Fingerprint proof, corrosion resistant, easy to clean / A prova di impronte digitali, resistente alla corrosione, facile da pulire	Specific glass cleaner, multifoam, liquid soap diluted with water, isopropyl alcohol / Detergente specifico per vetri, schiuma multi azione, sapone liquido diluito con acqua, alcool isopropilico	Ethyl alcohol, degreaser, limescale remover, unipol (paste), solvent, bleach, chlorine products / Alcol etilico, sgrassatore, detergente anticalcare, unipol (pasta), solventi, candeggina, prodotti a base di cloro	White sponge, microfibre cloth, paper cloth / Spugna bianca, panno in microfibra, panno di carta	In order to prevent limescale stains, clean and dry the product properly with a soft cloth **right after each use**. In case of limescale stains, apply a solution of vinegar and water, then rinse and accurately dry with a cloth / Per evitare la formazione di macchie di calcare, pulire e asciugare accuratamente il prodotto con un panno morbido **subito dopo ogni utilizzo**. In caso di macchie di calcare, applicare una soluzione di acqua e aceto. Poi risciacquare e asciugare accuratamente con un panno	Do not mix different cleaning products together: such products, if mixed, could cause chemical reactions that could damage the finish / Non mescolare prodotti per la pulizia diversi tra loro: tali prodotti, se mescolati, potrebbero provocare reazioni chimiche che potrebbero danneggiare la finitura
279 **WHITE MATTE** **(C071)**	Fingerprint proof, corrosion resistant, easy to clean / A prova di impronte digitali, resistente alla corrosione, facile da pulire	Specific glass cleaner, multifoam, liquid soap diluted with water, isopropyl alcohol / Detergente specifico per vetri, schiuma multi azione, sapone liquido diluito con acqua, alcool isopropilico	Ethyl alcohol, degreaser, limescale remover, unipol (paste), solvent, bleach, chlorine products / Alcol etilico, sgrassatore, detergente anticalcare, unipol (pasta), solventi, candeggina, prodotti a base di cloro	White sponge, microfibre cloth, paper cloth / Spugna bianca, panno in microfibra, panno di carta		
187 **AGED BRONZE** **(G052)**	Fingerprint proof, scratchproof, corrosion resistant, easy to clean / A prova di impronte digitali, antigraffio, resistente alla corrosione, facile da pulire	Specific glass cleaner, multifoam, liquid soap diluted with water, isopropyl alcohol / Detergente specifico per vetri, schiuma multi azione, sapone liquido diluito con acqua, alcool isopropilico	Ethyl alcohol, degreaser, limescale remover, unipol (paste), solvent, bleach, chlorine products / Alcol etilico, sgrassatore, detergente anticalcare, unipol (pasta), solventi, candeggina, prodotti a base di cloro	White sponge, microfibre cloth, paper cloth / Spugna bianca, panno in microfibra, panno di carta		
713 **ANTIQUE BRASS** **(V204)**	Fingerprint proof, scratchproof, corrosion resistant, easy to clean / A prova di impronte digitali, antigraffio, resistente alla corrosione, facile da pulire	Specific glass cleaner, multifoam, liquid soap diluted with water, isopropyl alcohol / Detergente specifico per vetri, schiuma multi azione, sapone liquido diluito con acqua, alcool isopropilico	Ethyl alcohol, degreaser, limescale remover, unipol (paste), solvent, bleach, chlorine products / Alcol etilico, sgrassatore, detergente anticalcare, unipol (pasta), solventi, candeggina, prodotti a base di cloro	White sponge, microfibre cloth, paper cloth / Spugna bianca, panno in microfibra, panno di carta		
856 **CORTEN** **(T091)**	Fingerprint proof, scratchproof, high resistance, easy to clean, corrosion resistant / A prova di impronte digitali, antigraffio, ad alta resistenza, facile da pulire, resistente alla corrosione	Specific glass cleaner, multifoam, liquid soap diluted with water, isopropyl alcohol / Detergente specifico per vetri, schiuma multi azione, sapone liquido diluito con acqua, alcool isopropilico	Solvent / Solvente	White sponge, microfibre cloth, paper cloth / Spugna bianca, panno in microfibra, panno di carta		
845 **DARK BRONZE**	Fingerprint proof, scratchproof, corrosion resistant, easy to clean / A prova di impronte digitali, antigraffio, resistente alla corrosione, facile da pulire	Specific glass cleaner, multifoam, liquid soap diluted with water, isopropyl alcohol / Detergente specifico per vetri, schiuma multi azione, sapone liquido diluito con acqua, alcool isopropilico	Ethyl alcohol, degreaser, limescale remover, unipol (paste), solvent, bleach, chlorine products / Alcol etilico, sgrassatore, detergente anticalcare, unipol (pasta), solventi, candeggina, prodotti a base di cloro	White sponge, microfibre cloth, paper cloth / Spugna bianca, panno in microfibra, panno di carta		
275 **MATTE CIPRIA**	Fingerprint proof, corrosion resistant, easy to clean / A prova di impronte digitali, resistente alla corrosione, facile da pulire	Specific glass cleaner, multifoam, liquid soap diluted with water, isopropyl alcohol / Detergente specifico per vetri, schiuma multi azione, sapone liquido diluito con acqua, alcool isopropilico	Ethyl alcohol, degreaser, limescale remover, unipol (paste), solvent, bleach, chlorine products / Alcol etilico, sgrassatore, detergente anticalcare, unipol (pasta), solventi, candeggina, prodotti a base di cloro	White sponge, microfibre cloth, paper cloth / Spugna bianca, panno in microfibra, panno di carta		
273 **MATTE GREIGE**	Fingerprint proof, corrosion resistant, easy to clean / A prova di impronte digitali, resistente alla corrosione, facile da pulire	Specific glass cleaner, multifoam, liquid soap diluted with water, isopropyl alcohol / Detergente specifico per vetri, schiuma multi azione, sapone liquido diluito con acqua, alcool isopropilico	Ethyl alcohol, degreaser, limescale remover, unipol (paste), solvent, bleach, chlorine products / Alcol etilico, sgrassatore, detergente anticalcare, unipol (pasta), solventi, candeggina, prodotti a base di cloro	White sponge, microfibre cloth, paper cloth / Spugna bianca, panno in microfibra, panno di carta		
276 **MATTE AGAVE**	Fingerprint proof, corrosion resistant, easy to clean / A prova di impronte digitali, resistente alla corrosione, facile da pulire	Specific glass cleaner, multifoam, liquid soap diluted with water, isopropyl alcohol / Detergente specifico per vetri, schiuma multi azione, sapone liquido diluito con acqua, alcool isopropilico	Ethyl alcohol, degreaser, limescale remover, unipol (paste), solvent, bleach, chlorine products / Alcol etilico, sgrassatore, detergente anticalcare, unipol (pasta), solventi, candeggina, prodotti a base di cloro	White sponge, microfibre cloth, paper cloth / Spugna bianca, panno in microfibra, panno di carta		
277 **GLOSSY OCRA**	Fingerprint proof, Corrosion resistant, Easy to clean / A prova di impronte digitali, resistente alla corrosione, facile da pulire	Specific glass cleaner / Detergente specifico per vetri	Ethyl alcohol, degreaser, isopropyl alcohol, multifoam, unipol (paste), white sponge / Alcool etilico, sgrassatore, alcool isopropilico, schiuma multifuzione, unipol (pasta), spugna bianca	Microfibre cloth, paper cloth / Panno in microfibra, panno di carta		Perform the cleaning very softly / Pulire molto delicatamente
278 **GLOSSY CORAL**	Fingerprint proof, Corrosion resistant, Easy to clean / A prova di impronte digitali, resistente alla corrosione, facile da pulire	Specific glass cleaner / Detergente specifico per vetri	Ethyl alcohol, degreaser, isopropyl alcohol, multifoam, unipol (paste), white sponge / Alcool etilico, sgrassatore, alcool isopropilico, schiuma multifuzione, unipol (pasta), spugna bianca	Microfibre cloth, paper cloth / Panno in microfibra, panno di carta		

CLEANING GUIDELINES - FINISHES
LINEE GUIDA PER LA PULIZIA – FINITURE

PVD FINISHES

FINISH FINITURA	PROPERTIES PROPRIETÀ	SUGGESTED PRODUCTS (*) PRODOTTI SUGGERITI (*)	PRODUCTS TO AVOID PRODOTTI DA EVITARE	CLEANING TOOLS AND CLOTHS (**) STRUMENTI E PANNI PER LA PULIZIA (**)	MAINTENANCE (***) MANUTENZIONE (***)	WARNINGS ACCORTEZZE
030 COPPER PVD (P000)	Scratchproof, high resistance / Antigraffio alta resistenza	Ethyl alcohol, specific glass cleaner, multifoam, isopropyl alcohol / Alcool etilico, detergente specifico per vetri, schiuma multi azione, alcool isopropilico	Unipol (paste), solvent, bleach, chlorine products / Unipol (pasta), candeggina, prodotti a base di cloro	White sponge, microfibre cloth, paper cloth / Spugna bianca, panno in microfibra, panno di carta	In order to prevent lime-scale stains, clean and dry the product properly with a soft cloth **right after each use**. In case of limescale stains, apply a solution of vinegar and water, then rinse and accurately dry with a cloth / Per evitare la formazione di macchie di calcare, pulire e asciugare accuratamente il prodotto con un panno morbido **subito dopo ogni utilizzo**. In caso di macchie di calcare, applicare una soluzione di acqua e aceto. Poi risciacquare e asciugare accuratamente con un panno	Do not mix different cleaning products together: such products, if mixed, could cause chemical reactions that could damage the finish / Non mescolare prodotti per la pulizia diversi tra loro: tali prodotti, se mescolati, potrebbero provocare reazioni chimiche che potrebbero danneggiare la finitura
708 COPPER BRUSHED PVD (P006)	Scratchproof, high resistance / Antigraffio alta resistenza	Ethyl alcohol, specific glass cleaner, multifoam, isopropyl alcohol / Alcool etilico, detergente specifico per vetri, schiuma multi azione, alcool isopropilico	Unipol, solvent, bleach, chlorine products / Unipol, candeggina, prodotti a base di cloro	White sponge, microfibre cloth, paper cloth / Spugna bianca, panno in microfibra, panno di carta		Perform the cleaning in the direction of brushing. Otherwise, the finish may be scratched. Do not mix different cleaning products together: such products, if mixed, could cause chemical reactions that could damage the finish / Pulire nel senso della spazzolatura. In caso contrario, la finitura potrebbe graffiarsi. Non mescolare prodotti per la pulizia diversi tra loro: tali prodotti, se mescolati, potrebbero provocare reazioni chimiche che potrebbero danneggiare la finitura
706 BLACK METAL PVD (P001)	Scratchproof, high resistance / Antigraffio alta resistenza	Ethyl alcohol, specific glass cleaner, multifoam, isopropyl alcohol / Alcool etilico, detergente specifico per vetri, schiuma multi azione, alcool isopropilico	Unipol, solvent, bleach, chlorine products / Unipol, candeggina, prodotti a base di cloro	White sponge, microfibre cloth, paper cloth / Spugna bianca, panno in microfibra, panno di carta		Do not mix different cleaning products together: such products, if mixed, could cause chemical reactions that could damage the finish / Non mescolare prodotti per la pulizia diversi tra loro: tali prodotti, se mescolati, potrebbero provocare reazioni chimiche che potrebbero danneggiare la finitura
707 BLACK METAL BRUSHED PVD (P004)	Scratchproof, high resistance / Antigraffio alta resistenza	Ethyl alcohol, specific glass cleaner, multifoam, isopropyl alcohol / Alcool etilico, detergente specifico per vetri, schiuma multi azione, alcool isopropilico	Unipol, solvent, bleach, chlorine products / Unipol, candeggina, prodotti a base di cloro	White sponge, microfibre cloth, paper cloth / Spugna bianca, panno in microfibra, panno di carta		Perform the cleaning in the direction of brushing. Otherwise, the finish may be scratched. Do not mix different cleaning products together: such products, if mixed, could cause chemical reactions that could damage the finish / Pulire nel senso della spazzolatura. In caso contrario, la finitura potrebbe graffiarsi. Non mescolare prodotti per la pulizia diversi tra loro: tali prodotti, se mescolati, potrebbero provocare reazioni chimiche che potrebbero danneggiare la finitura
246 GOLD PVD BRUSHED PVD (P005)	Scratchproof, high resistance / Antigraffio alta resistenza	Ethyl alcohol, specific glass cleaner, multifoam, isopropyl alcohol / Alcool etilico, detergente specifico per vetri, schiuma multi azione, alcool isopropilico	Unipol, solvent, bleach, chlorine products / Unipol, candeggina, prodotti a base di cloro	White sponge, microfibre cloth, paper cloth / Spugna bianca, panno in microfibra, panno di carta		
735 WARM BRONZE PVD (P037)	Scratchproof, high resistance / Antigraffio alta resistenza	Ethyl alcohol, specific glass cleaner, multifoam, isopropyl alcohol / Alcool etilico, detergente specifico per vetri, schiuma multi azione, alcool isopropilico	Unipol, solvent, bleach, chlorine products / Unipol, candeggina, prodotti a base di cloro	White sponge, microfibre cloth, paper cloth / Spugna bianca, panno in microfibra, panno di carta		Do not mix different cleaning products together: such products, if mixed, could cause chemical reactions that could damage the finish / Non mescolare prodotti per la pulizia diversi tra loro: tali prodotti, se mescolati, potrebbero provocare reazioni chimiche che potrebbero danneggiare la finitura
726 WARM BRONZE BRUSHED PVD (P024)	Scratchproof, high resistance / Antigraffio alta resistenza	Ethyl alcohol, specific glass cleaner, multifoam, isopropyl alcohol / Alcool etilico, detergente specifico per vetri, schiuma multi azione, alcool isopropilico	Unipol, solvent, bleach, chlorine products / Unipol, candeggina, prodotti a base di cloro	White sponge, microfibre cloth, paper cloth / Spugna bianca, panno in microfibra, panno di carta		Perform the cleaning in the direction of brushing. Otherwise, the finish may be scratched. Do not mix different cleaning products together: such products, if mixed, could cause chemical reactions that could damage the finish / Pulire nel senso della spazzolatura. In caso contrario, la finitura potrebbe graffiarsi. Non mescolare prodotti per la pulizia diversi tra loro: tali prodotti, se mescolati, potrebbero provocare reazioni chimiche che potrebbero danneggiare la finitura
727 BRASS BRUSHED PVD (P025)	Scratchproof, high resistance / Antigraffio alta resistenza	Ethyl alcohol, specific glass cleaner, multifoam, isopropyl alcohol / Alcool etilico, detergente specifico per vetri, schiuma multi azione, alcool isopropilico	Unipol, solvent, bleach, chlorine products / Unipol, candeggina, prodotti a base di cloro	White sponge, microfibre cloth, paper cloth / Spugna bianca, panno in microfibra, panno di carta		
710 BRASS PVD (P011)	Scratchproof, high resistance / Antigraffio alta resistenza	Ethyl alcohol, specific glass cleaner, multifoam, isopropyl alcohol / Alcool etilico, detergente specifico per vetri, schiuma multi azione, alcool isopropilico	Unipol, solvent, bleach, chlorine products / Unipol, candeggina, prodotti a base di cloro	White sponge, microfibre cloth, paper cloth / Spugna bianca, panno in microfibra, panno di carta		Do not mix different cleaning products together: such products, if mixed, could cause chemical reactions that could damage the finish / Non mescolare prodotti per la pulizia diversi tra loro: tali prodotti, se mescolati, potrebbero provocare reazioni chimiche che potrebbero danneggiare la finitura
720 NICKEL PVD (P014)	Scratchproof, high resistance / Antigraffio alta resistenza	Ethyl alcohol, specific glass cleaner, multifoam, isopropyl alcohol / Alcool etilico, detergente specifico per vetri, schiuma multi azione, alcool isopropilico	Unipol, solvent, bleach, chlorine products / Unipol, candeggina, prodotti a base di cloro	White sponge, microfibre cloth, paper cloth / Spugna bianca, panno in microfibra, panno di carta		

CLEANING GUIDELINES - FINISHES
LINEE GUIDA PER LA PULIZIA – FINITURE

GESSI®

GHRC FINISHES

FINISH FINITURA	PROPERTIES PROPRIETÀ	SUGGESTED PRODUCTS (*) PRODOTTI SUGGERITI (*)	PRODUCTS TO AVOID PRODOTTI DA EVITARE	CLEANING TOOLS AND CLOTHS (**) STRUMENTI E PANNI PER LA PULIZIA (**)	MAINTENANCE (***) MANUTENZIONE (***)	WARNINGS ACCORTEZZE
123 COPPER GHRC (G066) 	Fingerprint proof, Corrosion resistant, Easy to clean / A prova di impronte digitali, resistente alla corrosione, facile da pulire	Specific glass cleaner / Detergente specifico per vetri	Ethyl alcohol, degreaser, isopropyl alcohol, multifoam, unipol (paste), white sponge / Alcool etilico, sgrassatore, alcool isopropilico, schiuma multifuzione, unipol (pasta), spugna bianca	Microfibre cloth, paper cloth / Panno in microfibra, panno di carta	In order to prevent lime-scale stains, clean and dry the product properly with a soft cloth **right after each use**. In case of limescale stains, apply a solution of vinegar and water, then rinse and accurately dry with a cloth / Per evitare la formazione di macchie di calcare, pulire e asciugare accuratamente il prodotto con un panno morbido **subito dopo ogni uti-lizzo**. In caso di macchie di calcare, applicare una soluzione di acqua e aceto. Poi risciacquare e asciugare accuratamente con un panno	Perform the cleaning very softly / Pulire molto delica-tamente
124 BLACK METAL GHRC (G067) 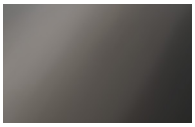	Fingerprint proof, Corrosion resistant, Easy to clean / A prova di impronte digitali, resistente alla corrosione, facile da pulire	Specific glass cleaner / Detergente specifico per vetri	Ethyl alcohol, degreaser, isopropyl alcohol, multifoam, unipol (paste), white sponge / Alcool etilico, sgrassatore, alcool isopropilico, schiuma multifuzione, unipol (pasta), spugna bianca	Microfibre cloth, paper cloth / Panno in microfibra, panno di carta	In order to prevent lime-scale stains, clean and dry the product properly with a soft cloth **right after each use**. In case of limescale stains, apply a solution of vinegar and water, then rinse and accurately dry with a cloth / Per evitare la formazione di macchie di calcare, pulire e asciugare accuratamente il prodotto con un panno morbido **subito dopo ogni uti-lizzo**. In caso di macchie di calcare, applicare una soluzione di acqua e aceto. Poi risciacquare e asciugare accuratamente con un panno	Perform the cleaning very softly / Pulire molto delica-tamente
125 COPPER BRUSHED GHRC (G063) 	Fingerprint proof, Corrosion resistant, Easy to clean / A prova di impronte digitali, resistente alla corrosione, facile da pulire	Specific glass cleaner / Detergente specifico per vetri	Ethyl alcohol, degreaser, isopropyl alcohol, multifoam, unipol (paste), white sponge / Alcool etilico, sgrassatore, alcool isopropilico, schiuma multifuzione, unipol (pasta), spugna bianca	Microfibre cloth, paper cloth / Panno in microfibra, panno di carta	In order to prevent lime-scale stains, clean and dry the product properly with a soft cloth **right after each use**. In case of limescale stains, apply a solution of vinegar and water, then rinse and accurately dry with a cloth / Per evitare la formazione di macchie di calcare, pulire e asciugare accuratamente il prodotto con un panno morbido **subito dopo ogni uti-lizzo**. In caso di macchie di calcare, applicare una soluzione di acqua e aceto. Poi risciacquare e asciugare accuratamente con un panno	Perform the cleaning in the direction of brushing. Other-wise, the finish may be scratched / Pulire molto delicatamente nel senso della spazzolatura. In caso contrario, la finitura potrebbe graffiarsi
126 BLACK METAL BRUSHED GHRC (G064) 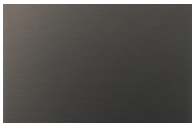	Fingerprint proof, scratchproof, Corrosion resistant, easy to clean / A prova di impronte digitali, antigraffio, resistente alla corrosione, facile da pulire	Specific glass cleaner / Detergente specifico per vetri	Ethyl alcohol, degreaser, isopropyl alcohol, multifoam, unipol (paste), white sponge / Alcool etilico, sgrassatore, alcool isopropilico, schiuma multifuzione, unipol (pasta), spugna bianca	Microfibre cloth, paper cloth / Panno in microfibra, panno di carta	In order to prevent lime-scale stains, clean and dry the product properly with a soft cloth **right after each use**. In case of limescale stains, apply a solution of vinegar and water, then rinse and accurately dry with a cloth / Per evitare la formazione di macchie di calcare, pulire e asciugare accuratamente il prodotto con un panno morbido **subito dopo ogni uti-lizzo**. In caso di macchie di calcare, applicare una soluzione di acqua e aceto. Poi risciacquare e asciugare accuratamente con un panno	Perform the cleaning in the direction of brushing. Other-wise, the finish may be scratched / Pulire molto delicatamente nel senso della spazzolatura. In caso contrario, la finitura potrebbe graffiarsi

WEBSITE TERMS & CONDITIONS OF USE

LEGAL NOTICE GESSI North America, INC.

Gessi North America, Inc.
704 North Valley Street, Suite E
Anaheim, California 92801
Voice 714.808.0099 – Fax 714.808.0973

Copyrights & Ownership of Intellectual Property

Gessi S.p.A. Parco Gessi, Vercelli (Italy) and its authorized North American distributor, Gessi North America Inc. reserves all rights for this Website, and owns the copyrights and intellectual property rights associated with the Site. This includes but is not limited to its design structure, logos, texts, pictures, sounds, animations and Site. Contents of this Website may not be copied, modified or distributed or made accessible to third parties without prior written consent. In some cases, copyrights for certain items on this Website belong to third parties. By giving access to this site, we do not intend to provide you a license or other interest in any intellectual property rights.

Trademarks

All Gessi trademarks, products descriptions and names on our Websites are protected under trademark law. This is particularly true of the brand name Gessi, Gessi logo and Gessi products names. The lack of identification of names and logos as trademarks cannot automatically be interpreted as meaning that they are not protected by applicable trademark law.

Accuracy of information and Control over Content

Gessi S.p.A. or its authorized North American distributor, Gessi North America Inc., shall not be held liable for any errors or modifications of information contained in this website. Gessi will not accept any liability for losses suffered directly or indirectly in connection with the use of this website.

Showroom Dealer Referral Disclaimer

Gessi S.p.A. or its authorized North American distributor, Gessi North America Inc., may list on its website, refer or supply information on where Gessi products may be purchased directly to the consumer or to the trade. All authorized Gessi showroom dealers are independent businesses. And as such, Gessi S.p.A. or Gessi North America shall not be held liable for any contractual disputes between the purchaser of Gessi products and its authorized showroom dealers regarding price, payments of merchandise, delivery, unethical conduct or acts of God. The purchaser is not under any obligation to acquire Gessi products from any specific referral by Gessi S.p.A. or Gessi North America, its independent sales agents or subsidiaries.

Internet Purchase and Unauthorized Sellers:

Gessi and its authorized North American distributor Gessi North America warns against buying its products from any reseller or retailer that is not an authorized Gessi reseller located within or outside the US and Canada. Sometimes the price(s) quoted may be lower in order to induce customers to purchase, especially in the case of Internet sales. However, products offered for sale by unauthorized resellers may be non-genuine Gessi products or may not be modified to US / Canadian standards, resulting in installation and performance-related problems.

ONLY GESSI PRODUCTS SOLD BY AUTHORIZED DEALERS AND RESELLERS IN THE UNITED STATES AND CANADA ARE COVERED BY THE GESSI WARRANTY.

To obtain warranty repair or replacement service, write to **Gessi North America, Inc.**
Please include in your letter
- date of purchase and installation
- model, serial number of product and description of affected part(s)
- description of the defect
- copy of original sales receipt (without a sales receipt Gessi will not honor this warranty; the warranty rights are not valid).

ANY MODIFICATION TO THE PRESENT WARRANTY IS VALID ONLY IF IN WRITING EXECUTED BY GESSI. GESSI AND GESSI North America's SALES PERSONELL AND /OR DISTRIBUTOR OR DEALERS MAY NOT MODIFY THIS WARRANTY IN ANY MANNER WHATSOEVER. GESSI AND GESSI North America RESERVE THE RIGHT TO MODIFY ITS PRODUCT(S) OFFERINGS AND WARRANTIES AT ANY TIME WITHOUT PRIOR NOTICE.

CARE & MAINTENANCE

Use Precautions / Maintenance / Suggestions

Cleaning recommendations for Gessi products:
Gessi products are manufactured with different materials to comply with the market needs, design and functionality.
• The surfaces of Gessi fittings are produced using the finest materials and manufacturing processes and are constantly improved by advanced quality assurance methods. To fully enjoy your Gessi products and to preserve their appearance, please note the following.
1. Water contains lime, to a greater or lesser extent, which is retained on the surface of the fitting, leaving deposits after the water has evaporated. You can prevent lime deposits forming and keep your fitting clean by always wiping the fitting dry immediately after use with a soft, dry cloth.
2. Do not to use detergents, solvents, chemical or abrasive agents, metallic sponges, alcohol, etc. to clean the surface of Gessi products: permanent damage to the surface of the product, its appearance and aesthetics, the brightness and the integrity of the finishing may be compromised. Clean only with a soft sponge and soapy water. Clean and properly dry the faucet in case of the presence of very hard water, whose deposits could damage the surface.
3. Periodically clean the filter of the aerator after unscrewing it and removing lime scale deposits that may obstruct the opening.

Cleaning instructions:
• Clean as and when required.
• The cleaning dosage and time the cleaner needs to take effect should be adjusted according to the product. Test cleaner on an inconspicuous part of the product before applying to the product
• Regular cleaning can prevent calcification.
• When using a spray cleaner, spray first into a cloth or sponge- never directly onto the product, as the spray could enter openings and gaps and causing damage
• After cleaning, rinse thoroughly with clean water to remove any residue.

IMPORTANT: residues of liquid soaps, shampoos and shower foams can also cause damage. Rinse with clean water after using. If the surface is already damaged, the effect of cleaning materials will cause further damage.

Precautions for Installation

• Before installing the faucet, flush the water supply lines of all debris.
• After installation, a plumber should check for any leakage, by leaving water running for two 15 -minute periods. After this procedure, it is suggested to inspect or have inspected the flexible supply hoses periodically for damage.
• Always turn water OFF on both hot and cold water supply lines before removing existing faucet or disassembling the valve. Open faucet handle to relieve water pressure and ensure that complete water shut – off has occurred.

Technical Data and Compliance Requirements

• Working pressure should not be lower than 0,5 bar (7,25 psi) and not be higher than 5 bar (72 Psi). In case of higher working pressure use a pressure reducer valve.
• Maximum test installation pressure: 8 bar (116 psi).
• Avoid major pressure differences between hot and cold water supply. Differences in pressure, water with high mineral content, and soapy substances can corrode the internal and external parts of the hoses and affect sealing joints, causing leakage.
• Maximum working temperature for Gessi products is 70 °C (158 °F).

FOR MORE DETAILED TECHNICAL INFORMATION, PLEASE REFER TO INSTALLATION INSTRUCTIONS INCLUDED IN THE PACKAGING OF EACH PRODUCT.

COMMERCIAL WARRANTY

MANUFACTURER'S LIMITED WARRANTY: COMMERCIAL WARRANTY

Gessi provides the following a limited warranty for commercial application of its products: Gessi warranties that its products shall be free from defects in finish, material and workmanship for a period of one (1) year from the date of commercial installation. Parts made of glass, porcelain or wood, and all finishes on lavatory and bath drains are excluded from this warranty.

Gessi warrants all widespread faucet ceramic disc valve cartridges and all other valves and to be free from defects in material and workmanship for a period of one (1) year from the date of installation.

This warranty does not include shipping cost for returning covered products for repairs or replacement under this limited warranty and labor or other cost incurred in connection with product removal or installation under this limited warranty.

Responsibility for compliance with local code requirements: since local code requirements vary greatly, distributors, retailers, dealers, installation contractors and users of plumbing products should determine whether there are any code restrictions on the installation or use of a specific product. This warranty does not apply in case of violation of local compliance rules.

THIS WARRANTY IS THE EXCLUSIVE COMMERCIAL WARRANTY GRANTED BY GESSI AND IS IN LIEU OF ALL OTHER WARRANTIES EXPRESSED OR IMPLIED, INCLUDING THE IMPLIED WARRANTY OF MERCHANTABILITY AND GESSI
North America OR FITNESS FOR A PARTICULAR PURPOSE.

THIS WARRANTY IS LIMITED SOLELY TO THE ABOVE AND THIS WARRANTY AND ANY WARRANTIES IMPLIED BY STATE LAW; IF ANY WILL APPLY ONLY FOR THE APPLICABLE WARRANTY PERIOD SPECIFIED HEREIN. GESSI AND ITS US AUTHORIZED DISTRIBUTOR GESSI North America WILL NOT BE LIABLE FOR ANY LOSS, DAMAGE, EXPENSE OR INCIDENTAL OR CONSEQUENTIAL DAMAGES OF ANY KIND, WHETHER BASED ON WARRANTY, CONTRACT OR NEGLIGENCE AND ARISING IN CONNECTION WITH THE SALE USE OR REPAIR OF GESSI PRODUCTS . SOME STATES DO NOT ALLOW THE EXCLUSION OR LIMITATION OF CONSEQUENTIAL DAMAGE OR LIMITATIONS O HOW LONG AN IMPLIED WARRANTY LASTS. AS A RESULT, IN CERTAIN STATES THE ABOVE LIMITATIONS OR EXCLUSIONS MAY NOT APPLY. THIS WARRANTY GIVES YOU SPECIFIC LEGAL RIGHTS, AND YOU MAY ALSO HAVE OTHER RIGHTS WHICH VARY FROM STATE TO STATE, UNLESS OTHERWISE CONTRARY TO STATE LAW GOVERNING THE PURCHASE, GESSI LIABILITY WILL NOT EXCEED THE CONTRACT PRICE FOR THE PRODUCT
CLAIMED TO BE COVERED UNDER A WARRANTY CLAIM.

For service under this warranty a claim should be made through the contractor or dealer from or through whom the covered product was purchased, or that a service request, including a description of the product model, of the defect and a request for RGA be sent to the following address

Gessi North America, Inc.
704 North Valley Street, Suite E
Anaheim, California 92801
Voice 714.808.0099 - Fax 714.808.0973

Please include in your letter:
- date of purchase and installation
- model, serial number of product and description of affected part(s)
- description of the defect
- copy of original sales receipt (without a sales receipt Gessi will not honor this warranty; the warranty rights are not valid).

APPLICABLE LAW

This warranty is governed by California without effect to its conflict of laws rules . If your purchase was made directly from Gessi S.p.A. the California Commercial Code applies and application of the UN Convention on International Sales of Goods is expressly excluded.

This is Gessi's exclusive commercial written warranty.

COMMERCIAL WARRANTY

Product Warnings and Recommendations

• DUE TO THE DESIGN OF SOME PARTS/PRODUCTS, SHARP EDGES MAY CAUSE INJURIES IF MISHANDLED OR TOUCHED.
• DO NOT LET CHILDREN PLAY WITH THE HANDLES OR LEVERS OF THE FAUCETS OR REVOLVING SPOUTS, HANDSPRAY. MISUSE SUCH AS CHILD' S PLAY MAY COMPROMISE THE CORRECT FUNCTION OF THE PRODUCTS OR RESULT IN BREAKAGE.
• DO NOT LEAVE CHILDREN UNATTENDED CLOSE TO BATH / SHOWER UNITS. SLIPPERY BATH/SHOWER FLOORS MAY RESULT IN SERIOUS INJURY INCLUDING CHILDREN OR ADULTS SLIPPING AND HITTING SHARP EDGES.
• OUR PRODUCTS HAVE SHARP EDGES: PLEASE HANDLE CAREFULLY TO AVOID POTENTIALLY SERIOUS INJURY.
• DO NOT LET FAUCETS DROP ON THE GROUND.
• DO NOT HIT FAUCETS WITH ANY OBJECT: ITS SURFACE AND THE SHAPE MAY BE DAMAGED.
• EXCESSIVE OR SUDDEN FORCE IN THE OPERATION OF THE LEVERS OF FAUCETS MAY BREAK THE INTERNAL COMPONENTS AND CAUSE CARTRIDGE LEAKS.
• KEEP YOUR PRODUCT SALE'S RECEIPT – MOUNTING INSTRUCTION AND THE WARRANTY – IN CASE OF DEFECT OR QUESTION. WITHOUT PURCHASE RECEIPTS WARRANTY CLAIMS WILL NOT BE HONORED.
• THE INSTRUCTIONS MANUAL SHOULD CAREFULLY READ BEFORE INSTALLATION AND THE INSTALLATION PROCEDURE PROVIDED THEREIN MUT BE PROPERLY FOLLOWED AND COMPLIED WITH
• ALL SHOWER UNITS EQUIPPED WITH A FLOW RESTRICTOR, PLEASE DO NOT REMOVE IT.
• WHEN YOU LEAVE HOME FOR MORE THAN ONE (1 DAY), REMEMBER TO SHUT OFF THE WATER MAIN SYSTEM – CHANGE IN PRESSURE MAY BREAK THE SUPPLY HOSES.
• USE ONLY ORIGINAL GESSI SPARE PARTS.
• DURING THE INSTALLATION THE USE OF EXCESSIVE FORCE SHOULD BE AVOIDED IN ORDER AVOID DAMAGES TO THE PRODUCT AND / OR ITS COMPONENTS AND PIECES. NEVER FORCE A COMPONENT OR PIECE INTO ANOTHER. NEVER FORCE SCREWS OR OVER TIGHTEN SCREWS.

Failure to follow the above warnings and recommendations may void your warranty.

CONSUMER WARRANTY

MANUFACTURER'S LIMITED WARRANTY: CONSUMER

RESIDENTIAL PRODUCTS

Warranty on Mechanical Parts

Gessi provides to the original purchaser of its products purchased and installed for residential application in the U.S. and Canada a limited lifetime warranty from the date of installation on all mechanical parts (except drains, for which only their chrome finishes are warranted) against manufacturing defects in material and workmanship under the terms and conditions set forth in this warranty.

Warranty on Valves and Cartridges

Gessi provides to the original purchaser of its valves purchased and installed for residential application in the U.S. and Canada the following limited warranties against manufacturing defects in material and workmanship during their normal North Americage: (1) ceramic disc valves carry a limited lifetime warranty; (2) single lever mixer cartridges: five (5) year limited warranty from the date of installation; (3) all other non-ceramic valve cartridges (pressure balance, thermostatic, diverter, etc.) are under a limited warranty for a two (2) year period from the date of installation.

Warranty on Finishes

Gessi provides to the original purchaser of its products a limited five (5) year warranty on all external plated finishes and a limited lifetime warranty on all PVD finishes from the date of installation for those faucets purchased and installed for residential application in the U.S. and Canada. Gloss staining and alkaline buildup may affect wear of the finish, over time and are not an indication of a defect, but of normal wear and tear; climate, atmospheric and other local conditions may increase normal wear. Products used under severe marine conditions and with heavy water are warranted for a period of one (1) year from the date of installation. All finishes on lavatoty and bath drains and product installed outdoors are excluded from this warranty. Any possible imperfection in the natural materials employed to manufacture Gessi products is not to be considered as a defect, but as a normal feature of Gessi products handwork.

Remedies under Warranty

Gessi (through its US distributor Gessi North America) will provide free of charge and at its sole option, replacement part(s) or product (or if no longer available, a comparable product) to replace those which have proven defective in materials or workmanship.
If you believe that you have a warranty claim for a Gessi product, the product must be returned to the dealer where originally purchased along with proof of purchase and a pertinent description of the problem and of your claim. A Return Goods Authorization ("RGA") Form must be requested and submitted to Gessi North America with an approved RGA number assigned by Gessi North America together with proper documentation for all warranty claims.

This warranty applies to the original consumer owner; IT DOES NOT COVER INSTALLATION OR ANY OTHER LABOR CHARGES AND SHALL NOT APPLY TO ANY PRODUCTS OR PARTS OF PRODUCTS WHEN:

• the repairs and/or installations covering the products were not made by an authorized licensed installer or were negligently performed, and/or Gessi spare parts, or parts that have been altered in any manner were used, unless previously approved in writing by Gessi North America; or sales receipt (without a sales receipt Gessi will not honor this warranty; the warranty rights are not valid).
• the covered products were damaged as a result of misuse, negligence, accident or faulty installation or maintenance performed by a plumber, contractor, service provider or member of the purchaser's household; or,
• the covered products were installed or used in a manner contrary to the product's printed instructions or this warranty's Instructions for filing a claim were not followed by the consumer; or,
• the covered products were damaged by the effects of severe air or water conditions, dirt, limescale or harsh, abrasive or aggressive cleaners and/or materials; or,
• the covered products were damaged as a result of conditions, malfunctions or defects derived from normal wear and tear; or,
• the covered products were damaged by ice and/or impurities present in water pipes; or,
• the covered products were used as a tool, hammer for any purpose other the one it has been designed for; or,
• electric cables were attached to the products; or,
• the warranty claim on the covered product(s) resulting from filter taps not being installed in the main water system or not installed before the supply hoses of the faucet.

CONSUMER WARRANTY

THIS WARRANTY IS THE SOLE AND EXCLUSIVE WARRANTY GRANTED BY GESSI AND IS IN LIEU OF ALL OTHER WARRANTIES EXPRESSED OR IMPLIED, INCLUDING THE IMPLIED WARRANTY OF MERCHANTABILITY AND GESSI North America OR FITNESS FOR A PARTICULAR PURPOSE, AND IS LIMITED TO DEFECTIVE PARTS REPLACEMENT ONLY. THE FOREGOING WARRANTIES ARE IN LIEU OF ALL OTHER WARRANTIES EXPRESS OR IMPLIED, INCLUDING BUT NOT LIMITED TO THE IMPLIED WARRANTIES OF MERCHANTABILITY AND FITNESS FOR A PARTICULAR PURPOSE.

THIS WARRANTY IS LIMITED SOLELY TO THE ABOVE AND THIS WARRANTY AND ANY WARRANTIES IMPLIED BY STATE LAW; IF ANY WILL APPLY ONLY FOR THE APPLICABLE WARRANTY PERIOD SPECIFIED HEREIN. GESSI AND ITS US AUTHORIZED DISTRIBUTOR GESSI North America WILL NOT BE LIABLE FOR ANY LOSS, DAMAGE, EXPENSE OR INCIDENTAL OR CONSEQUENTIAL DAMAGES OF ANY KIND, WHETHER BASED ON WARRANTY, CONTRACT OR NEGLIGENCE AND ARISING IN CONNECTION WITH THE SALE USE OR REPAIR OF GESSI PRODUCTS . SOME STATES DO NOT ALLOW THE EXCLUSION OR LIMITATION OF CONSEQUENTIAL DAMAGE OR LIMITATIONS ON HOW LONG AN IMPLIED WARRANTY LASTS. AS A RESULT, IN CERTAIN STATES THE ABOVE LIMITATIONS OR EXCLUSIONS MAY NOT APPLY. THIS WARRANTY GIVES YOU SPECIFIC LEGAL RIGHTS, AND YOU MAY ALSO HAVE OTHER RIGHTS WHICH VARY FROM STATE TO STATE, UNLESS OTHERWISE CONTRARY TO STATE LAW GOVERNING THE PURCHASE, GESSI LIABILITY WILL NOT EXCEED THE CONTRACT PRICE FOR THE PRODUCT CLAIMED TO BE COVERED UNDER A WARRANTY CLAIM.

For service under this warranty, a request should be made through the contractor or dealer from whom the product was purchased, or a service request (including a description of the product model and nature of the defect with a request for a RGA) be sent to the following address:

Gessi North America, Inc.
704 North Valley Street, Suite E
Anaheim, California 92801
Voice 714.808.0099 - Fax 714.808.0973

Please include in your letter:
- date of purchase and installation
- model, serial number of product and description of affected part(s)
- description of the defect
- copy of the original sales receipt (without a sales receipt this warranty will not be honored).

APPLICATION
If your purchase was made directly from Gessi S.p.A. the UCC applies and application of the UN Convention on International Sales of Goods is expressly excluded.

This is the Gessi exclusive written warranty to the consumer.

GENERAL TERMS AND CONDITIONS OF SALE - GESSI NORTH AMERICA

1. APPLICABILITY

1.1. These general terms and conditions of sale (the "General Conditions") shall form a binding contract between:

(i) "Gessi" meaning Gessi North America with its registered office in 704 N. Valley St. Suite E, Anaheim, (Ca) 92801 U.S.A., and

(ii) the "Buyer" meaning the professional reseller agreeing to proceed with the purchase of Gessi's products (the "Products") after receiving these General Conditions.

(collectively the "Parties")

1.2. By agreeing to proceed with the purchase of Gessi's products (the "Products") after receiving these General Conditions, for example by accepting the delivery or by making a payment, the Buyer accepts these General Conditions under art. 1327 of the Italian Civil Code. Following such acceptance of these General Conditions, they shall govern all the Orders placed by the Buyer (the "Orders"). The Orders accepted by Gessi are deemed binding contracts of sale which cannot be terminated unilaterally by the Buyer. Such accepted Orders and these General Conditions shall constitute the entire agreement between the Parties (the "Agreement").

1.3. These General Conditions shall prevail over any general conditions presented to Gessi by the Buyer, either in the purchase orders or otherwise, unless expressly accepted in writing by Gessi. These General Conditions are governed by the laws of Italy.

1.4. Gessi reserves the right, at its sole discretion, to modify the General Conditions from time to time. Any such change shall take effect upon communicating them to the Buyer.

1.5. The resolution, invalidity, or ineffectiveness of one (or part of) a clause or any provision of the Agreement shall not in any way result in the termination, invalidity, or ineffectiveness in part or in whole of any other clause or provision of the Agreement.

2. PRICES AND PAYMENT

2.1. The prices indicated on this price list (the "Price List") are V.A.T. excluded and they are expressed in USD. In the course of the business relationship with the Buyer, Gessi may communicate to the latter changes in price. Gessi and the Buyer may agree on the specific discounts relating to the distribution services of the Buyer.

2.2. Gessi reserves the right to change the Price List, for example, by making changes to the Products and/or even eliminating the same model from this Price List, at any time and at its sole discretion, without any obligation to give prior notice to the Buyer.

2.3. The payments become due with the expiration date of the relevant invoice of Gessi and shall not be retained by the Buyer under any circumstances. In particular, any delays in delivery or other conduct of Gessi that the Buyer believes constitutes a default of Gessi shall not constitute grounds for any delay in the payments due.

2.4. In case of any delay in the payment due, Gessi reserves the right to charge default interest under Legislative Decree no. 231/2002 as amended, without prejudice in any case to the applicable legal limits.

3. RETENTION OF TITLE

The ordered Products shall remain the property of Gessi until the relevant Order is entirely paid up by the Buyer and/or in the case of an extended payment, if such was agreed upon by Gessi. For that purpose, the Buyer shall cooperate with Gessi to protect Gessi's ownership. The above is without prejudice to the fact that the risks of losing or damaging the Products shall pass to the Buyer from the moment the Products are delivered to the Buyer under Section 4.1. hereof.

4. SHIPMENT AND DELIVERY

4.1. 4.1. Unless otherwise expressly agreed upon by the Parties, the delivery shall be EXW (Incoterms 2010) Gessi's headquarters, Italy.

4.2. Upon delivery of the ordered Products, the Buyer shall check (i) if the delivery is complete; and (ii) the packaging of the Products. The Buyer shall report on a delivery report that must also be signed by the person delivering the Order to the Buyer and sent to Gessi, any default of delivery, indicating any error in the quantity or kind of the Products delivered or any damage to the packaging.

4.3. Unless otherwise expressly agreed upon by the Parties, within 14 calendar days from the delivery, the Buyer shall also (i) verify whether the Products were delivered in good shape; (ii) duly document any possible defects of production in the Products, with photographs and/or videos showing clearly such defects; and (iii) report any such defects to Gessi, via email at the mail address of your commercial referent (the reception of which should be confirmed by Gessi), fax, or registered letter, including a detailed description of the default and the documentation proving the default. The Buyer shall make the Products available for inspection

or, if requested by Gessi, resend the Products to Gessi at Gessi's cost (if Gessi confirms the Buyer's claims) for its inspection when Gessi believes it is necessary.

4.4. If the Buyer does not raise any objection to the delivery and/or to the ordered Products according to the provisions of the above Sections 4.2. and 4.3., such delivery and ordered Products shall be considered, regarding visible defects, delivered in expected quantity and quality, in good shape, and the Buyer shall not be entitled to raise any further objections in that regard unless otherwise provided for by applicable law. The above is without prejudice to Gessi's warranty obligations. It is understood that neither these General Conditions nor Gessi's warranty shall prejudice any imperative guarantees provided by applicable laws..

5. DESTINATION OF PRODUCTS

5.1. The Parties agree that if the sale of the Products in the country indicated by the Buyer as the country of destination of the Products and/or in the country in which the Buyer headquarters is located becomes (or it comes to Gessi's knowledge that it has been) restricted by or would infringe any applicable regulations (the "Restrictions") and unless the Restrictions are withdrawn, the relevant Orders will be cancelled by Gessi under art. 1456 of the Italian Civil Code, without the possibility to change the destination of the shipment and Gessi may, at its sole discretion, choose to (i) refund the payments already obtained from the Buyer for such cancelled Orders, (ii) and/or give credit to the Buyer for the Products that are not restricted, subject to availability. Under no circumstances shall the Buyer have the right to request Gessi to supply the Products to the countries which are covered by the relevant Restrictions and/or which may be used to circumvent such Restrictions, being Gessi a manufacturer dedicated to scrupulous compliance with all the applicable laws, including also the legislation regarding the Restrictions. In the event of a violation of Article 12g of Regulation (EU) No. 833/2014, Gessi, in addition to the right to cancel Orders, may withdraw from the Agreement and shall have the right to request reimbursement of the expenses incurred in relation to the Agreement that led to the violation, as well as compensation for damages. In any case, Gessi commits to notifying the competent Authorities in the event of a violation of the prohibition set forth in this Section.

5.2. The Buyer acknowledges that the Products may be dedicated to certain territories where local laws provide different requirements than other territories and/or where the sanitary structure differs from other countries. The Buyer shall always resell the Products within the territories for which the Products are destined to ensure they comply with local laws. This is without prejudice to any laws (also including EU laws) prohibiting limitations of the resale territories.

6. ORDER CANCELLATIONS AND RETURNS

Orders placed, confirmed and/or delivered may be cancelled or returned subject to Gessi's policies. For information on such policies, the Buyer shall contact the Customer Service of Gessi, via email at cs.northamerica@gessi.com.

7. WARRANTIES OF GESSI

7.1. Gessi warrants that the Products will correspond with their technical specifications, subject to reasonable tolerances generally accepted in the trade and will be free from defects in material and workmanship at the time of delivery.

7.2. Gessi does not warrant that the Products will be compatible with local laws and appliances worldwide. For this reason, the warranty is valid only and exclusively for all countries for which the Product sold to the Buyer is destined, without prejudice, in any case, to the provisions of the applicable laws.

8. USE OF GESSI'S INTELLECTUAL PROPERTY RIGHTS BY THE BUYERS

8.1. The Buyer acknowledges that all copyrights, industrial designs, patents, trademarks, service marks, logos, commercial names, trade names, domain names and/or slogans, whether registered or unregistered and all other intellectual property rights protected under different jurisdictions (the "Intellectual Property Rights") held or in any case operated by Gessi and/or by its subsidiaries and affiliates are owned by or licensed to Gessi and/or its subsidiaries and affiliates, granting them an exclusive right to use and benefit from such Intellectual Property Rights and the Buyer does not acquire any such rights hereunder.

8.2. During the Parties' business relationship and after its end, the Buyer shall not produce the Products or any other products similar to or imitating the Products or in any other way infringe Gessi's Intellectual Property Rights and/or act in any other way to the detriment of the goodwill of Gessi.

8.3. The Buyer shall not use letterhead, calling cards, signage (also in the e-mail correspondence with clients and other third parties) or other representations in the name of Gessi or any of its subsidiaries or to represent itself as Gessi or as a part of Gessi's team or as any of its subsidiaries without the express, written permission of Gessi.

8.4. The Buyer shall market, distribute and sell the Products only under the trademarks, logos, commercial names and other distinctive signs (the "Trademarks") of Gessi and not under any other Trademark. The Buyer shall not remove any Trademarks of Gessi from the Products and/or their packaging without Gessi's written consent. Any such removal, distortion and/or change of

the Trademarks of Gessi or technical data or labels delivered with the Products or otherwise provided by Gessi shall be considered an infringement of the Intellectual Property Rights of Gessi.

8.5. It is understood and agreed by the Buyer that Gessi does not grant the Buyer any licence to use the Trademarks of Gessi, or its other materials provided to the Buyer by Gessi, otherwise than as necessary for the promotion of the Products and following strictly the indications of Gessi.

8.6. The Buyer shall not alter any Trademarks or Products of Gessi without the latter's prior written consent. The Buyer acknowledges that if, during the effectiveness of this Agreement, changes to the Products, designs, Trademarks, promotional materials and/or other Intellectual Property of Gessi become necessary, Gessi will remain, in any case, the exclusive owner of all such modified Intellectual Property Rights.

8.7. The Buyer shall not attempt to register any of the Intellectual Property Rights of Gessi. Furthermore, the Buyer shall not attempt to register or even use any other Trademarks or designs confusingly similar to the Intellectual Property Rights of Gessi (also if they are not registered).

8.8. The Buyer shall conduct business in a manner that always reflects favourably on the Products and the reputation of Gessi.

8.9. Any commercial use of the Intellectual Property Rights of Gessi by the Buyer other than strictly permitted under this Agreement is prohibited.

8.10. The Buyer shall immediately report to Gessi any actual or potential infringements of the Intellectual Property rights of Gessi and shall cooperate with Gessi in protecting such Intellectual Property Rights according to Gessi's instructions.

8.11. Gessi may adopt selective forms of distribution that will first be agreed upon between the parties.

9. CODE OF CONDUCT AND POLICY

The Buyer shall comply with Gessi's code of conduct and all Gessi's policies applicable to the Buyer, which can be found on Gessi's official website: https://www.gessi.com/.

10. CONFIDENTIALLY

The Buyer acknowledges and agrees that, during the business relationship with Gessi and after its expiry, all documentation and confidential business information, in whatever form or media, disclosed by Gessi to or known by the Buyer orally or in writing as a consequence of or through the Buyer's relationship with Gessi and which is not generally known to the public, including but not limited to, correspondence with Gessi, information concerning Gessi's products, finances, processes and services, clients, purchasing, test results, technology and technical information, accounting, manufacturing, distribution and marketing ("Information"), shall remain the sole and exclusive property of Gessi, shall be held in strict confidence by the Buyer, and shall not be published, disclosed, disseminated or used by the Buyer in any manner, except as expressly permitted hereunder. The Buyer may not reproduce or copy the Information, in whole or in part, and must return or destroy the Information upon the expiration or other termination of this Agreement. In addition, the Buyer shall safeguard such Information and ensure that only the Buyer's employees, officers and directors who need access to the Information for purposes of performing the Buyer's obligations under this Agreement will be given such access and all such employees, and officers and directors will comply with the confidentiality and non-use obligations set forth herein. It also complies with Gessi's codes of conduct and policies.